ENGINE

CONTENTS

Engine Mechanical 6A–1
Engine Cooling 6B–1
Engine Fuel 6C–1
Engine Electrical 6D1–1
Ignition System 6D2–1
Starting and Charging System 6D3–1
Driveability and Emissions 6E–1
Engine Exhaust 6F–1
Engine Lubrication 6G–1
Engine Speed Control System 6H–1
Induction 6J–1

ENGINE MECHANICAL (6VD1 3.2L)

CONTENTS

Service Precaution 6A–2
General Description 6A–3
Engine Diagnosis 6A–4
Cylinder Head Cover LH 6A–17
Removal 6A–17
Installation 6A–18
Cylinder Head Cover RH 6A–19
Removal 6A–19
Installation 6A–19
Common Chamber 6A–20
Removal 6A–20
Installation 6A–20
Exhaust Manifold LH 6A–22
Removal 6A–22
Installation 6A–22
Exhaust Manifold RH 6A–23
Removal 6A–23
Installation 6A–23
Crankshaft Pulley 6A–24
Removal 6A–24
Installation 6A–24
Timing Belt 6A–25
Removal 6A–25
Installation 6A–26
Camshaft 6A–30
Removal 6A–30
Installation 6A–31
Cylinder Head 6A–33
Removal 6A–33
Installation 6A–33
Valve Stem Oil Controller , Valve Spring and Valve Guide 6A–35
Removal 6A–35
Installation 6A–35
Piston, Piston Ring and Connecting Rod . . . 6A–36
Removal 6A–36
Installation 6A–37
Crankshaft and Main Bearings 6A–38
Removal 6A–38
Installation 6A–39
Rear Oil Seal 6A–43
Removal 6A–43
Installation 6A–43
Engine Assembly 6A–44
Removal 6A–44
Installation 6A–45
Cylinder Head 6A–48
Cylinder Head and Associated Parts 6A–48
Disassembly 6A–48
Clean 6A–49
Inspection and Repair 6A–49
Reassembly 6A–50
Valve Spring, Oil Controller, Valve, Valve Guide 6A–52
Valve Spring, Oil Controller, Valve, Valve Guide and Associated Parts 6A–52
Disassembly 6A–52
Inspection and Repair 6A–53
Reassembly 6A–56
Camshaft 6A–59
Camshaft and Associated Parts 6A–59
Disassembly 6A–59
Inspection and Repair 6A–60
Reassembly 6A–62
Crankshaft 6A–65
Crankshaft and Associated Parts 6A–65
Disassembly 6A–65
Inspection and Repair 6A–66
Inspection and Repair 6A–67
Reassembly 6A–69
Piston and Connecting Rod 6A–73

Piston, Connecting Rod and Associate Parts 6A–73
Disassembly 6A–73
Inspection and Repair 6A–74
Reassembly 6A–78
Cylinder Block 6A–81
Cylinder Block and Associated Parts 6A–81
Disassembly 6A–81
Inspection and Repair 6A–82
Reassembly 6A–83
Main Data and Specification 6A–86
Special Tool 6A–92

Service Precaution

WARNING: THIS VEHICLE HAS A SUPPLEMENTAL RESTRAINT SYSTEM (SRS). REFER TO THE SRS COMPONENT AND WIRING LOCATION VIEW IN ORDER TO DETERMINE WHETHER YOU ARE PERFORMING SERVICE ON OR NEAR THE SRS COMPONENTS OR THE SRS WIRING. WHEN YOU ARE PERFORMING SERVICE ON OR NEAR THE SRS COMPONENTS OR THE SRS WIRING, REFER TO THE SRS SERVICE INFORMATION. FAILURE TO FOLLOW WARNINGS COULD RESULT IN POSSIBLE AIR BAG DEPLOYMENT, PERSONAL INJURY, OR OTHERWISE UNNEEDED SRS SYSTEM REPAIRS.

CAUTION: Always use the correct fastener in the proper location. When you replace a fastener, use ONLY the exact part number for that application. ISUZU will call out those fasteners that require a replacement after removal. ISUZU will also call out the fasteners that require thread lockers or thread sealant. UNLESS OTHERWISE SPECIFIED, do not use supplemental coatings (Paints, greases, or other corrosion inhibitors) on threaded fasteners or fastener joint interfaces. Generally, such coatings adversely affect the fastener torque and the joint clamping force, and may damage the fastener. When you install fasteners, use the correct tightening sequence and specifications. Following these instructions can help you avoid damage to parts and systems.

General Description

Engine Cleanliness And Care

An automobile engine is a combination of many machined, honed, polished and lapped surfaces with tolerances that are measured in the thousandths of a millimeter (ten thousandths of an inch). Accordingly, when any internal engine parts are serviced, care and cleanliness are important. Throughout this section, it should be understood that proper cleaning and protection of machined surfaces and friction areas is part of the repair procedure. This is considered standard shop practice even if not specifically stated.

- A liberal coating of engine oil should be applied to all friction areas during assembly to protect and lubricate the surfaces on initial operation.
- Whenever valve train components, pistons, piston rings, connecting rods, rod bearings, and crankshaft journal bearings are removed for service, they should be retained in order.
- At the time of installation, they should be installed in the same locations and with the same mating surfaces as when removed.
- Battery cables should be disconnected before any major work is performed on the engine. Failure to disconnect cables may result in damage to wire harness or other electrical parts.
- The six cylinders of this engine are identified by numbers; Right side cylinders 1, 3 and 5, Left side cylinders 2, 4 and 6, as counted from crankshaft pulley side to flywheel side.

General Information on Engine Service

The following information on engine service should be noted carefully, as it is important in preventing damage and contributing to reliable engine performance.

- When raising or supporting the engine for any reason, do not use a jack under the oil pan. Due to the small clearance between the oil pan and the oil pump strainer, jacking against the oil pan may cause damage to the oil pick–up unit.
- The 12–volt electrical system is capable of damaging circuits. When performing any work where electrical terminals could possibly be grounded, the ground cable of the battery should be disconnected at the battery.
- Any time the intake air duct or air cleaner is removed, the intake opening should be covered. This will protect against accidental entrance of foreign material into the cylinder which could cause extensive damage when the engine is started.

Cylinder Block

The cylinder block is made of aluminum die–cast casting for 75˚V–type six cylinders. It has a rear plate integrated structure and employs a deep skirt. The cylinder liner is cast and the liner inner diameter and crankshaft journal diameter are classified into grades. The crankshaft is supported by four bearings of which width is different between No.2, No.3 and No.1, No.4; the width of No.3 bearing on the body side is different in order to support the thrust bearing. The bearing cap is made of nodular cast iron and each bearing cap uses four bolts and two side bolts.

Cylinder Head

The cylinder head, made of aluminum alloy casting employs a pent–roof type combustion chamber with a spark plug in the center. The intake and exhaust valves are placed in V–type design. The ports are cross–flow type.

Valve Train

Intake and exhaust camshaft on the both side of banks are driven through an camshaft drive gear by timing belt. The valves are operated by the camshaft and the valve clearance is adjusted to select suitable thickness shim.

Intake Manifold

The intake manifold system is composed of the aluminum cast common chamber and intake manifold attached with six fuel injectors.

Exhaust Manifold

The exhaust manifold is made of nodular cast iron.

Pistons and Connecting Rods

Aluminum pistons are used after selecting the grade that meets the cylinder bore diameter. Each piston has two compression rings and one oil ring. The piston pin made of chromium steel is offset 1mm toward the thrust side, and the thrust pressure of piston to the cylinder wall varies gradually as the piston travels. The connecting rods are made of forged steel. The connecting rod bearings are graded for correct size selection.

Crankshaft and Bearings

The crankshaft is made of Ductile cast–iron. Pins and journals are graded for correct size selection for their bearing.

Engine Control Module (ECM)

The ECM location is on the common charmber.

Engine Diagnosis

Hard Starting

1. Starting Motor Does Not Turn Over

Troubleshooting Procedure

Turn on headlights and starter switch.

Condition	Possible cause	Correction
Headlights go out or dim considerably	Battery run down or under charged	Recharge or replace battery
	Terminals poorly connected	Clean battery posts and terminals and connect properly
	Starting motor coil circuit shorted	Overhaul or replace
	Starting motor defective	Overhaul or replace

2. Ignition Trouble — Starting Motor Turns Over But Engine Does Not Start

Spark Test

Disconnect an ignition coil from any spark plug. Connect the spark plug tester 5–8840–0383–0, start the engine, and check if a spark is generated in the spark plug tester. Before starting the engine, make sure that the spark plug tester is properly grounded. To avoid electrical shock, do not touch the part where insulation of the ignition coil is broken while the engine is running.

Condition	Possible cause	Correction
Spark jumps across gap	Spark plug defective	Clean, adjust spark gap or replace
	Ignition timing incorrect	Refer to Ignition System
	Fuel not reaching fuel injector(s) or engine	Refer to item 3 (Trouble in fuel system)
	Valve timing incorrect	Adjust
	Engine lacks compression	Refer to item 4 (Engine lacks compression)
No sparking takes place	Ignition coil disconnected or broken	Connect properly or replace
	Electronic Ignition System with module	Replace
	Poor connections in engine harness	Correct
	Engine Control Module cable disconnected or defective	Correct or replace

3. Trouble In Fuel System

Condition	Possible cause	Correction
Starting motor turns over and spark occurs but engine does not start.	Fuel tank empty	Fill
	Water in fuel system	Clean
	Fuel filter clogged	Replace filter
	Fuel pipe clogged	Clean or replace
	Fuel pump defective	Replace
	Fuel pump circuit open	Correct or replace
	Evaporative Emission Control System circuit clogged	Correct or replace
	Multiport Fuel Injection System faulty	Refer to “Electronic Fuel Injection” section

4. Engine Lacks Compression

Condition	Possible cause	Correction
Engine lacks compression	Spark plug loosely fitted or spark plug gasket defective	Tighten to specified torque or replace gasket
	Valve timing incorrect	Adjust
	Cylinder head gasket defective	Replace gasket
	Valve incorrectly seated	Lap valve
	Valve stem seized	Replace valve and valve guide
	Valve spring weakened or broken	Replace
	Cylinder or piston rings worn	Overhaul engine
	Piston ring seized	Overhaul engine.

Engine Compression Test Procedure

1. Start and run the engine until the engine reaches normal operating temperature.
2. Turn the engine off.
3. Remove all the spark plugs.
4. Remove ignition coil fuse (15A) and disable the ignition system.
5. Remove the fuel pump relay from the relay and fuse box.
6. Engage the starter and check that the cranking speed is approximately 300 rpm.
7. Install cylinder compression gauge into spark plug hole.
8. With the throttle valve opened fully, keep the starter engaged until the compression gage needle reaches the maximum level. Note the reading.
9. Repeat the test with each cylinder.
   If the compression pressure obtained falls below the limit, engine overhaul is necessary.

Limit; 1000 kPa (145 psi)

Rough Engine Idling or Engine Stalling

Condition	Possible cause	Correction
Trouble in fuel injection system	Idle air control valve defective	Replace
	Throttle shutting off incomplete	Correct or replace
	Throttle position sensor circuit open or shorted	Correct or replace
	Fuel injector circuits open or shorted	Correct or replace
	Fuel injectors damaged	Replace
	Fuel pump relay defective	Replace
	Mass Airflow Sensor circuit open or poor connections	Correct or replace
	Mass Airflow Sensor defective	Replace
	Manifold Absolute Pressure Sensor circuit open or poor connections	Correct or replace
	Manifold Absolute Pressure Sensor defective	Replace
	Engine Coolant Temperature Sensor circuit open or poor connections	Correct or replace
	Engine Coolant Temperature Sensor defective	Replace
	Intake Air Temperature sensor circuit open or poor connections	Correct or replace
	Intake Air Temperature sensor defective	Replace
	Vehicle Speed Sensor circuit open or shorted	Correct or replace
	Vehicle Speed Sensor defective	Replace
Trouble in emission control system	Engine Control Module defective	Replace
	Canister purge valve circuit open or poor connections	Correct or replace
	Canister purge valve defective	Replace
	Evaporative Emission Canister Purge control valve defective	Replace
	Trouble in ignition system	Refer to “Hard Start”
Others	Engine lacks compression	Refer to “Hard Start”
	Valve incorrectly seated	Lap valve
	Air Cleaner Filter clogged	Replace filter element
	Valve timing incorrect	Readjust
	Idle air control valve broken	Replace
	Fast idle solenoid defective	Replace
	Positive Crankcase Ventilation valve defective or clogged	Replace

Rough Engine Running

Condition	Possible cause	Correction
Engine misfires periodically	Ignition coil layer shorted	Replace
	Spark plugs fouling	Clean or install hotter type plug
	Spark plug(s) insulator nose leaking	Replace
	Fuel injector(s) defective	Replace
	Engine control module faulty	Replace
Engine knocks periodically	Spark plugs running too hot	Install colder type spark plugs
	Engine control module faulty	Replace
Engine lacks power	Spark plugs fouled	Clean
	Fuel injectors defective	Replace
	Mass Airflow Sensor or Intake Airflow Sensor circuit defective	Correct or replace
	Barometric Pressure (BARO) Sensor or Barometric Pressure Sensor circuit defective	Correct or replace
	Engine Coolant Temperature Sensor or Engine Coolant Temperature Sensor circuit defective	Correct or replace
	Engine Control Module faulty	Replace
	Intake Air Temperature Sensor or Intake Air Temperature Sensor circuit defective	Correct or replace
	Throttle Position Sensor or Throttle Position Sensor circuit defective	Correct or replace

Hesitation

Condition	Possible cause	Correction
Hesitation on acceleration	Throttle Position Sensor adjustment incorrect	Replace throttle valve assembly
	Throttle Position Sensor circuit open or shorted	Correct or replace
	Excessive play in accelerator linkage	Adjust or replace
	Mass Airflow Sensor circuit open or poor connections	Correct or replace
	Mass Airflow Sensor defective	Replace
	Barometric Pressure (BARO) Sensor circuit open or shorted	Correct or replace
	BARO Sensor defective	Replace
	Intake Air Temperature (IAT) Sensor circuit open or poor connections	Correct or replace
	IAT Sensor defective	Replace
Hesitation at high speeds (Fuel pressure too low)	Fuel tank strainer clogged	Clean or replace
	Fuel pipe clogged	Clean or replace
	Fuel filter clogged	Replace
	Defective fuel pump system	Check and replace
	Fuel Pressure Control Valve leaking	Replace
Hesitation at high speeds (Fuel injector not working normally)	Power supply or ground circuit for Multiport Fuel Injection System shorted or open	Check and correct or replace
	Fuel Injector defective	Replace
	Cable of Multiport Fuel Injection System circuit open or poor connections	Correct or replace
Hesitation at high speeds	Engine Control Module defective	Replace
	Throttle Position Sensor cable broken or poor connections	Correct or replace
	Throttle Position Sensor defective	Replace
	Engine Coolant Temperature Sensor circuit open or shorted	Correct or replace
	Engine Coolant Temperature Sensor defective	Replace
	Mass Airflow Sensor circuit open or poor connections	Correct or replace
	Mass Airflow Sensor defective	Replace
	MAP Sensor cable broken or poor connections	Correct or replace
	MAP Sensor defective	Replace
	IAT Sensor circuit open or poor connections	Correct or replace
	IAT Sensor defective	Replace
	Throttle valve not fully opened	Check and correct or replace
	Air Cleaner Filter clogged	Replace filter element
	Power supply voltage too low	Check and correct or replace

Engine Lacks Power

Condition	Possible cause	Correction
Trouble in fuel system	Fuel Pressure Control Valve not working normally	Replace
	Fuel injector clogged	Clean or replace
	Fuel pipe clogged	Clean
	Fuel filter clogged or fouled	Replace
	Fuel pump drive circuit not working normally	Correct or replace
	Fuel tank not sufficiently breathing due to clogged Evaporative Emission Control System circuit	Clean or replace
	Water in fuel system	Clean
	Inferior quality fuel in fuel system	Use fuel of specified octane rating
	Engine Control Module supplied poor voltage	Correct circuit
	Throttle Position Sensor cable broken or poor connections	Correct or replace
	Throttle Position Sensor defective	Replace
	Mass Airflow Sensor not working normally	Replace
	Manifold Absolute Pressure Sensor not working normally	Replace
	Intake Air Temperature Sensor not working normally	Replace
	Engine Coolant Temperature Sensor circuit open or shorted	Correct or replace
	Engine Coolant Temperature Sensor defective	Replace
	Engine Control Module defective	Replace
Trouble in intake or exhaust system	Air Cleaner Filter clogged	Replace filter element
	Air duct kinked or flattened	Correct or replace
Ignition failure	———	Refer to Hard Start Troubleshooting Guide
	Heat range of spark plug inadequate	Install spark plugs of adequate heat range
	Ignition coil defective	Replace

Condition	Possible cause	Correction
Engine overheating	Level of Engine Coolant too low	Replenish
	Fan clutch defective	Replace
	Thermostat defective	Replace
	Engine Coolant pump defective	Correct or replace
	Radiator clogged	Clean or replace
	Radiator filler cap defective	Replace
	Level of oil in engine crankcase too low or wrong engine oil	Change or replenish
	Resistance in exhaust system increased	Clean exhaust system or replace defective parts
	Throttle Position Sensor adjustment incorrect	Replace with Throttle Valve ASM
	Throttle Position Sensor circuit open or shorted	Correct or replace
	Cylinder head gasket damaged	Replace
Engine overcooling	Thermostat defective	Replace (Use a thermostat set to open at 82˚C (180˚F))
Engine lacks compression	————	Refer to Hard Start
Others	Tire inflation pressure abnormal	Adjust to recommended pressures
	Brake drag	Adjust
	Clutch slipping	Adjust or replace
	Level of oil in engine crankcase too high	Correct level of engine oil

Engine Noisy

Abnormal engine noise often consists of various noises originating in rotating parts, sliding parts and other moving parts of the engine. It is, therefore, advisable to locate the source of noise systematically.

Condition	Possible cause	Correction
Noise from crank journals or from crank bearings (Faulty crank journals and crank bearings usually make dull noise that becomes more evident when accelerating)	Oil clearance increased due to worn crank journals or crank bearings	Replace crank bearings and crankshaft or regrind crankshaft and install the undersize bearing
	Crankshaft out of round	Replace crank bearings and crankshaft or regrind crankshaft and install the undersize bearing
	Crank bearing seized	Crank bearing seized Replace crank bearings and crankshaft or regrind crankshaft and install the undersize bearing

Troubleshooting Procedure

Short out each spark plug in sequence using insulated spark plug wire removers. Locate cylinder with defective bearing by listening for abnormal noise that stops when spark plug is shorted out.

Condition	Possible cause	Correction
Noise from connecting rods or from connecting rod bearings (Faulty connecting rods or connecting rod bearings usually make an abnormal noise slightly higher than the crank bearing noise, which becomes more evident when engine is accelerated)	Bearing or crankshaft pin worn	Replace connecting rod bearings and crankshaft or regrind crankshaft pin and install the undersize bearing
	Crankpin out of round	Replace connecting rod bearings and crankshaft or regrind crankshaft pin and install the undersize bearing
	Connecting rod bent	Correct or replace
	Connecting rod bearing seized	Replace connecting rod bearings and crankshaft or regrind crankshaft pin and install the undersize bearing

Troubleshooting Procedure

Abnormal noise stops when the spark plug on the cylinder with defective part is shorted out.

Condition	Possible cause	Correction
Piston and cylinder noise (Faulty piston or cylinder usually makes a combined mechanical thumping noise which increases when engine is suddenly accelerated but diminishes gradually as the engine warms up)	Piston clearance increased due to cylinder wear	Replace piston and cylinder body
	Piston seized	Replace piston and cylinder body
	Piston ring broken	Replace piston and cylinder body
	Piston defective	Replace pistons and others

Troubleshooting Procedure

Short out each spark plug and listen for change in engine noise.

Condition	Possible cause	Correction
Piston pin noise (Piston makes noise each time it goes up and down)	Piston pin or piston pin hole worn	Replace piston, piston pin and connecting rod assy

Troubleshooting Procedure

The slapping sound stops when spark plug on bad cylinder is shorted out.

Condition	Possible cause	Correction
Timing belt noise	Timing belt tension is incorrect	Replace pusher or adjust the tension pulley or replace timing belt
	Tensioner bearing defective	Replace
	Timing belt defective	Replace
	Timing pulley defective	Replace
	Timing belt comes in contact with timing cover	Replace timing belt and timing cover
Valve noise	Valve clearance incorrect	Replace adjusting shim
	Valve and valve guide seized	Replace valve and valve guide
	Valve spring broken or weakened	Replace
	Valve seat off–positioned	Correct
	Camshaft worn out	Replace
Crankshaft noise	Crankshaft end play excessive (noise occurs when clutch is engaged)	Replace thrust bearing
Engine knocking	Preignition due to use of spark plugs of inadequate heat range	Install Spark Plugs of adequate heat range
	Carbon deposits in combustion chambers	Clean
	Fuel too low in octane rating	Replace fuel
	Wide Open Throttle enrichment system failure	Refer to Section 6E
	Selection of transmission gear incorrect	Caution operator of incorrect gear selection
	Engine overheating	Refer to “Engine Lacks Power”
Others	Water pump defective	Replace
	Drive belt slipping	Replace auto tentioner or drive belt

Abnormal Combustion

Condition	Possible cause	Correction
Trouble in fuel system	Fuel pressure control valve defective	Replace
	Fuel filter clogged	Replace
	Fuel pump clogged	Clean or replace
	Fuel tank or fuel pipe clogged	Clean or replace
	Fuel injector clogged	Clean or replace
	Fuel pump relay defective	Replace
	Power supply cable for fuel pump broken or poor connections	Reconnect, correct or replace
	Mass Airflow (MAF) Sensor circuit open or defective	Correct or replace
	MAF Sensor defective	Replace
	Manifold Absolute Pressure Sensor circuit open or shorted	Correct or replace
	Manifold Absolute Pressure Sensor defective	Replace
	Engine Coolant Temperature (ECT) Sensor circuit open or shorted	Correct or replace
	ECT Sensor defective	Replace
	Throttle Position Sensor adjustment incorrect	Readjust
	Throttle Position Sensor defective	Replace
	Throttle Position Sensor connector poor connections	Reconnect
	Vehicle Speed Sensor cable poor connections or defective	Correct or replace
	Vehicle Speed Sensor loosely fixed	Fix tightly
	Vehicle Speed Sensor in wrong contact or defective	Replace
	Engine Control Module cable poor connections or defective	Correct or replace
Trouble in emission control system	Heated Oxygen Sensor circuit open	Correct or replace
	Heated Oxygen Sensor defective	Replace
	Signal vacuum hose loosely fitted or defective	Correct or replace
	ECT Sensor circuit open or shorted	Correct or replace
	Canister Purge Valve circuit open or shorted	Correct or replace
	Canister Purge Valve defective	Replace
	ECT Sensor defective	Replace
	Positive Crankcase Ventilation (PCV) valve and hose clogged	Correct or replace
	Evaporator system	Refer to Section 6E
Trouble in ignition system	———	Refer to “Engine Lacks Power”
Trouble in cylinder head parts	Carbon deposits in combustion chamber	Remove carbon
	Carbon deposit on valve, valve seat and valve guide	Remove carbon

Engine Oil Consumption Excessive

Condition	Possible cause	Correction
Oil leaking	Oil pan drain plug loose	Retighten or replace gasket
	Crankcase fixing bolts loosened	Retighten
	Oil pan setting bolts loosened	Retighten
	Oil pan gasket broken	Replace gasket
	Front cover retaining bolts loose or gasket broken	Retighten or replace gasket
	Head cover fixing bolts loose or gasket broken	Retighten or replace gasket
	Oil cooler adapter cracked	Replace
	Oil cooler center bolt loose	Retighten
	Oil cooler O–ring broken	Replace
	Oil cooler piping loose or broken	Retighten or replace
	Oil filter adapter cracked	Replace
	Oil filter attachings bolt loose or rubber gasket broken	Retighten or replace oil filter
	Oil cooler broken	Replace
	Crankshaft front or rear oil seal defective	Replace oil seal
	Oil pressure unit loose or broken	Retighten or replace
	Blow–by gas hose broken	Replace hose
	Positive Crankcase Ventilation Valve clogged	Clean
	Engine/Transmission coupling failed	Replace oil seal
Oil leaking into combustion chambers due to poor seal in valve system	Valve stem oil seal defective	Replace
	Valve stem or valve guide worn	Replace valve and valve guide
Oil leaking into combustion chambers due to poor seal in cylinder parts	Cylinders and pistons worn excessively	Replace cylinder body assembly and pistons
	Piston ring gaps incorrectly positioned	Correct
	Piston rings set with wrong side up	Correct
	Piston ring sticking	Replace cylinder body assembly and pistons
	Piston ring and ring groove worn	Replace pistons and others
	Return ports in oil rings clogged	Clean piston and replace rings
Positive Crankcase Ventilation System malfunctioning	Positive Crankcase Ventilation Valve clogged	Clean
Others	Improper oil viscosity	Use oil of recommended S.A.E. viscosity
	Continuous high speed driving and/or severe usage such as trailer towing	Continuous high speed operation and/or severe usage will normally cause increased oil consumption

Fuel Consumption Excessive

Condition	Possible cause	Correction
Trouble in fuel system	Mixture too rich or too lean due to trouble in fuel injection system	Refer to “Abnormal Combustion”
	Fuel cut function does not work	Refer to “Abnormal Combustion”
Trouble in ignition system	Misfiring or abnormal combustion due to trouble in ignition system	Refer to “Hard Start” or “Abnormal Combustion”
Others	Engine idle speed too high	Reset Idle Air Control Valve
	Returning of accelerator control sluggish	Correct
	Fuel system leakage	Correct or replace
	Clutch slipping	Correct
	Brake drag	Correct
	Selection of transmission gear incorrect	Caution operator of incorrect gear selection

Lubrication Problems

Condition	Possible cause	Correction
Oil pressure too low	Wrong oil in use	Replace with correct engine oil
	Relief valve sticking	Replace
	Oil pump not operating properly	Correct or replace
	Oil pump strainer clogged	Clean or replace strainer
	Oil pump worn	Replace
	Oil pressure gauge defective	Correct or replace
	Crankshaft bearing or connecting rod bearing worn	Replace
Oil contamination	Wrong oil in use	Replace with correct engine oil
	Oil filter clogged	Replace oil filter
	Cylinder head gasket damage	Replace gasket
	Burned gases leaking	Replace piston and piston rings or cylinder body assembly
Oil not reaching valve system	Oil passage in cylinder head or cylinder body clogged	Clean or correct

Engine Oil Pressure Check

1. Check for dirt, gasoline or water in the engine oil.
   a. Check the viscosity of the oil.
   b. Check the viscosity of the oil.
   c. Change the oil if the viscosity is outside the specified standard.
   d. Refer to the “Maintenance and Lubrication” section of this manual.
2. Check the engine oil level.
   The level should fall somewhere between the “ADD” and the “FULL” marks on the oil level dipstick.
   If the oil level does not reach the “ADD” mark on the oil level dipstick, engine oil must be added.
3. Remove the oil pressure unit.
4. Install an oil pressure gauge.
5. Start the engine and allow the engine to reach normal operating temperature (About 80˚C).
6. Measure the oil pressure.
   Oil pressure should be:
   392–550 kPa (56.9–80.4 psi) at 3000 rpm.
7. Stop the engine.
8. Remove the oil pressure gauge.
9. Install the oil pressure unit.
10. Start the engine and check for leaks.

Malfunction Indicator Lamp

The instrument panel “CHECK ENGINE” Malfunction Indicator Lamp (MIL) illuminates by self diagnostic system when the system checks the starting of engine, or senses malfunctions.

Condition	Possible cause	Correction
“CHECK ENGINE” MIL does not illuminate at the starting of engine	Bulb defective	Replace
	MIL circuit open	Correct or replace
	Command signal circuit to operate self diagnostic system shorted	Correct or replace
	Engine Control Module (ECM) cable loosely connected, disconnected or defective	Correct or replace
	ECM defective	Replace
“CHECK ENGINE” MIL illuminates, and stays on	Deterioration of heated oxygen sensor internal element	Replace
	Heated oxygen sensor connector terminal improper contact	Reconnect properly
	Heated oxygen sensor lead wire shorted	Correct
	Heated oxygen sensor circuit open	Correct or replace
	Deterioration of engine coolant temperature sensor internal element	Replace
	Engine coolant temperature sensor connector terminal improper contact	Reconnect properly
	Engine coolant temperature sensor lead wire shorted	Correct
	Engine coolant temperature sensor circuit open	Correct or replace
	Throttle position sensor open or shorted circuits	Correct or replace
	Deterioration of crankshaft position sensor	Replace
	Crankshaft position sensor circuit open or shorted	Correct or replace
	Vehicle speed sensor circuit open	Correct or replace
	Manifold absolute pressure sensor circuit open or shorted	Correct or replace
	Intake air temperature sensor circuit open or shorted	Correct or replace
	Fuel injector circuit open or shorted	Correct or replace
	ECM driver transistor defective	Replace ECM
	Malfunctioning of ECM RAM (Random Access Memory) or ROM (Read Only Memory)	Replace ECM

Cylinder Head Cover LH

Removal

1. Disconnect battery ground cable.
2. Remove air cleaner duct assembly.

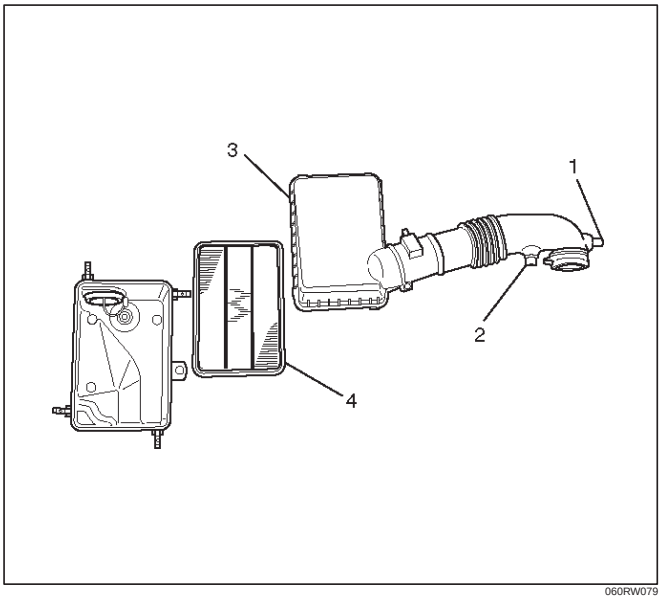

060RW079

Legend

(1) Positive Crankcase Ventilation Hose Connector
(2) Intake Air Temperature Sensor
(3) Air Cleaner Duct Assembly
(4) Air Cleaner Element

3. Disconnect positive crankcase ventilation hose.
4. Remove camshaft angle sensor connector.
5. Remove ground cable fixing bolt on cylinder head cover.
6. Ignition coil connector and ignition coil.
   - Disconnect the three connectors from the ignition coils.
   - Remove harness bracket bolt on cylinder head cover.
   - Remove fixing bolts on ignition coils.

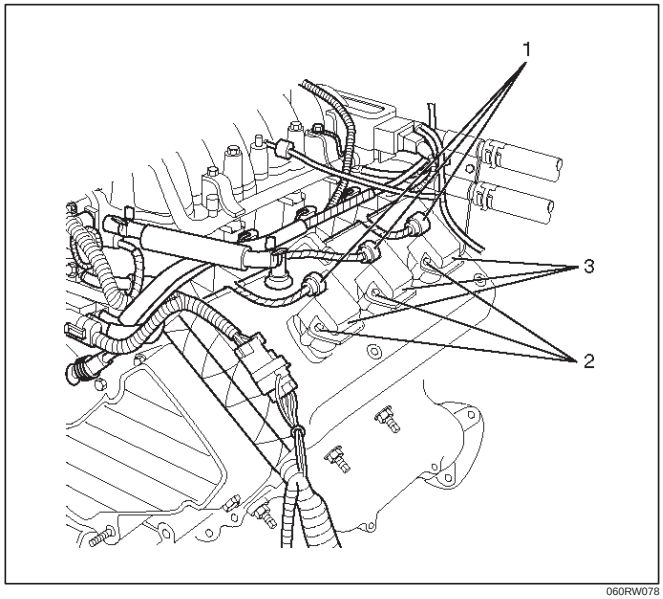

060RW078

Legend

(1) Ignition Coil Connector
(2) Bolt
(3) Ignition Coil Assemblies

7. Remove fixing bolt for fuel injector harness bracket.
8. Remove eight fixing bolts, then the cylinder head cover.

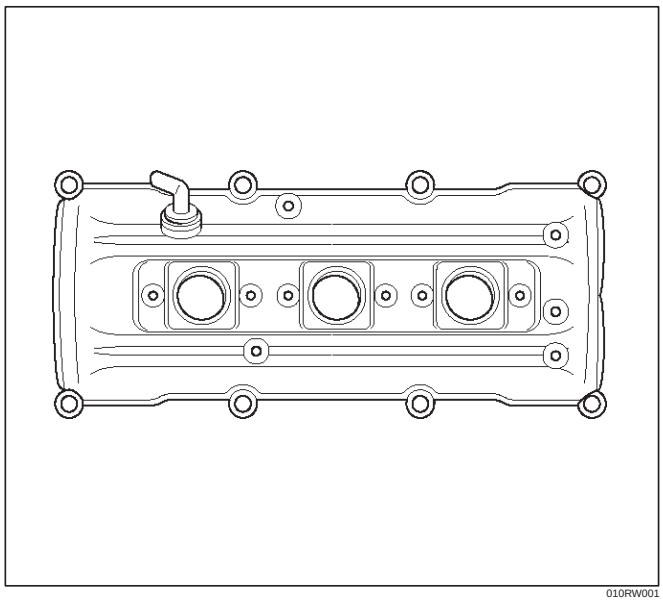

010RW001

Installation

1. Install cylinder head cover.
   - Clean the sealing surface of cylinder head and cylinder head cover to remove oil and sealing materials completely.
   - Apply sealant (TB-1207B or equivalent) of bead diameter 2-3 mm at eight place of arched area of camshaft bracket on front and rear sides.
   - The cylinder head cover must be installed with in 5 minutes after sealant application to prevent hardning of sealant.
   - Tighten bolts to the specified torque.

   Torque : 9 N·m (0.9 kg·m/80 lb in)

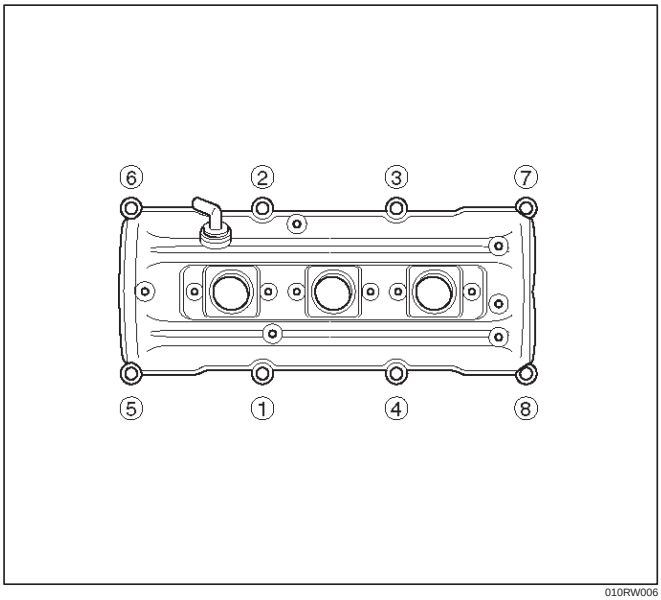

010RW006

2. Install fuel injection harness bracket and tighten bolt to the specified torque.

   Torque : 9 N·m (0.9 kg·m/80 lb in)

3. Connect ignition coil connector and ignition coil, then tighten bolt to the specified torque.

   Torque : 4 N·m (0.4 kg·m/35 lb in)

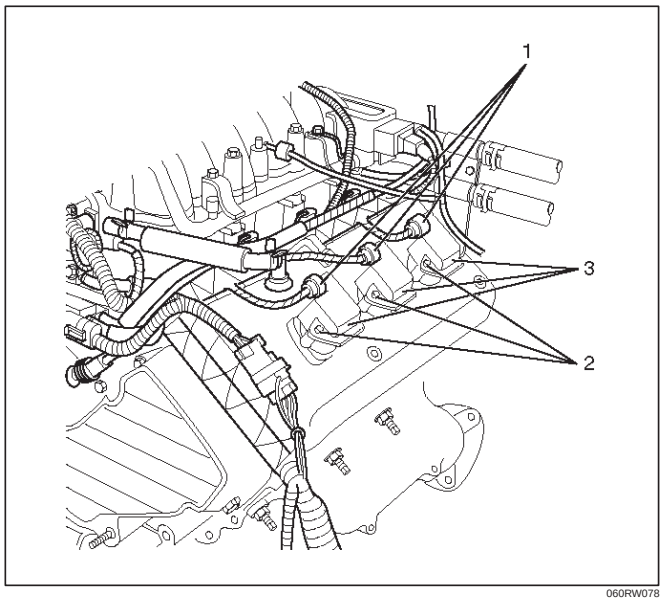

060RW078

Legend

(1) Ignition Coil Connector
(2) Bolt
(3) Ignition Coil Assembly

4. Connect ground cable and tighten bolts to the specified torque.

   Torque : 9 N·m (0.9 kg·m/80 lb in)

5. Connect camshaft angle sensor connector.
6. Install positive crankcase ventilation hose.
7. Install air cleaner duct assembly.

Cylinder Head Cover RH

Removal

1. Disconnect battery ground cable.
2. Disconnect ventilation hose from cylinder head cover.
3. Disconnect three ignition coil connectors from ignition coils and remove harness bracket bolts on cylinder head cover then remove ignition coil fixing bolts on ignition coils and remove ignition coils.
4. Remove heater pipe fixing bolts from the bracket.
5. Disconnect fuel injector harness connector then remove fuel injector harness bracket bolt.
6. Remove eight fixing bolts then the cylinder head cover.

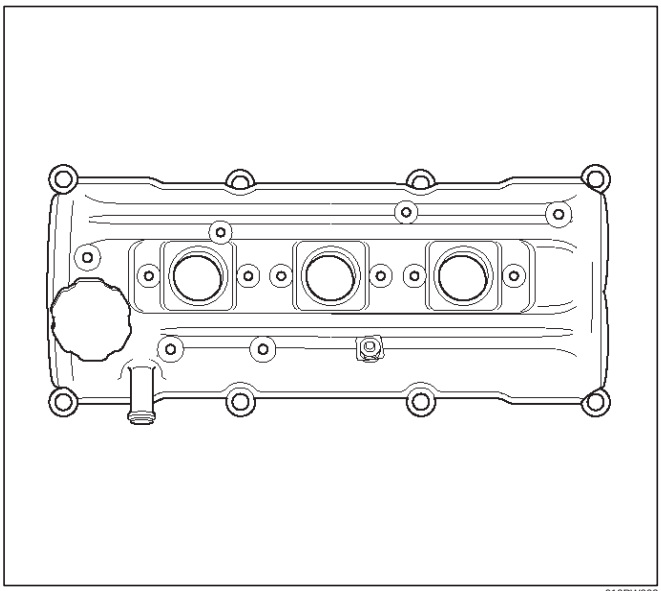

010RW002

Installation

1. Install cylinder head cover.
   - Clean the sealing surface of cylinder head and cylinder head cover to remove oil and sealing materials completely.
     Apply sealant (TB-1207B or equivalent) of bead diameter 2-3 mm at eight place of arched area of camshaft bracket on front and rear sides.
   - The cylinder head cover must be installed within 5 minutes after sealant application to prevent premature hardening of sealant.
   - Tighten bolts to the specified torque.

   Torque : 9 N·m (0.9 kg·m/80 lb in)

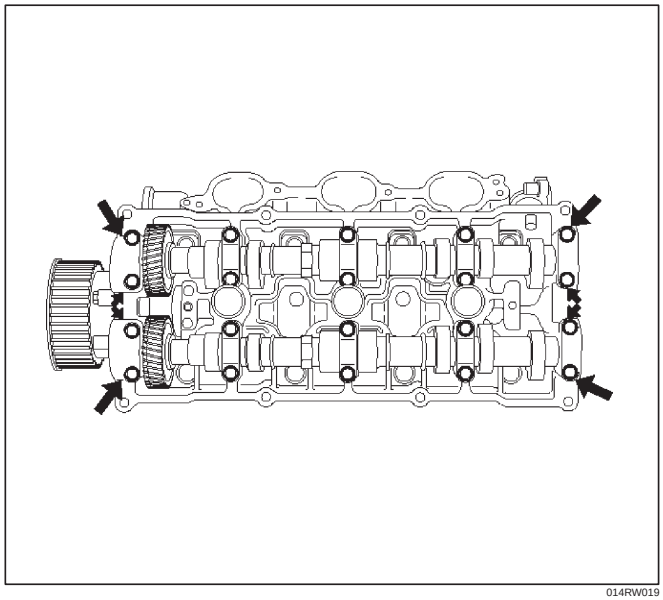

014RW019

2. Install exhaust gas recirculation pipe and tighten to specified torque.

   Torque:

   Exhaust manifold side: 28 N·m (2.9 kg·m/21 lb ft)

   Flare nut: 44 N·m (4.5 kg·m/33 lb ft)

   Cylinder head side: 25 N·m (2.6 kg·m/18 lb ft)
3. Tighten fuel injector harness bracket bolts to specified torque then reconnect fuel injector harness connector.

   Torque : 7.8 N·m (0.8 kg·m/5.7 lb ft)
4. Install heater pipe bolt to the specified torque.

   Torque : 21 N·m (2.1 kg·m/15 lb ft)
5. Connect ignition coil connector and tighten ignition coil fixing bolts to specified torque.

   Torque : 4 N·m (0.4 kg·m/35 lb in)
6. Connect ventilation hose to cylinder head.

Common Chamber

Removal

1. Disconnect battery ground cable.
2. Remove air cleaner duct assembly.

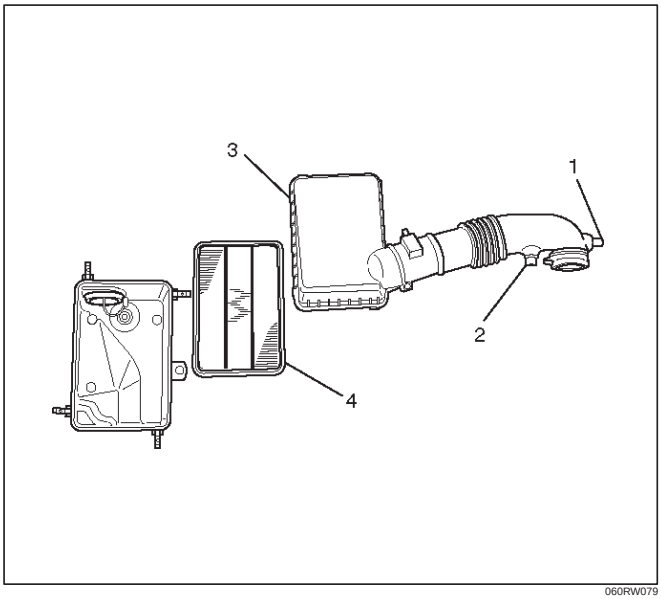

060RW079

Legend

(1) Positive Crankcase Ventilation Hose Connector
(2) Intake Air Temperature Sensor
(3) Air Cleaner Duct Assembly
(4) Air Cleaner Element

3. Remove the ECM.
   - Disconnect the two connectors from the ECM.
   - Remove fixing bolts on the common chamber.
   - Remove fixing bolts for ground cable.

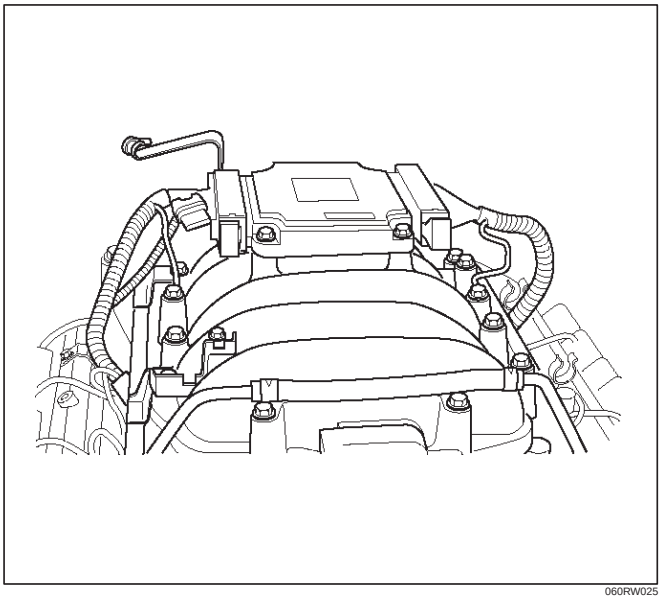

060RW025

4. Disconnect accelerator pedal cable from throttle body and cable bracket.
5. Disconnect vacuum booster hose from common chamber.
6. Disconnect connector from manifold absolute pressure sensor, idle air control valve, throttle position sensor, solenoid valve, electric vacuum sensing valve.
7. Disconnect vacuum hose on canister VSV and positive crankcase ventilation hose, fuel rail assembly with pressure control valve bracket.
8. Remove ventilation hose from throttle valve and intake duct and remove water hose.
9. Remove the four throttle body fixing bolts.
10. Remove exhaust gas recirculation valve assembly fixing bolt and nut on common chamber.
11. Remove two bolts from common chamber rear side for remove fuel hose bracket.
12. Remove common chamber four bolts and four nuts then remove the common chamber.

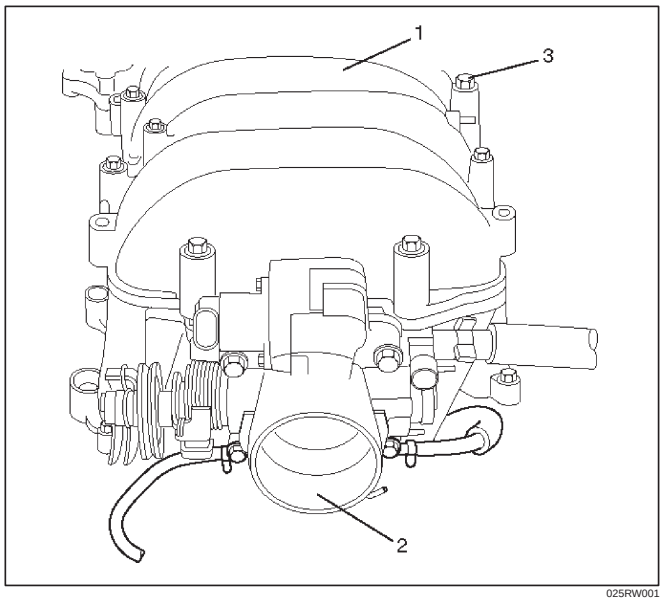

025RW001

Legend

(1) Common Chamber
(2) Throttle Valve Assembly
(3) Bolt

Installation

1. Install common chamber and tighten bolts and nuts to the specified torque.

   Torque :

   Bolt : 25 N·m (2.6 kg·m/18 lb ft)

   Nut : 25 N·m (2.6 kg·m/18 lb ft)
2. Install fuel hose bracket and tighten bolts to specified torque.

   Torque : 10 N·m (1.0 kg·m/89 lb in)
3. Install throttle body and tighten bolts to the specified torque.

   Torque : 25 N·m (2.6 kg·m/18 lb ft)
4. Install ventilating hose to throttle valve and intake duct.

5. Connect vacuum hoses on canister VSV and positive crankcase ventilation hose. Tighten bolts for fuel rail assembly with pressure control valve bracket.

Torque : 25 N·m (2.5 kg·m/18 lb ft)

6. Connect each connector without fail.
7. Connect vacuum booster hose.
8. Install the ECM.
   - Tighten the four bolts.

Torque : 10 N·m (1.0 kg·m/7 lb ft)

   - Connect the two connectors.
   - Tighten the two ground cable bolts.
9. Connect accelerator pedal cable.
   Don't need accelerator pedal cable adjustment.
   - Tighten nut and lock nut.

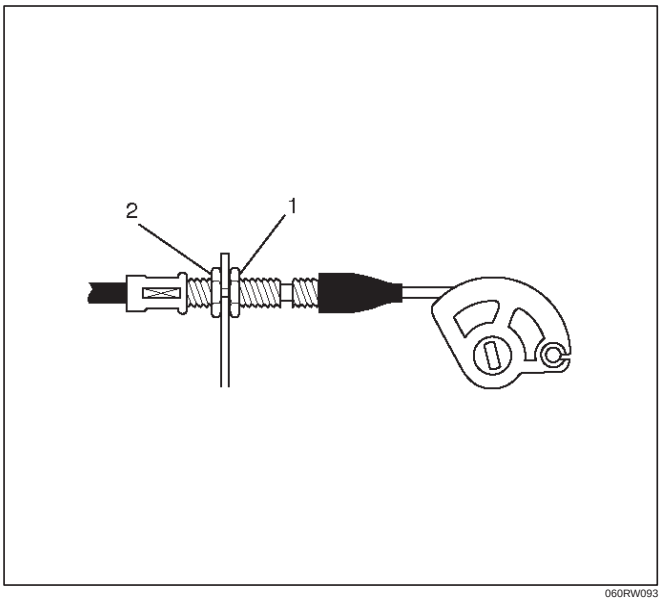

060RW093

Legend

(1) Lock Nut
(2) Nut

10. Install air cleaner duct assembly.

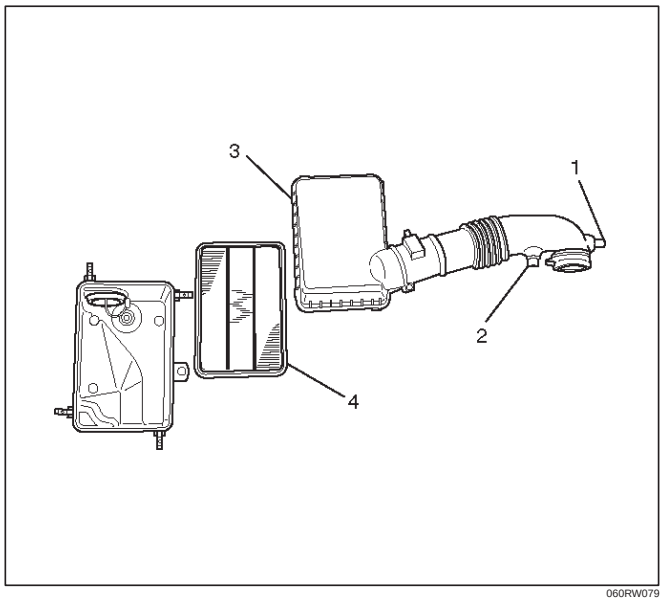

060RW079

Legend

(1) Positive Crankcase Ventilation Hose Connector
(2) Intake Air Temperature Sensor
(3) Air Cleaner Duct Assembly
(4) Air Cleaner Element.

Exhaust Manifold LH

Removal

1. Disconnect battery ground cable.
2. Remove air cleaner duct assembly.

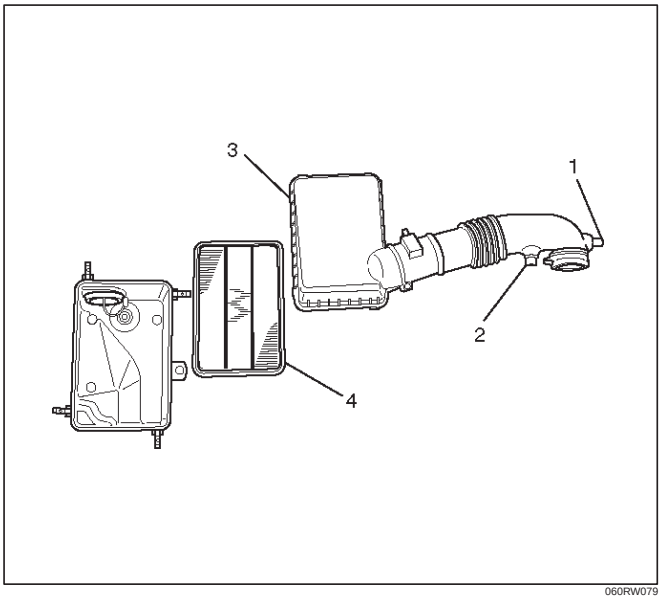

060RW079

Legend

(1) Positive Crankcase Ventilation Hose Connector
(2) Intake Air Temperature Sensor
(3) Air Cleaner Duct Assembly
(4) Air Cleaner Element

3. Disconnect O_2 sensor connector.
4. Remove exhaust front pipe three stud nuts from exhaust side and two nuts from rear end of exhaust front pipe.

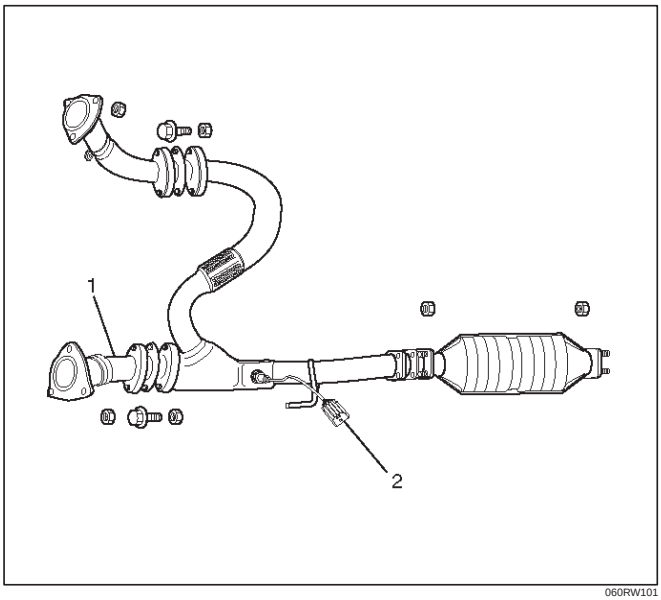

060RW101

Legend

(1) Exhaust Front Pipe LH
(2) O_2 Sensor

5. Remove heat protector two fixing bolts then the heat protector.
6. Remove a bolt on engine LH side for air conditioner (A/C) compressor bracket and loosen two bolts for A/C compressor then move A/C compressor to front side.
7. Remove exhaust manifold eight fixing nuts and remove exhaust manifold from the engine.

Installation

1. Install exhaust manifold and tighten exhaust manifold fixing nuts to the specified torque with new nuts.

   Torque: 57 N·m (5.8 kg·m/42 lb ft)

2. Install heat protector.
3. Install exhaust front pipe and tighten three stud nuts and two nuts to the specified torque.

   Torque :

   Stud nuts: 67 N·m (6.8 kg·m/49 lb ft)

   Nuts: 43 N·m (4.4 kg·m/32 lb ft)

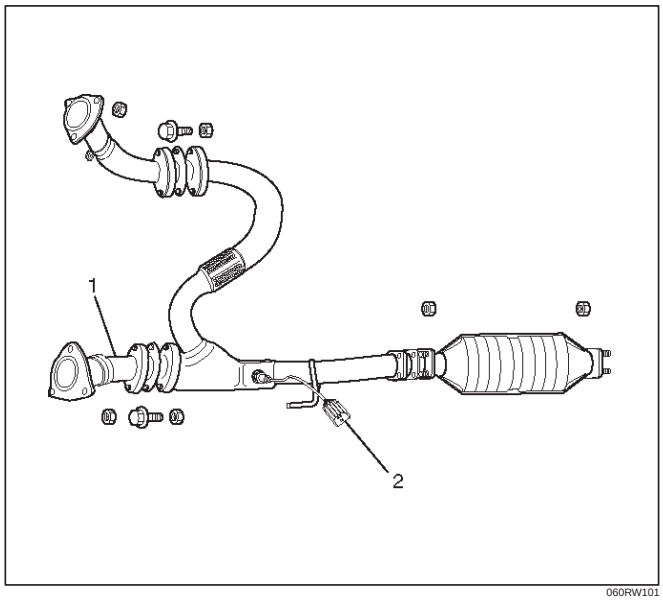

060RW101

Legend

(1) O_2 Sensor
(2) Exhaust Front Pipe LH

4. Set A/C compressor to normal position and tighten two bolts and a bolt to the specified torque.

   Torque : 40 N·m (4.1 kg·m/30 lb ft)

5. Reconnect O_2 sensor connector.
6. Install air cleaner duct assembly.

Exhaust Manifold RH

Removal

1. Disconnect battery ground cable.
2. Remove torsion bar. Refer to removal procedure in Front Suspension section.
3. Remove exhaust front pipe three stud nuts and two nuts then disconnect exhaust front pipe.

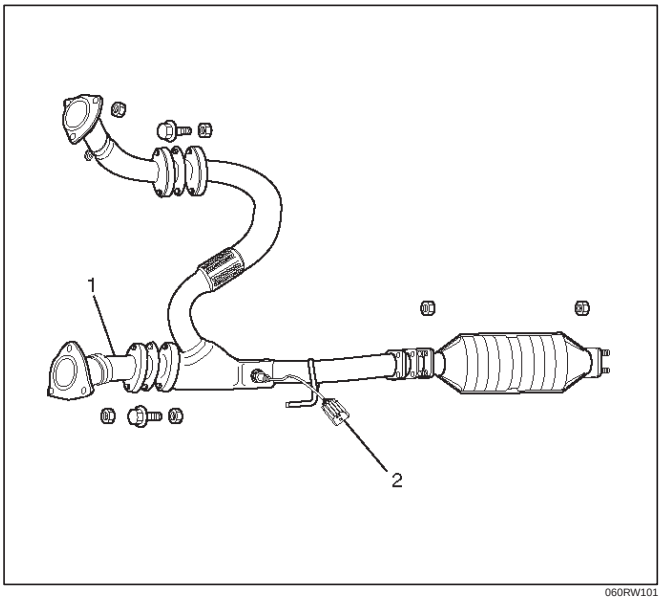

060RW101

Legend

(1) Exhaust Front Pipe RH
(2) O_2 Sensor

4. Remove heat protector two fixing bolts then the heat protector.
5. Remove exhaust manifold eight fixing nuts then the exhaust manifold.

Installation

1. Install exhaust manifold and tighten bolts to the specified torque.

   Torque : 57 N·m (5.8 kg·m/42 lb ft)

2. Install heat protector
3. Install exhaust front pipe and tighten three stud nuts and two nuts to the specified torque.

   Torque:

   Stud nuts: 67 N·m (6.8 kg·m/49 lb ft)

   Nuts: 43 N·m (4.4 kg·m/32 lb ft)

4. Install the torsion bar and readjust the vehicle height. Refer to installation and vehicle height adjustment procedure for front suspension.

Crankshaft Pulley

Removal

1. Disconnect battery ground cable.
2. Remove air cleaner assembly.

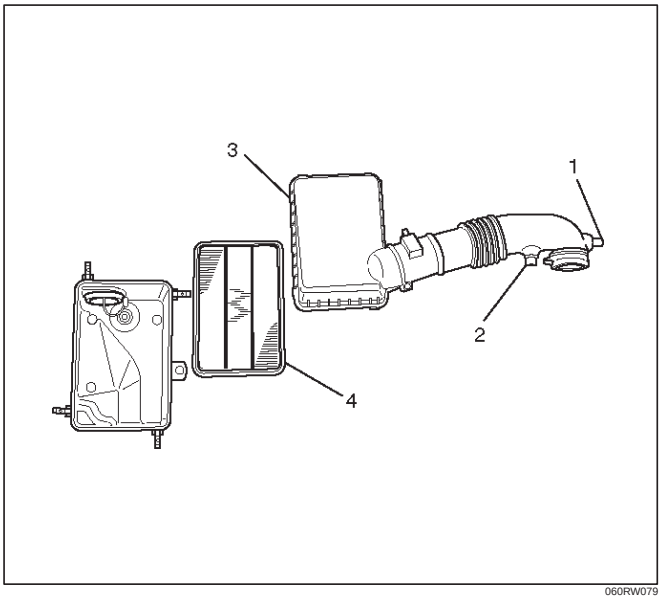

060RW079

Legend

(1) Positive Crankcase Ventilation Hose Connector
(2) Intake Air Temperature Sensor
(3) Air Cleaner Duct Assembly
(4) Air Cleaner Element

3. Remove radiator upper fan shroud from radiator.
4. Move serpentine belt tensioner to loose side using wrench then remove serpentine belt.

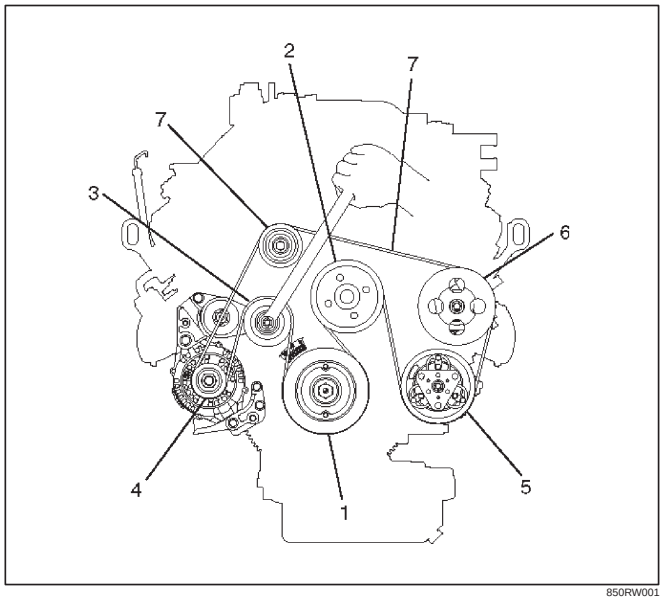

850RW001

Legend

(1) Crankshaft Pulley
(2) Cooling Fan Pulley
(3) Tensioner
(4) Generator
(5) Air Conditioner Compressor
(6) Power Steering Oil Pump
(7) Serpentine Belt

5. Remove cooling fan assembly four fixing nuts, then the cooling fan assembly.
6. Remove crankshaft pulley assembly using 5–8840–0133–0 crankshaft holder, hold crankshaft pulley then remove center bolt and pulley.

Installation

1. Install crankshaft pulley using 5–8840–0133–0 crankshaft holder, hold the crankshaft pulley and tighten center bolt to the specified torque.

   Torque : 167 N·m (17.0 kg·m/123 lb ft)

2. Install cooling fan assembly and tighten bolts/nuts to the specified torque.

   Torque : 22 N·m (2.2 kg·m/16 lb ft) for fan pulley and fan bracket.

   Torque : 10 N·m (1.0 kg·m/88.5 lb in) for fan and clutch assembly.

3. Move serpentine belt tensioner to loose side using wrench, then install serpentine belt to normal position.
4. Install radiator upper fan shroud.
5. Install air cleaner assembly.

Timing Belt

Removal

1. Disconnect battery ground cable.
2. Remove air cleaner assembly.
3. Remove radiator upper fan shroud from radiator.
4. Move drive belt tensioner to loose side using wrench then remove drive belt.

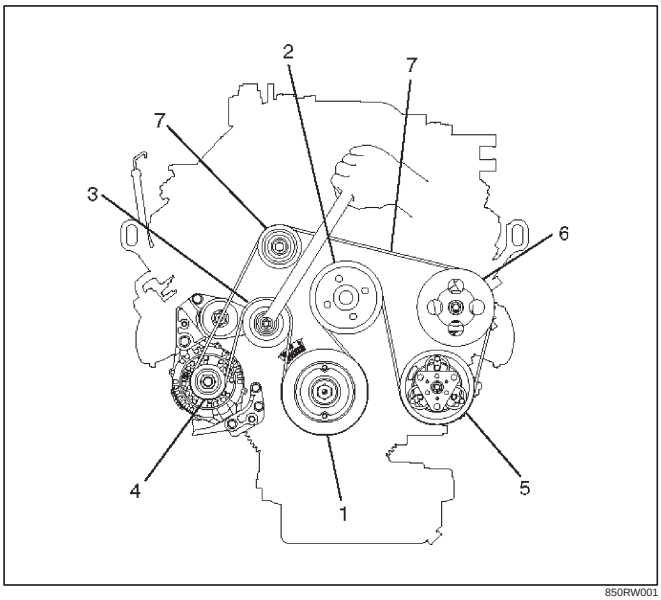

850RW001

Legend

(1) Crankshaft Pulley
(2) Cooling Fan Pulley
(3) Tensioner
(4) Generator
(5) Air Conditioner Compressor
(6) Power Steering Oil Pump
(7) Drive Belt

5. Remove cooling fan assembly four nuts, then the cooling fan assembly.
6. Remove cooling fan drive pulley assembly.
7. Remove idle pulley assembly.
8. Remove serpentine belt tensioner assembly.
9. Remove power steering pump assembly.
10. Remove crankshaft pulley assembly using J-8614-01 crankshaft holder, hold crankshaft pulley remove center bolt, then the pulley.
11. Remove right side timing belt cover then left side timing belt cover.
12. Remove lower timing belt cover
13. Remove pusher.

CAUTION: The pusher prevents air from entering the oil chamber. Its rod must always be facing upward.

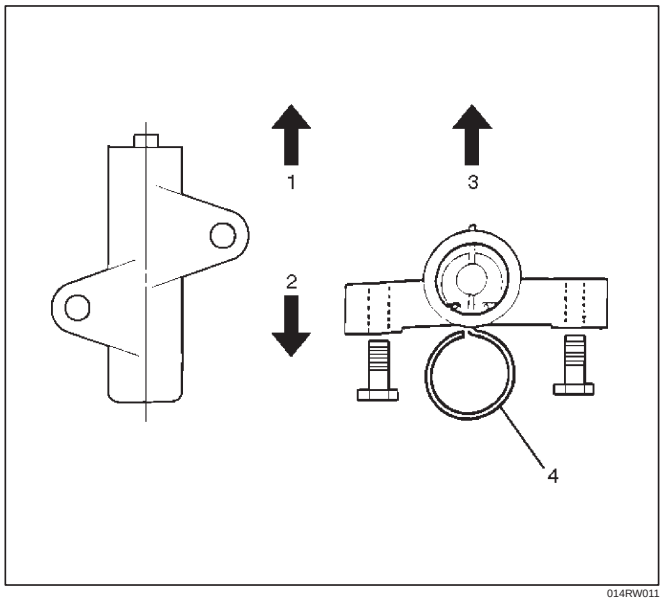

014RW011

Legend

(1) Up Side
(2) Down Side
(3) Direction For Installation
(4) Locking Pin

14. Remove timing belt.

CAUTION:

1. **Do not bend or twist the belt, otherwise its core could be damaged. The belt should not be bent at a radius less than 30 mm.**
2. **Do not allow oil or other chemical substances to come in contact with the belt. They will shorten the life.**
3. **Do not attempt to pry or stretch the belt with a screw driver or any other tool during installation.**
4. **Store timing belt in a cool and dark place. Never expose the belt direct sunlight or heat.**

Installation

NOTE: For correct belt installation, the letter on the belt must be able to be read as viewed from the front of the vehicle.

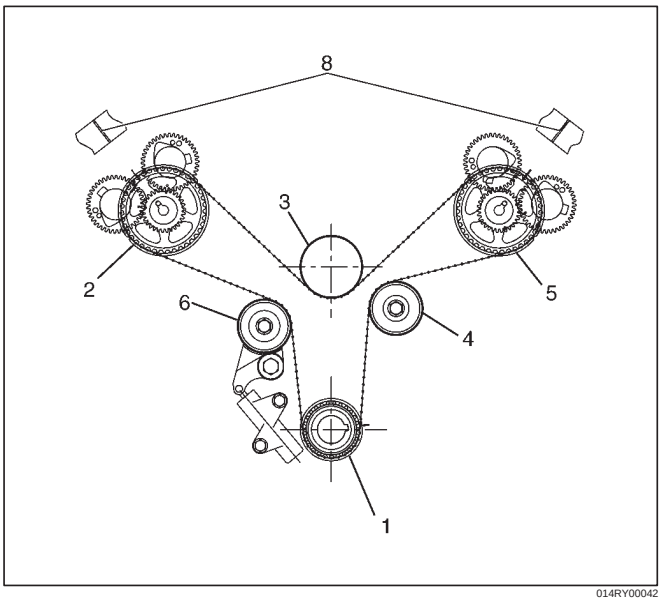

014RY00042

Legend

(1) Crankshaft Timing Pulley
(2) RH Bank Camshaft Drive Gear Pulley
(3) Water Pump Pulley
(4) Idle Pulley
(5) LH Bank Camshaft Drive Gear Pulley
(6) Tension Pulley

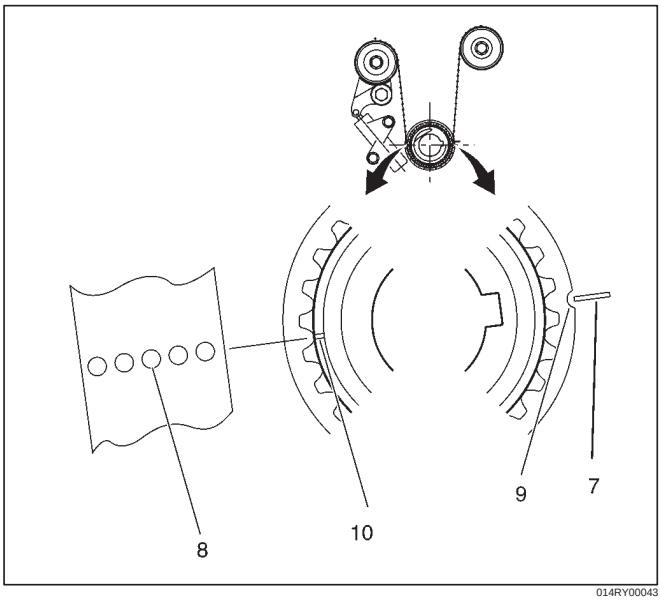

014RY00043

Legend

(7) Alignment Mark on Oil Pump.
(8) Alignment Mark on Timing Belt
(9) Alignment Mark (notch) on Crankshaft Timing Pulley.
(10) Alignment Mark (groove) on Crankshaft Timing Pulley.

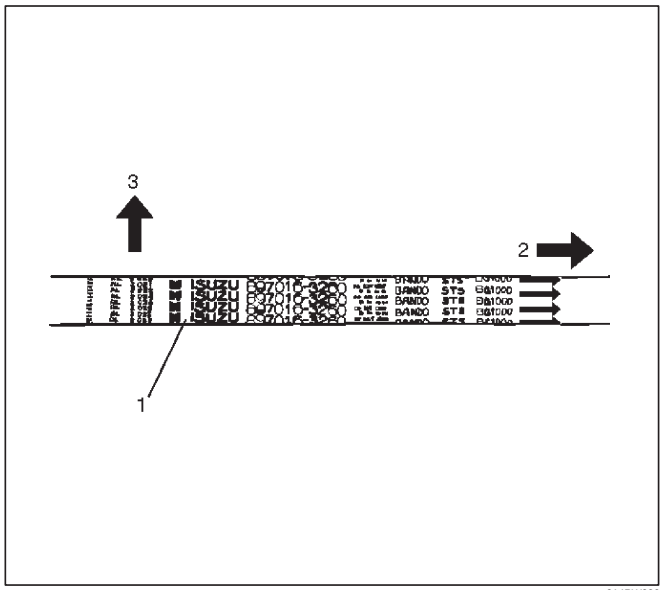

014RW006

Legend

(1) Timing Belt
(2) Engine Rotation Direction
(3) Cylinder Head Side

1. Install timing belt.
   1. Align the mark (notch) of crankshaft timing pulley (2) with mark on oil pump (1).
      Align the mark (groove) on the crankshaft timing pulley (3) with alignment mark (white dots line) on the timing belt (4).

NOTE: When timing marks are aligned, No.2 piston will be on Top Dead Center.

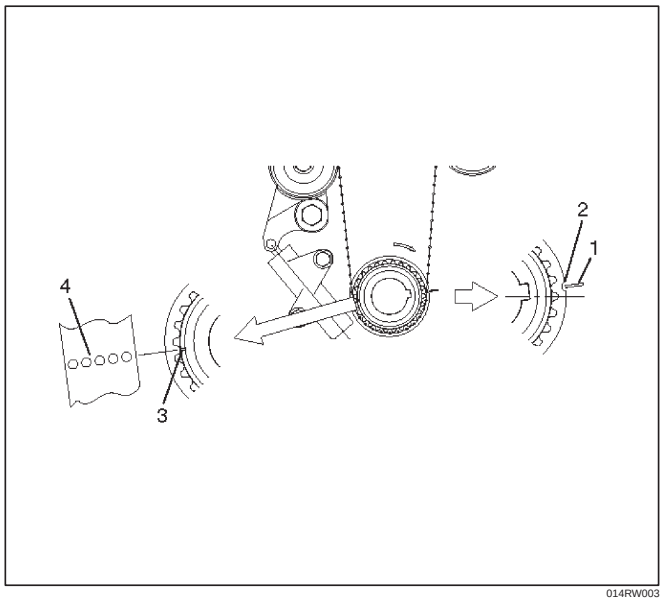

014RW003

Legend

(1) Alignment Mark on Oil Pump
(2) Groove on Crankshaft Timing Pulley
(3) Alignment Mark on Crankshaft Timing Pulley
(4) Alignment Mark on Timing Belt

2. Align the alignment mark on the RH bank camshaft drive gear pulley (2) to the alignment mark of the cylinder head cover RH (3).
3. Align the alignment mark (white line) on the timing belt (1) with alignment mark on the RH bank camshaft drive gear pulley (2) (on the left side as viewed from the front of the vehicle) and put the timing belt on the camshaft drive gear pulley.

   Secure the belt with a double clip or equivalent clip.

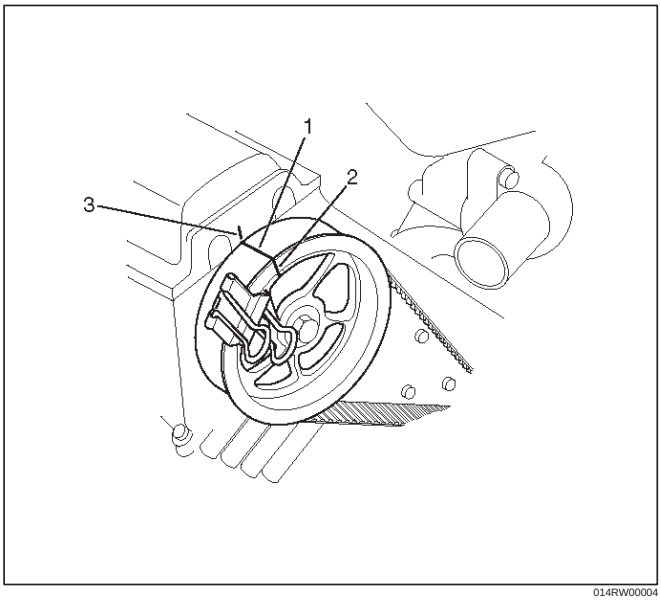

014RW00004

Legend

(1) Alignment Mark on Timing Belt (White line).
(2) Alignment Mark on Camshaft Drive Gear Pulley.
(3) Alignemnt Mark on Cylinder Head Cover RH.

4. Align the alignment mark on the LH bank camshaft drive gear pulley (2) to the alignment mark of the cylinder head cover LH (3).
5. Align the alignment mark (white line) on the timing belt (1) with the alignment mark on the LH bank camshaft drive gear pulley (2).

   When aligning the timing marks, use a wrench to turn the camshaft drive gear pulley, then set the timing mark between timing belt and camshaft drive gear pulley and put the timing belt on the camshaft drive gear pulley.
   Secure the belt with a double clip or equivalent clip.

NOTE: It is recommended for easy installation that the belt be secured with a double clip or equivalent clip after it is installed the timing belt to each pulley.

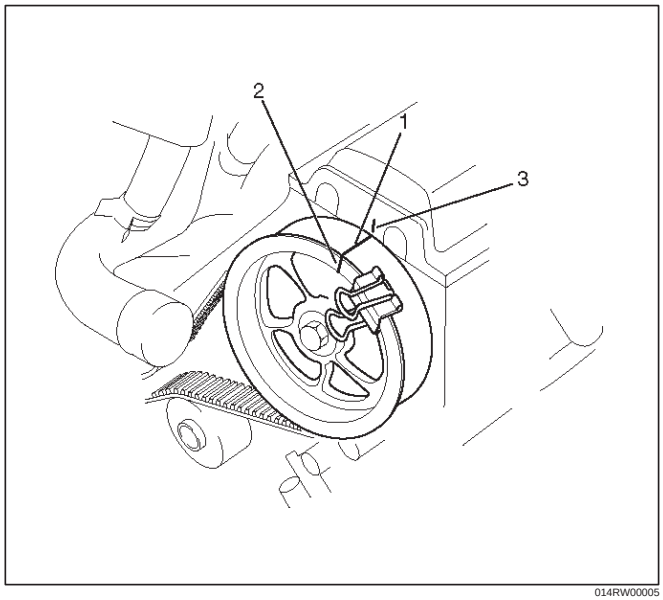

014RW00005

Legend

(1) Alignment Mark on Timing Belt (White line).
(2) Alignment Mark on Camshaft Drive Gear Pulley.
(3) Alignemnt Mark on Cylinder Head Cover LH.

6. Install crankshaft pulley temporarily and tighten center bolt by hand (do not use a wrench).

   Turn the crankshaft pulley clockwise to give some belt slack between the crankshaft timing pulley and the RH bank camshaft drive gear pulley.

2. Install pusher and tighten bolt to the specified torque.

Torque : 25 N·m (2.5 Kg·m/18 lb ft)

1. Install the pusher while pushing the tension pulley to the belt.
2. Pull out pin from the pusher.

NOTE: When reusing the pusher, press the pusher with approximately 100Kg to retract the rod, and insert a pin (1.4 mm piano wire).

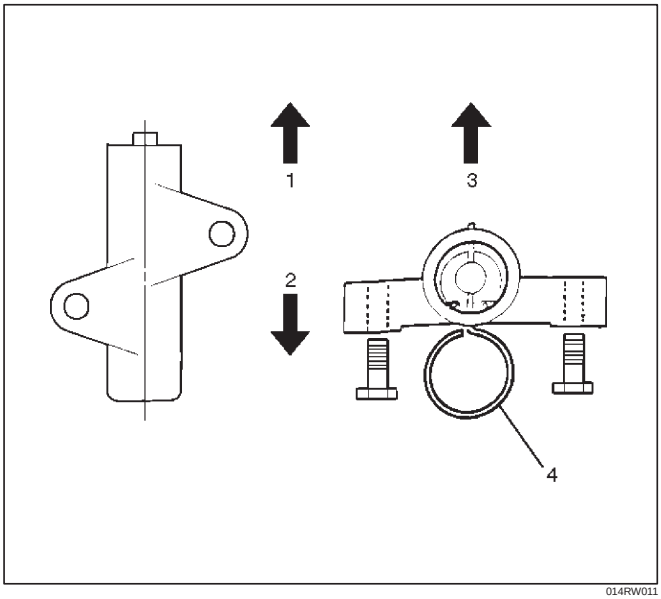

014RW011

Legend

(1) Up Side
(2) Down Side
(3) Direction for Installation
(4) Locking Pin

3. Remove double clips or equivalent clips, from timing belt pulleys.

   Turn the crankshaft pulley clockwise by two turns.

3. Install timing belt cover.

   Remove crankshaft pulley that was installed in step 1 item 5.

   Tighten bolts to the specified torque.

Torque: 19 N·m (1.9 kg·m/14 lb ft)

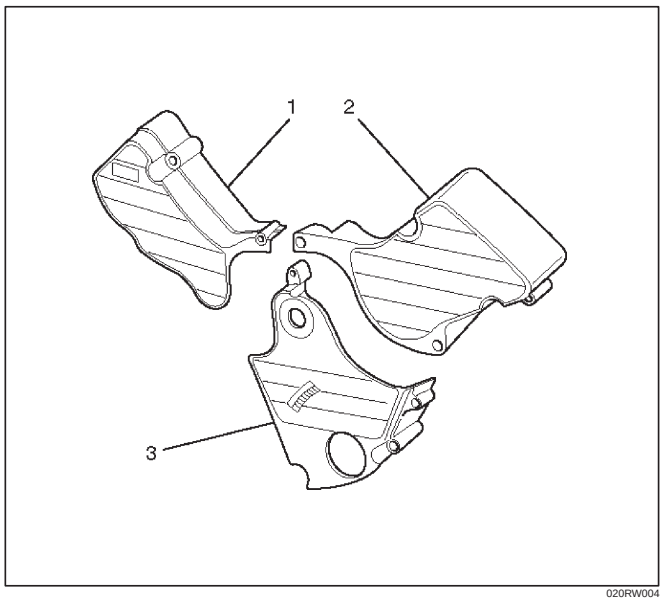

020RW004

Legend

(1) Timing Belt Cover RH
(2) Timing Belt Cover LH
(3) Timing Belt Cover Lower

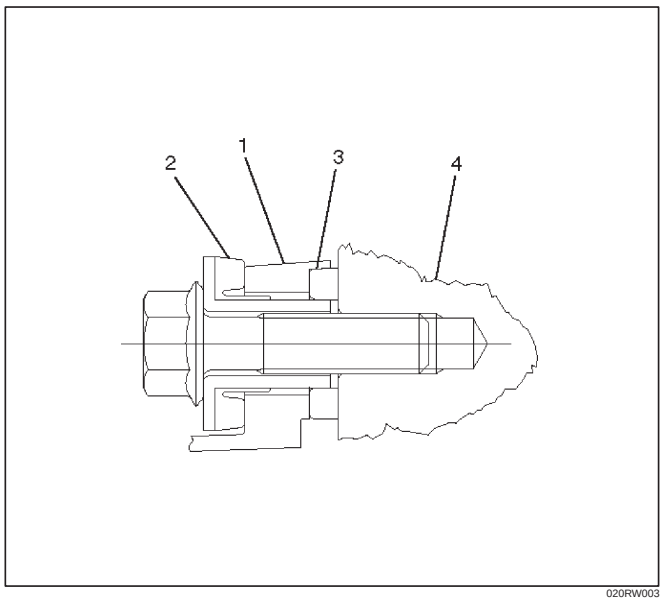

020RW003

Legend

(1) Timing Belt Cover
(2) Rubber Bushing
(3) Sealing Rubber
(4) Cylinder Body

4. Install crankshaft pulley using 5–8840–0133–0, hold the crankshaft pulley and tighten center bolt to the specified torque.

   Torque : 167 N·m (17.0 kg·m/123 lb ft)

5. Install fan pulley bracket and tighten fixing bolts to the specified torque.

   Torque : 22 N·m (2.2 kg·m/16 lb ft)

6. Install power steering pump assembly and tighten to the specified torque.

   Torque :

   M8 bolt : 22 N·m (2.2 kg·m/16 lb ft)

   M10 bolt : 46 N·m (4.7 kg·m/34 lb ft)

7. Install cooling fan assembly and tighten bolts/nuts to the specified torque.

   Torque : 22 N·m (2.2 kg·m/16 lb ft) for fan pulley and fan bracket.

   Torque : 10 N·m (1.0 kg·m/88.5 lb in) for fan and clutch assembly.

8. Move drive belt tensioner to loose side using wrench, then install drive belt to normal position.

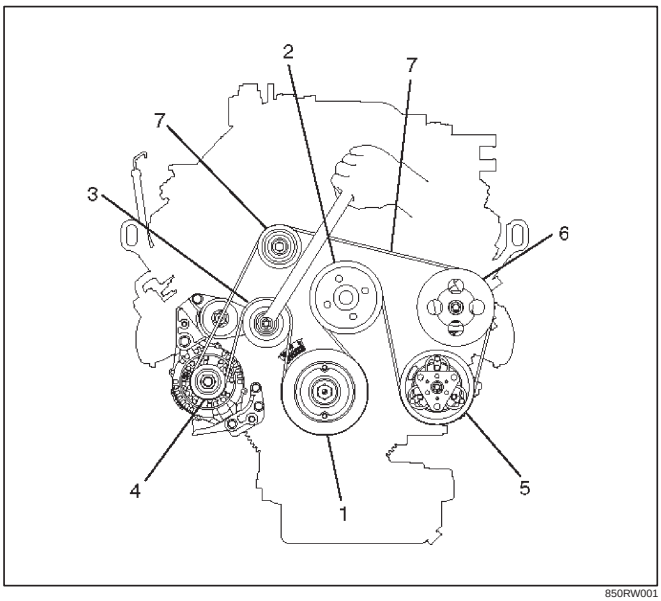

850RW001

Legend

(1) Crankshaft Pulley
(2) Cooling Fan Pulley
(3) Tensioner
(4) Generator
(5) Air Conditioner Compressor
(6) Power Steering Oil Pump
(7) Drive Belt

9. Install radiator upper fan shroud.
10. Install air cleaner assembly.

Camshaft

Removal

1. Disconnect battery ground cable.
2. Remove crankshaft pulley.
   - Refer to removal procedure for Crankshaft Pulley in this manual.
3. Remove timing belt.
   - Refer to removal procedure for Timing Belt in this manual.
4. Remove cylinder head cover LH.
   - Refer to removal procedure for Cylinder Head Cover LH in this manual.
5. Remove cylinder head cover RH.
   - Refer to removal procedure for Cylinder Head Cover RH in this manual.
6. Remove twenty fixing bolts from inlet and exhaust camshaft bracket on one side bank, then camshaft brackets.

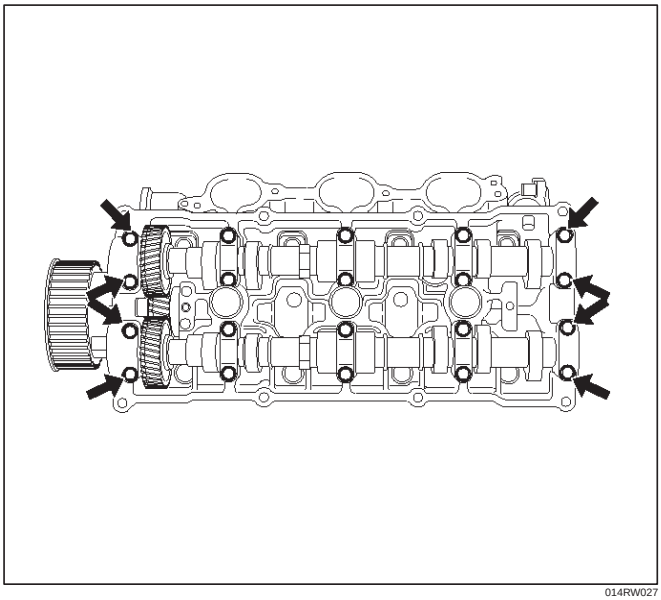

014RW027

7. Remove camshaft assembly.
8. Remove fixing bolt for camshaft drive gear pulley.
9. Remove three fixing bolts from camshaft drive gear retainer, then camshaft drive gear assembly.

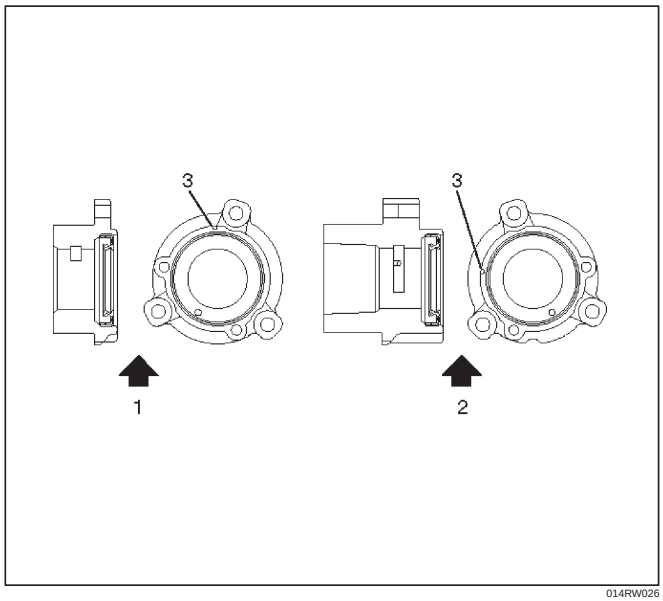

014RW026

Legend

(1) Right Bank
(2) Left Bank
(3) Timing Mark on Retainer

Installation

1. Install camshaft drive gear assembly and tighten three bolts to the specified torque.

   Torque : 10 N·m (1.0 kg·m/89 lb in)

2. Tighten bolt for camshaft drive gear assembly pulley to the specified torque.

   Torque : 98 N·m (10.0 kg·m/72 lb ft)

3. Tighten sub gear setting bolt.
   1. Use 5–8840–2443–0 to turn sub gear to right direction until it aligns with the M5 bolt hole between camshaft driven gear and sub gear.
   2. Tighten the M5 bolt to a suitable torque to prevent the sub gear from moving.

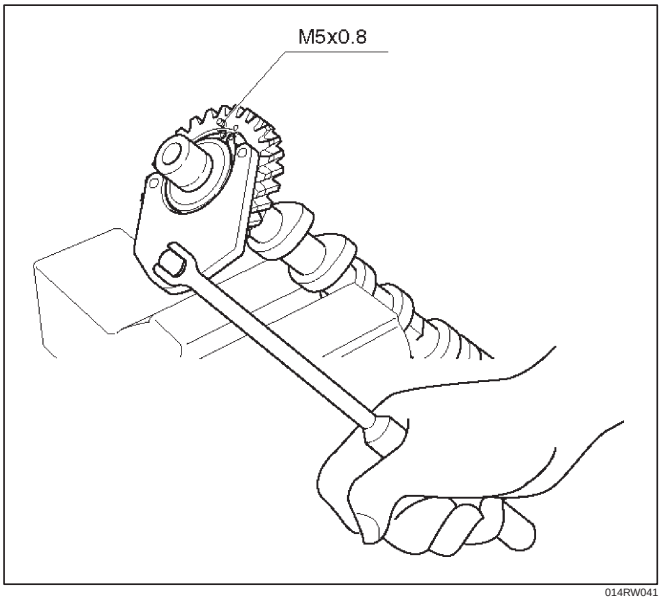

014RW041

4. Install camshaft assembly and camshaft brackets, tighten twenty bolts on one side bank to the specified torque.
   1. Apply engine oil to camshaft journal and bearing surface of camshaft bracket.
   2. Align timing mark on intake camshaft (one dot for right bank, two dot for left bank) and exhaust camshaft (one dot for right bank, two dots for left bank) to timing mark on camshaft drive gear (one dot).

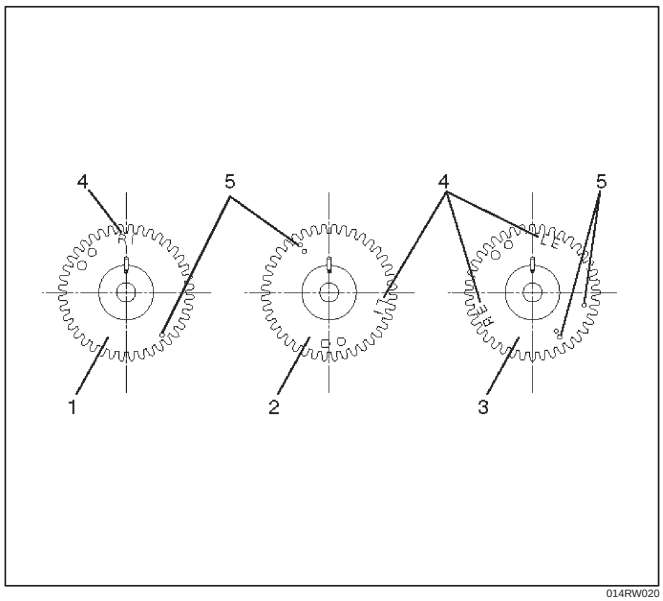

014RW020

Legend

(1) Intake Camshaft Timing Gear for Right Bank
(2) Intake Camshaft Timing Gear for Left Bank
(3) Exhaust Camshaft Timing Gear
(4) Discrimination Mark
(LI: Left bank intake, RI: Right bank intake)
(LE: Left bank exhaust, RE: Right bank exhaust)

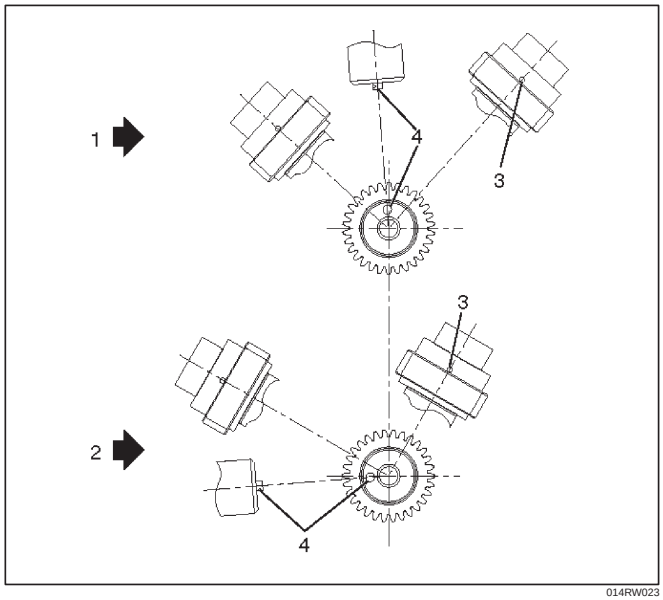

014RW023

Legend

(1) Right Bank Camshaft Drive Gear
(2) Left Bank Camshaft Drive Gear
(3) Timing Mark on Drive Gear
(4) Dowel Pin

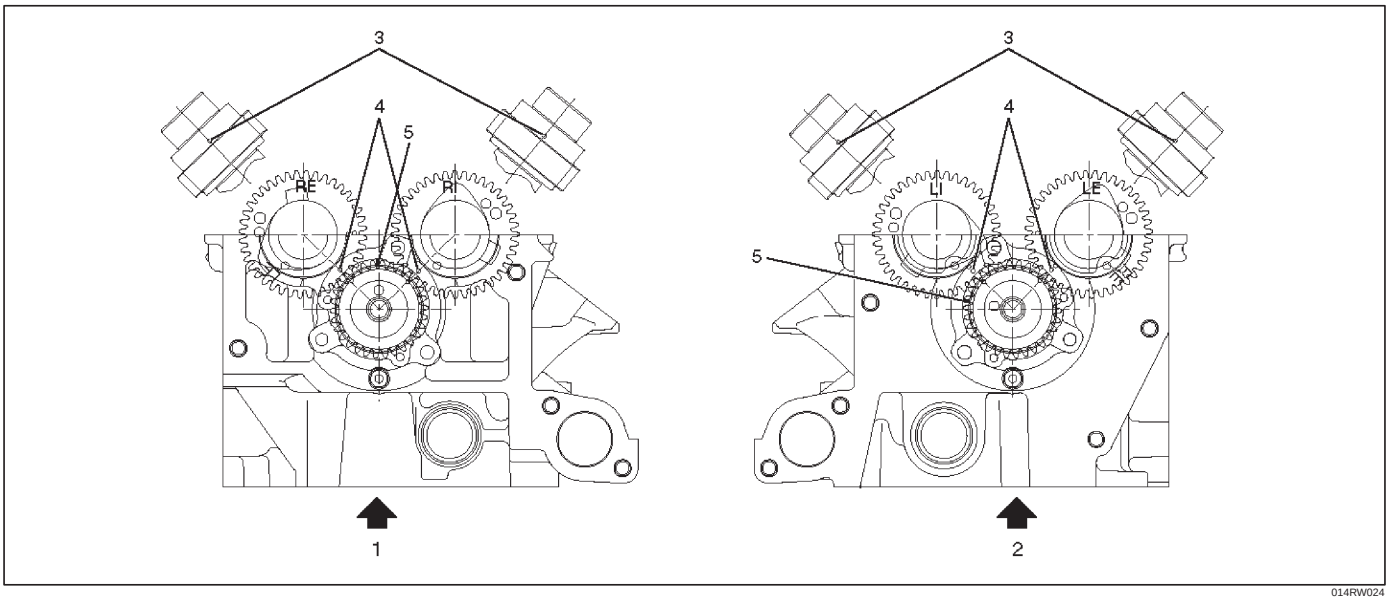

014RW024

Legend
(1) Right Bank
(2) Left Bank
(3) Alignment Mark on Camshaft Drive Gear
(4) Alignment Mark on Camshaft
(5) Alignment Mark on Retainer

3. Tighten twenty bolts on numerical order an one side bank as shown in the illustration.

Torque : 10 N·m (1.0 kg·m/89 lb in)

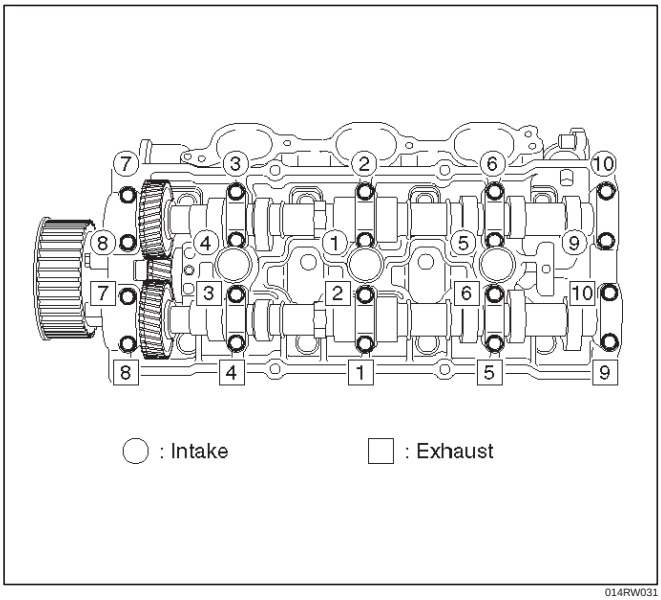

014RW031

5. Install cylinder head cover RH.
   - Refer to installation procedure for CYLINDER HEAD COVER RH in this manual.
6. Install cylinder head cover LH.
   - Refer to installation procedure for CYLINDER HEAD COVER LH in this manual.
7. Install timing belt.
   - Refer to installation procedure for TIMING BELT in this manual.
8. Install crankshaft pulley.
   - Refer to installation procedure for CRANKSHAFT PULLEY in this manual.
   - Don't need accelerator pedal cable adjustment.
   - Tighten the accelerator pedal cable nuts.

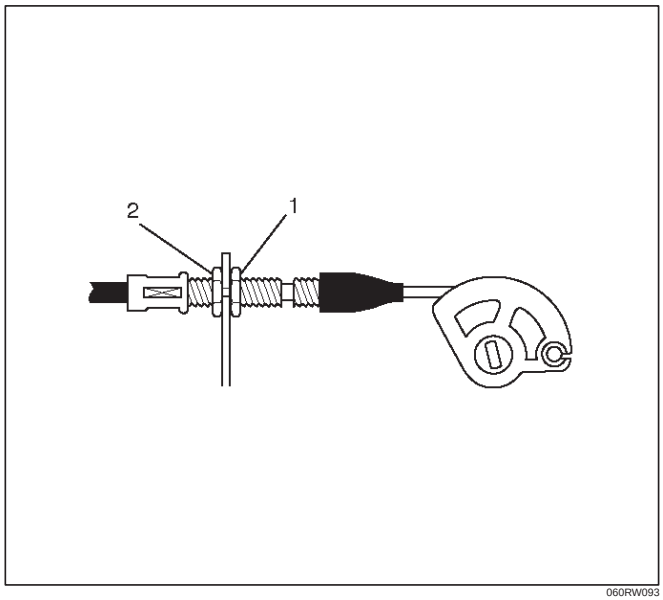

060RW093

Legend
(1) Lock Nut
(2) Nut

Cylinder Head

Removal

1. Remove engine hood.
2. Disconnect battery ground cable.
3. Drain radiator coolant.
4. Drain engine oil.
5. Remove crankshaft pulley.
   - Refer to removal procedure for Crankshaft Pulley in this manual.
6. Remove timing belt.
   - Refer to removal procedure for Timing Belt in this manual.
7. Remove cylinder head cover LH.
   - Refer to removal procedure for Cylinder Head Cover LH in this manual.
8. Remove cylinder head cover RH.
   - Refer to removal procedure for Cylinder Head Cover RH in this manual.
9. Remove common chamber.
   - Refer to removal procedure for Common Chamber in this manual.
10. Remove cylinder head assembly.
    1. Loosen eights bolts for tight cylinder head.
    2. Remove cylinder head assembly.

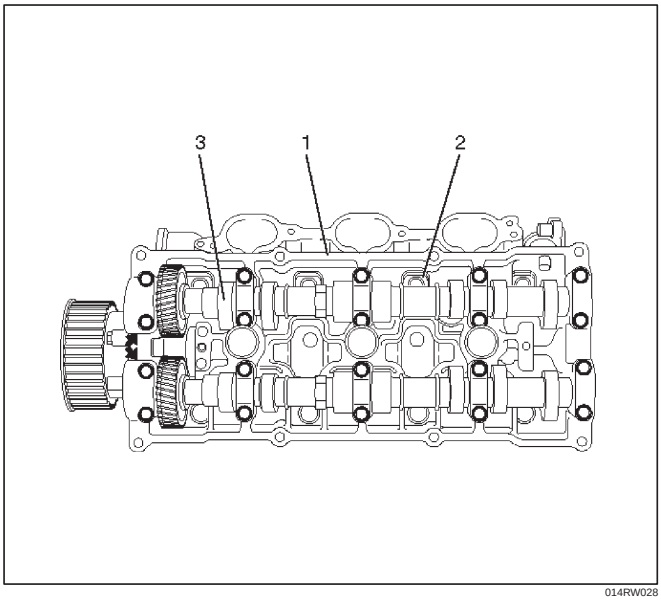

014RW028

Legend

(1) Cylinder Head
(2) Cylinder Head Bolt
(3) Camshaft

Installation

1. Install cylinder head assembly to cylinder block.
   1. Put cylinder head gasket on the cylinder block.

NOTE: There is discrimination mark “R” for right bank and “L” for left bank on the cylinder head gasket as shown in the illustration.

Do not reuse cylinder head gasket.

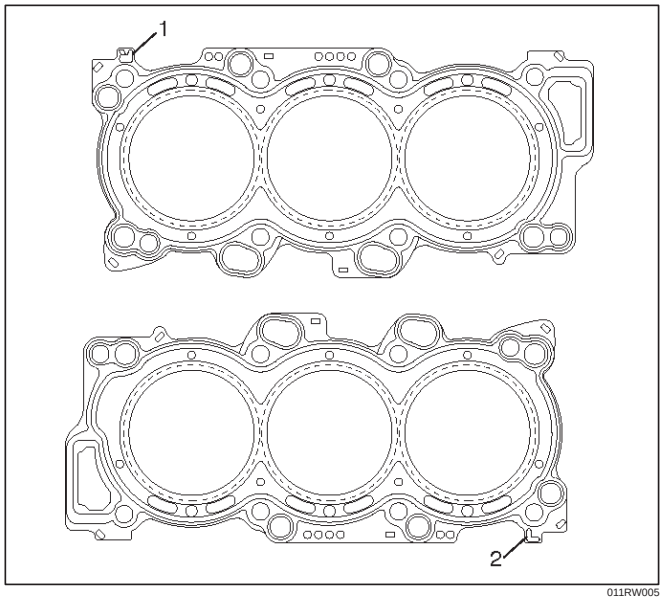

011RW005

   2. Align dowel pin hole to dowel pin on the cylinder block.
   3. Tighten two bolts temporarily by hand to prevent the cylinder head assembly from moving.
   4. Using 9–8511–4209–0 cylinder head bolt wrench, tighten bolts in numerical order as shown in the illustration to the specified torque.

NOTE: Do not reuse cylinder head bolts.

Do not apply any lubricant to the cylinder head bolts.

Torque :

Temporary : 29 N·m (3.0 kg·m/21 lb ft)

Final : 64 N·m (6.5 kg·m/47 lb ft)

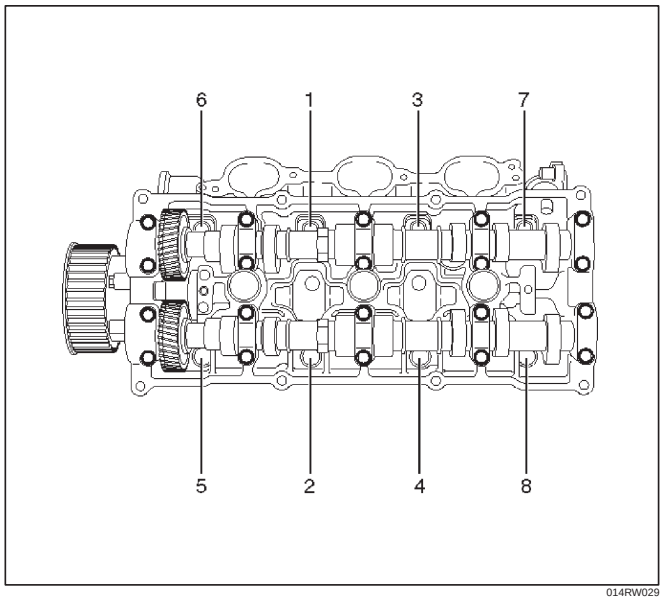

014RW029

2. Install common chamber.
   - Refer to installation procedure for Common Chamber in this manual.
3. Install cylinder head cover RH.
   - Refer to installation procedure for Cylinder Head Cover RH in this manual.
4. Install cylinder head cover LH.
   - Refer to installation procedure for Cylinder Head Cover LH in this manual.
5. Install timing belt.
   - Refer to installation procedure for Timing Belt in this manual.
6. Install crankshaft pulley.
   - Refer to installation procedure for Crankshaft Pulley in this manual.
   - Don’t need accelerator pedal cable adjustment.
   - Tighten the accelerator pedal cable.

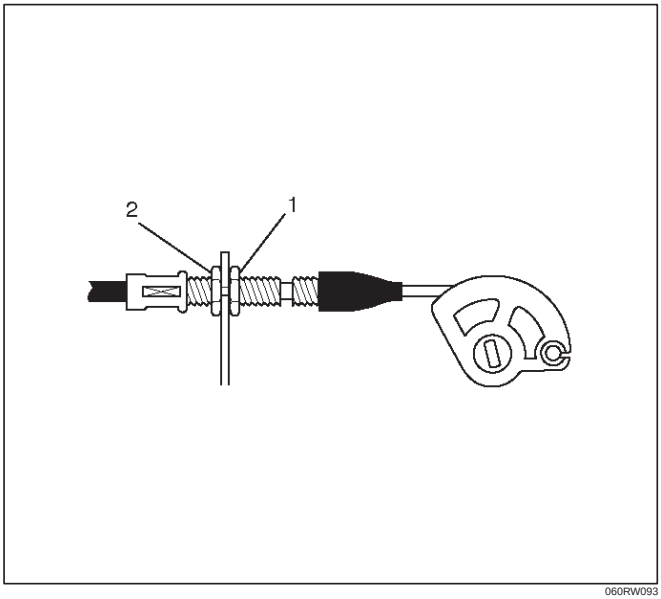

060RW093

Legend

(1) Lock Nut
(2) Nut

Valve Stem Oil Controller , Valve Spring and Valve Guide

Removal

1. Disconnect battery ground cable.
2. Drain engine oil.
   - Drain engine coolant.
3. Remove cylinder head assembly.
   - Refer to removal procedure for Cylinder Head in this manual.
4. Remove camshaft.
   - Refer to removal procedure for Camshaft in this manual.
5. Remove tappets with shim.

NOTE: Do not damage shim surface.

6. Remove valve springs using 5–8840–2446–0 valve spring compressor and 5–8840–2547–0 valve spring compressor adapter then remove upper valve spring seat and lower seat.

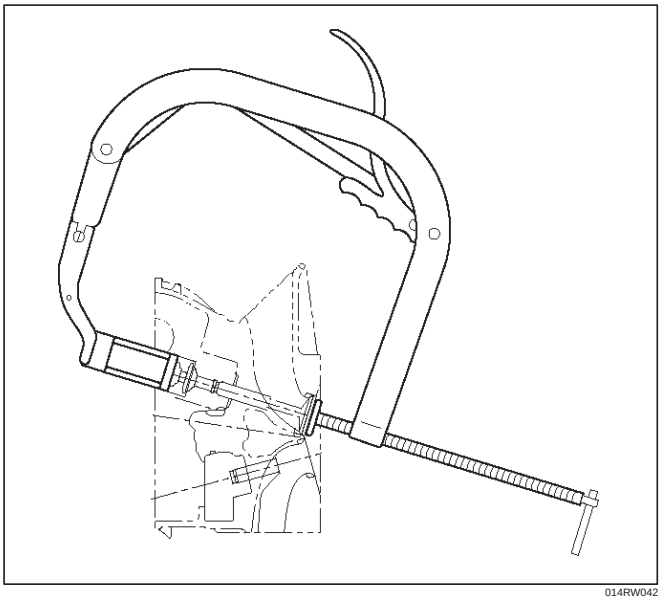

014RW042

7. Remove oil controller using 5–8840–0623–0 oil controller remover, remove each valve stem oil controller.
8. Remove valve guide using 5–8840–2549–0 valve guide replacer.

Installation

1. Install valve guide using 5–8840–2442–0 valve guide installer.
2. Install oil controller using 5–8840–0624–0 oil controller installer.
3. Install lower valve spring seat, valve spring and upper valve spring seat then put split collars on the upper spring seat, using 5–8840–2442–0 valve spring compressor and 5–8840–0624–0 valve spring compressor adapter to install the split collars.

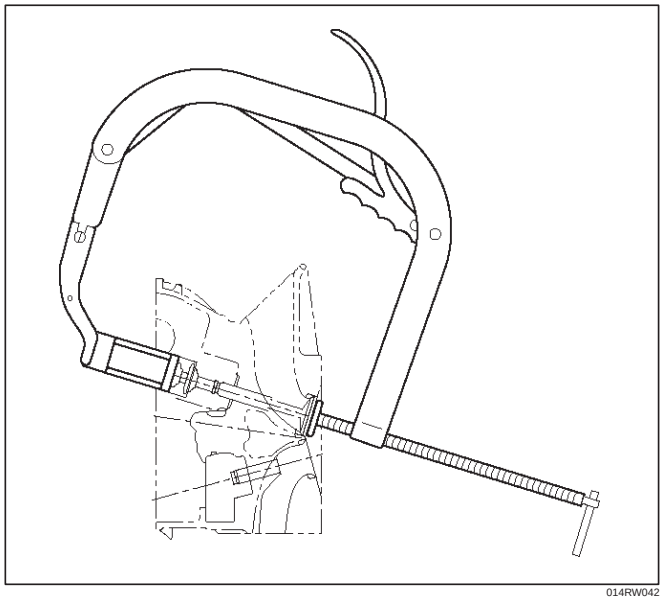

014RW042

4. Install tappet with shim.
5. Install camshaft assembly.
   - Refer to installation procedure for Camshaft in this manual.
6. Install cylinder head assembly.
   - Refer to installation procedure for Cylinder Head in this manual.
7. Fill engine oil until full level.
8. Fill engine coolant.

Piston, Piston Ring and Connecting Rod

Removal

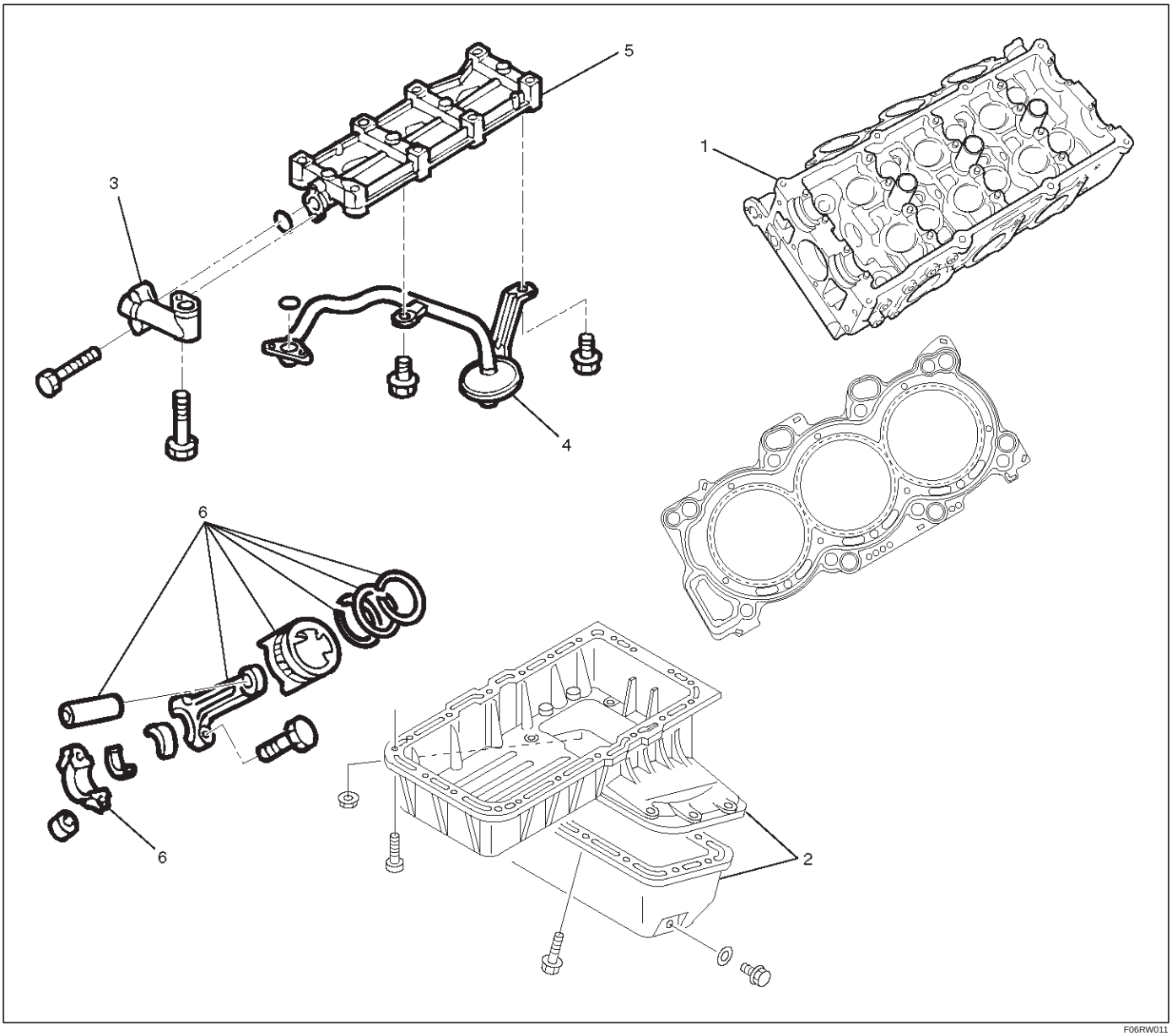

F06RW011

Legend

(1) Cylinder Head
(2) Crankcase with Oil Pan
(3) Oil Pipe
(4) Oil Strainer
(5) Oil Gallery
(6) Piston with Connecting Rod Assembly

1. Remove cylinder head assembly.
   - Refer to removal procedure for Cylinder Head in this manual.
2. Remove crankcase with oil pan.
   - Refer to removal procedure for Oil Pan and Crankcase in this manual.

3. Remove oil strainer fixing bolts, remove oil strainer assembly with O-ring.

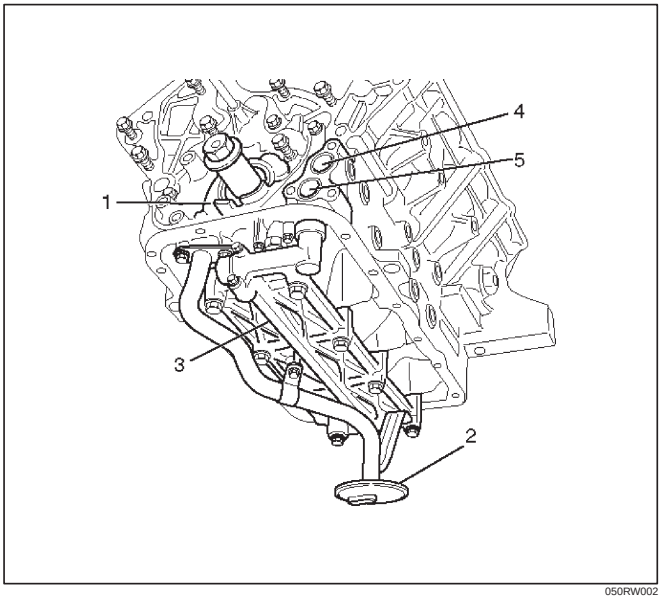

050RW002

Legend
(1) Oil Pump
(2) Oil Strainer
(3) Oil Gallery
(4) From Oil Filter
(5) To Oil Filter

4. Remove three fixing bolts, oil pipe with O-ring.
5. Remove eight fixing bolts, oil gallery.
6. Remove piston with connecting rod assembly, before removing the bearing cap, remove carbon on the top of cylinder bore and push piston with connecting rod out from the top of cylinder bore.

Installation

1. Install piston with connecting rod assembly.
   - Apply engine oil to cylinder bore, connecting rod bearing and crank pin.
     When installing the piston, its front mark must face the engine front side.
   - The bearing cap number must be the same as connecting rod number.
   - Apply engine oil to the thread and seating surface of each nut.
   - Tighten nuts to the specified torque.

   Torque : 54 N·m (5.5 kg·m/40 lb ft)

   - After tightening the nuts, make sure that the crankshaft rotates smoothly.

NOTE: Do not apply engine oil to the bearing back faces and connecting rod bearing fitting surfaces.

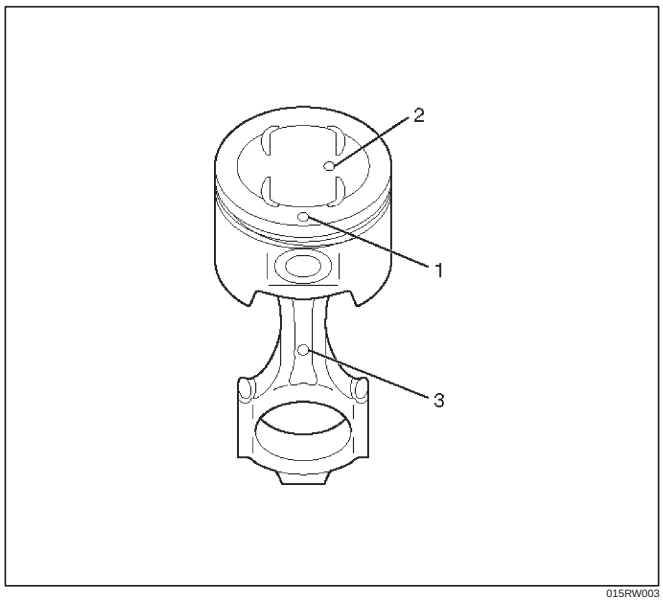

015RW003

Legend
(1) Piston Front Mark
(2) Piston Grade
(3) Connecting Rod Front Mark

2. Install oil gallery and tighten the bolts in two steps, in the order shown in illustration.

   Torque :

   1st step : 29 N·m (3.0 kg·m/21 lb ft)

   2nd step : 55°–65°

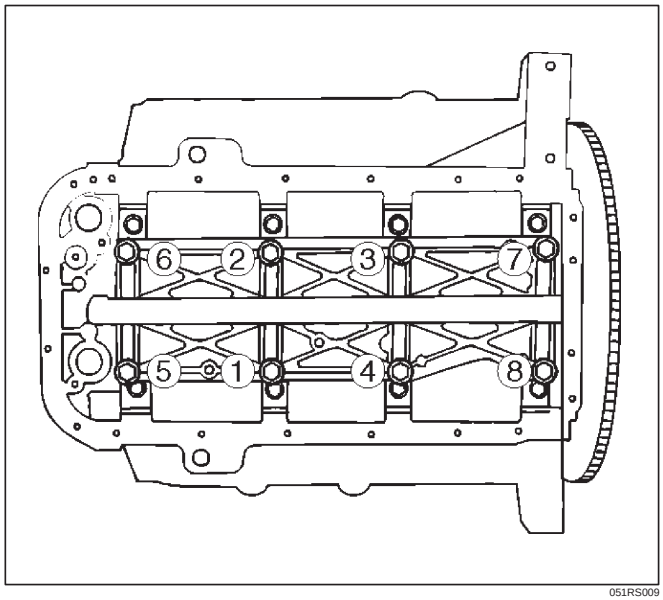

051RS009

3. Install oil pipe with O-ring.

   Torque : 10 N·m (1.0 kg·m/89 lb in)

4. Install oil strainer assembly with O-ring.

   Torque : 25 N·m (2.6 kg·m/18 lb ft)

5. Install crankcase with oil pan.
   - Refer to installation procedure for Oil Pan and Crankcase in this manual.
6. Install cylinder head assembly.
   - Refer to installation procedure for Cylinder Head in this manual.

Crankshaft and Main Bearings

Removal

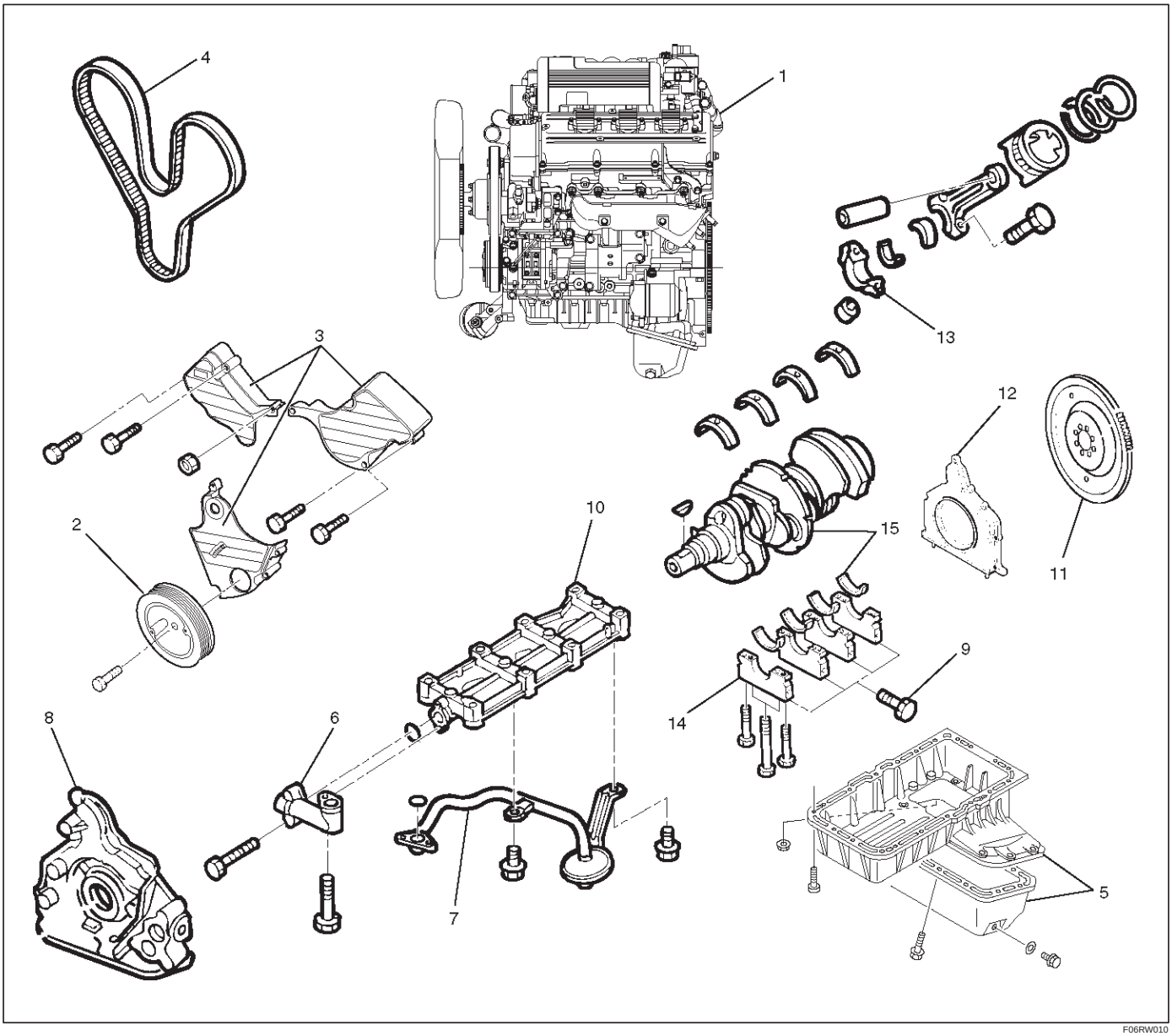

F06RW010

Legend

(1) Engine Assembly
(2) Crankshaft Pulley
(3) Timing Belt Cover
(4) Timing Belt
(5) Crankcase with Oil Pan
(6) Oil Pipe
(7) Oil Strainer
(8) Oil Pump Assembly
(9) Cylinder Body Side Bolt
(10) Oil Gallery
(11) Flywheel
(12) Rear Oil Seal Retainer
(13) Connecting Rod Cap
(14) Crankshaft Main Bearing Cap
(15) Crankshaft and Main Bearing

1. Remove engine assembly.
   - Refer to removal procedure for Engine Assembly in this manual.
2. Remove timing belt.
   - Refer to removal procedure for Timing Belt in this manual.
3. Remove oil pan and crankcase.
   - Refer to removal procedure for Oil Pan and Crankcase in this manual.
4. Remove oil pipe with O-ring.
5. Remove oil strainer assembly with O-ring.

6. Remove oil pump assembly.
   - Refer to removal procedure for Oil Pump in this manual.
7. Remove cylinder body side bolts.
8. Remove oil gallery.
9. Remove flywheel.
10. Remove rear oil seal retainer.
    - Refer to removal procedure for Rear Oil Seal in this manual.
11. Remove connecting rod caps.
12. Remove crankshaft main bearing caps.
13. Remove crankshaft and main bearings.

Installation

1. Install crankshaft and main bearings.
   - Install main bearing in the cylinder block and main bearing cap respectively.
     Apply new engine oil to upper and lower main bearings.

NOTE:

- Do not apply engine oil to the bearing back faces.
- Make sure that main bearings are in correct position.
- Install crankshaft with care.
- Apply engine oil to the thrust washer.
- Install thrust washer on No.3 journal.
- Oil grooves in thrust washer must face the crankshaft.

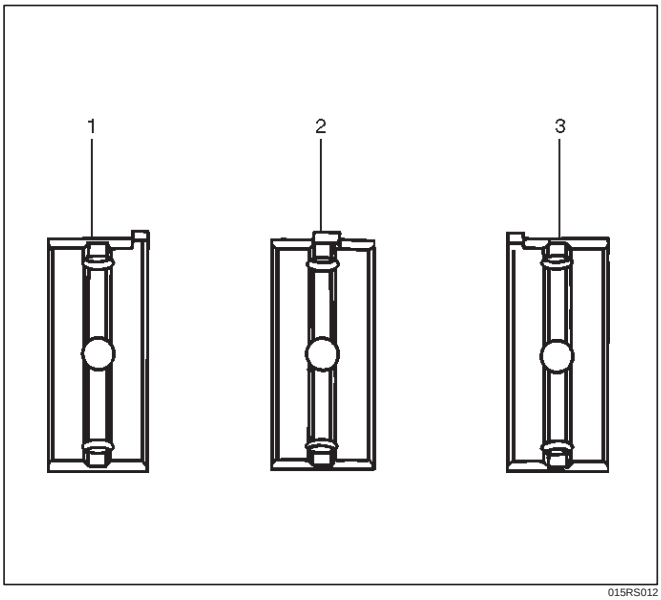

015RS012

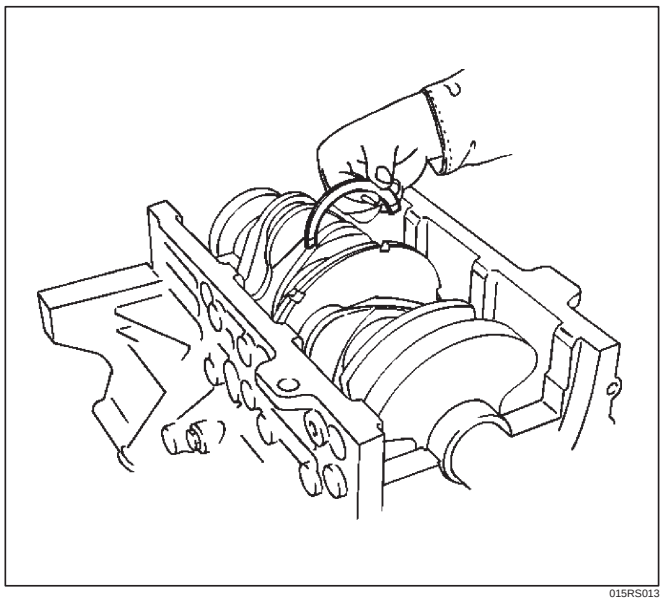
015RS013

2. Install crankshaft main bearing caps.
   - Apply engine oil to the thread and seating surface of each bearing cap fixing bolt.

NOTE:

- Do not apply engine oil to the bearing back faces.
- Install bearing caps in the order of numbers, starting with cylinder block front side.
- Tighten main bearing fixing bolts to the specified torque.

  Torque : 39 N·m (4.0 kg·m/29 lb ft)
- After tightening the bolts, make sure that the crankshaft rotates smoothly.

3. Install connecting rod caps.
   - The cap number must be same as connecting rod number.
   - Apply engine oil to the thread and seating surface of each nut.
   - Tighten nuts to the specified torque.

   Torque : 54 N·m (5.5 kg·m/40 lb ft)
   - After tightening the nuts, make sure that the crankshaft rotates smoothly.
4. Install rear oil seal retainer.
   - Remove oil on cylinder block and retainer fitting surface.
   - Apply sealant (TB1207B or equivalent) to retainer fitting surface as shown in illustration.
   - The oil seal retainer must be installed within 5 minutes after sealant application to prevent premature hardening of sealant.

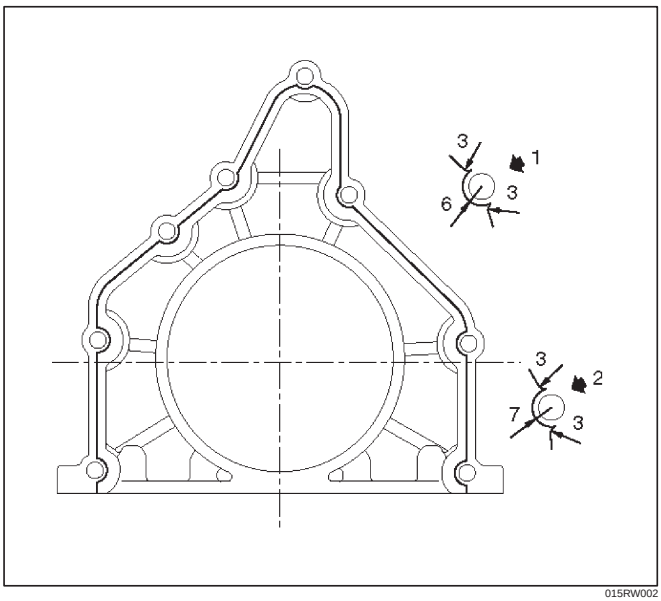

015RW002

Legend

(1) Around Bolt Holes
(2) Around Dowel Pin

- Apply engine oil to oil seal lip and align a dowel pin hole in the cylinder block with that in the retainer.
- Tighten retainer fixing bolts to the specified torque.

Torque : 18 N·m (1.8 kg·m/13 lb ft)

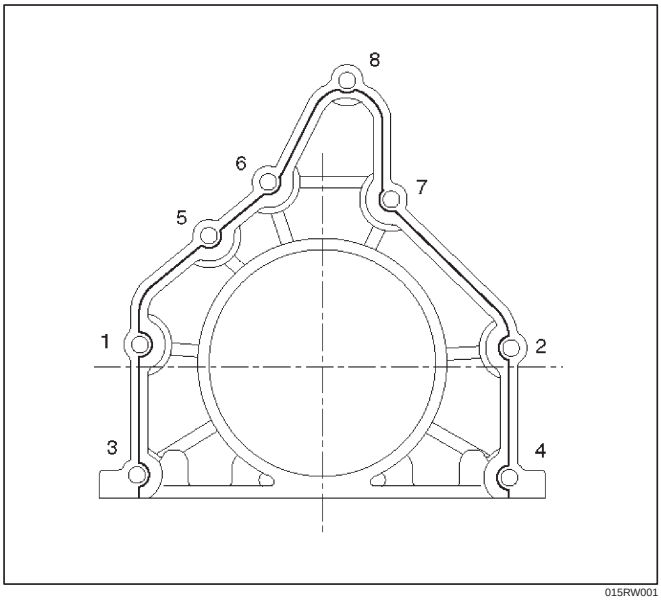

015RW001

5. Install flywheel.
   - Clean tapped holes in the crankshaft.
   - Remove oil on crankshaft and flywheel fitting surface.

NOTE:

- Do not reuse the bolts.
- Do not apply oil or thread lock to the bolts.
- Tighten fixing bolts to the specified torque.

Torque : 54 N·m (5.5 kg·m/40 lb ft)

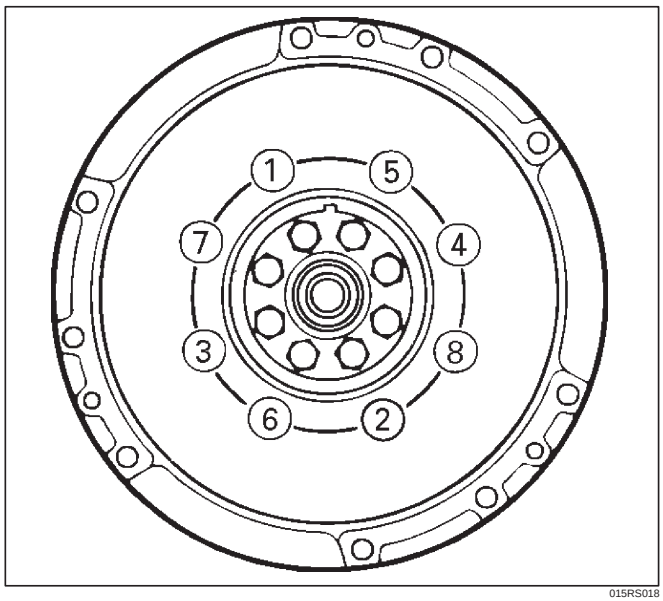

015RS018

6. Install oil gallery.
   - Clean contact surface of oil gallery and main bearing cap.
     Apply engine oil to oil gallery fixing bolts and tighten the bolts in two steps, in the order shown.

Torque :

1st step : 29 N·m (3.0 kg·m/21 lb ft)

2nd step : 55˚–65˚

7. Install cylinder body side bolts and tighten bolts in order to the specified torque.

Torque : 39 N·m (4.0 kg·m/29 lb ft)

NOTE: Do not apply the oil to the bolts.

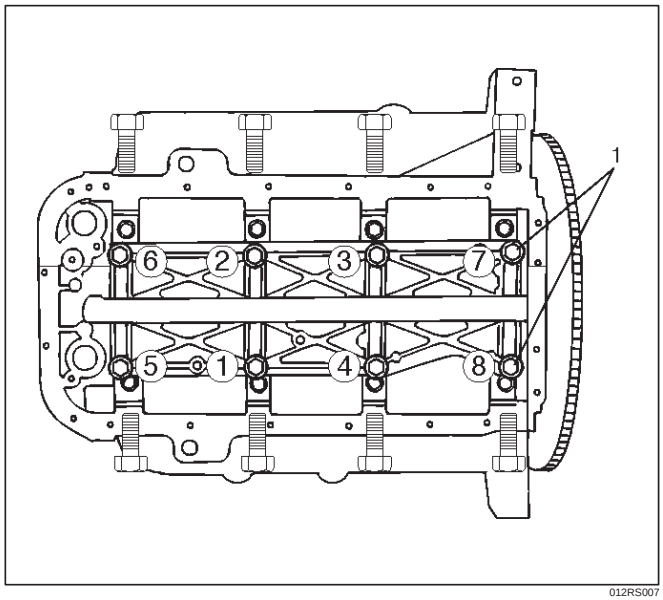

012RS007

8. Install oil pump assembly.
   - Remove oil on cylinder block and oil pump mounting surface.
   - Apply sealant (TB1207B or equivalent) to the oil pump mounting surface.
   - The oil pump assembly must be installed within 5 minutes after sealant application to prevent premature hardening of sealant.

- Apply engine oil to oil seal lip.
- Install oil pump in the cylinder block and tighten fixing bolts to the specified torque.

Torque : 25 N·m (2.6 kg·m/18 lb ft)

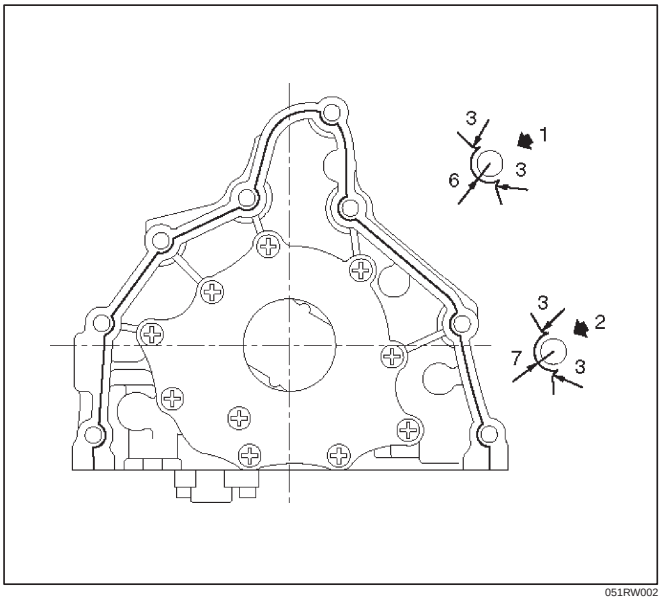

051RW002

Legend

(1) Around Bolt Holes
(2) Around Dowel Pin

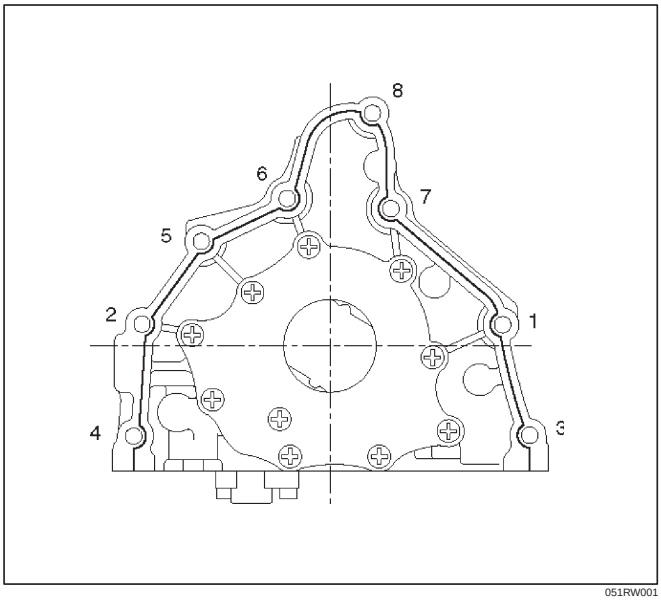

051RW001

9. Install oil strainer with O-ring, tighten to the specified torque.

   Torque : 25 N·m (2.6 kg·m/18 lb ft)

10. Install oil pipe with O-ring, tighten fixing bolts to the specified torque.

    Torque : 25 N·m (2.6 kg·m/18 lb ft)

11. Install crankcase.
    - Remove oil on crankcase mounting surface and dry the surface.
    - Properly apply a 4.5 mm (0.7 in) wide bead of sealant (TB1207C or equivalent) to the crankcase mounting surface. The bead must be continuous.
    - The crankcase must be installed within 5 minutes after sealant application to prevent premature hardening of sealant.
    - Tighten fixing bolts to the specified torque.

    Torque : 10 N·m (1.0 kg·m/89 lb in)

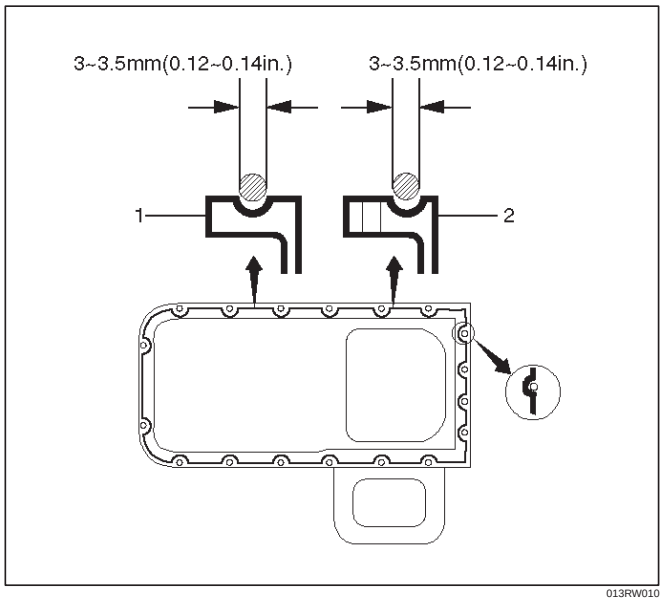

013RW010

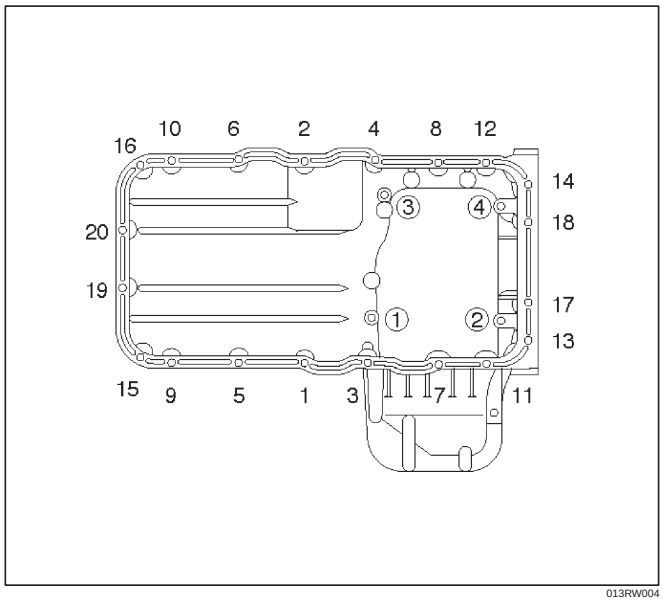

013RW004

12. Install oil pan
    - Remove oil on oil pan mounting surface and dry the surface.
    - Properly apply a 4.5 mm (0.7 in) wide bead of sealant (TB1207C or equivalent) to the oil pan mounting surface. The bead must be continuous.
    - The oil pan must be installed within 5 minutes after sealant application to prevent premature hardening of sealant.

- Tighten fixing bolts to the specified torque.

Torque : 25 N·m (2.6 kg·m/18 lb ft)

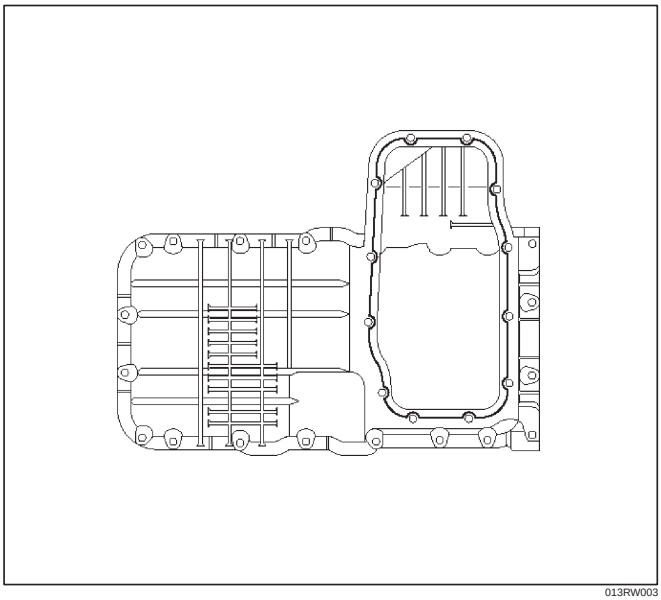

013RW003

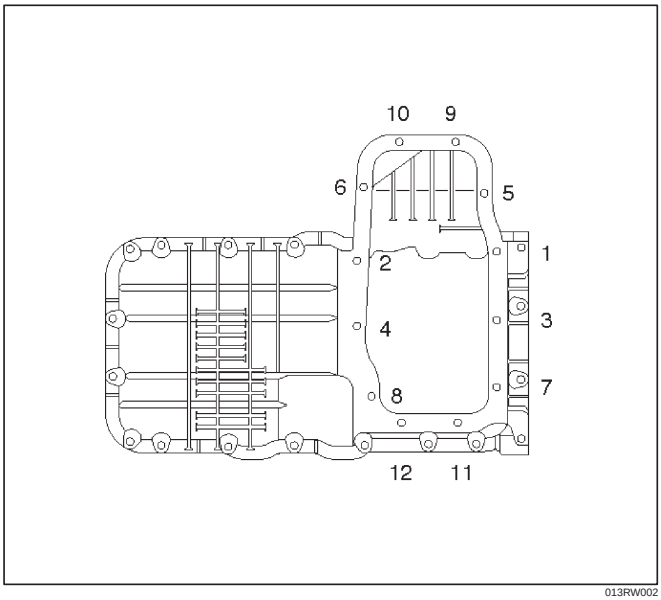

013RW002

13. Install timing belt.
    - Refer to installation procedure for Timing Belt in this manual.
14. Install engine assembly.
    - Refer to installation procedure for Engine Assembly in this manual.

Rear Oil Seal

Removal

1. Remove transmission assembly.
   - See Transmission section in this manual.
2. Remove flywheel.
3. Remove rear oil seal using a seal remover.

NOTE: Take care not to damage the crankshaft or oil seal retainer when removing oil seal.

Installation

1. Apply engine oil to oil seal lip and install oil seal using 5–8840–2286–0.

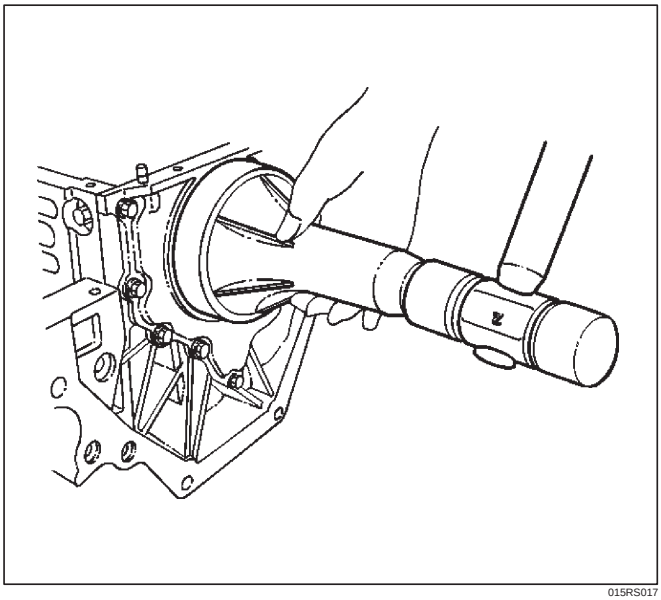

015RS017

2. Install flywheel.
   - Clean tapped holes in the crankshaft.
   - Remove oil on the crankshaft and flywheel mounting surface.
   - Tighten fixing bolts to the specified torque.

NOTE: Do not reuse the bolts and do not apply oil or thread lock to the bolts.

Torque : 54 N·m (5.5 kg·m/40 lb ft)

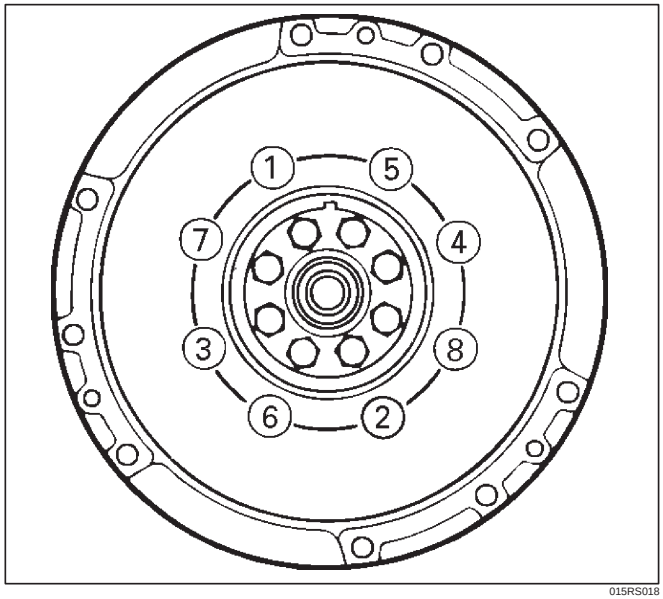

015RS018

3. Install transmission.
   - See Transmission section in this manual.

CAUTION: When assembling the engine and transmission, confirm that dowels have been mounted in the specified positions at the engine side. Take care that dowel positions are different between the manual transmission and the automatic transmission.
Otherwise, the transmission may be damaged.

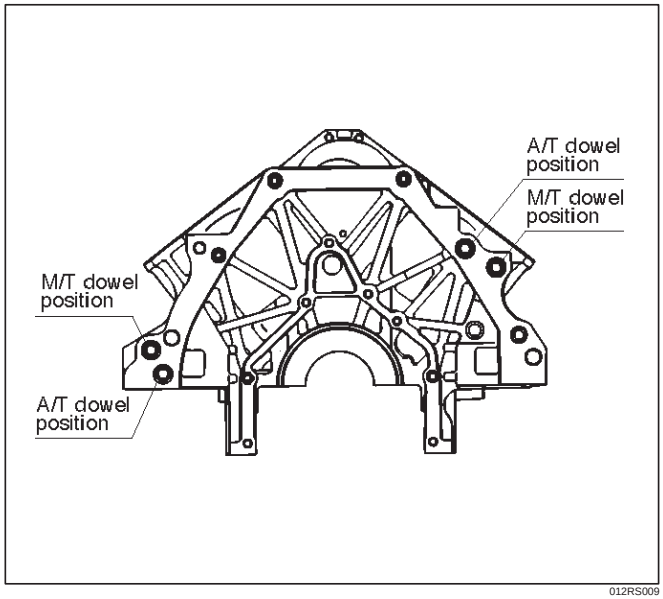

012RS009

Engine Assembly

Removal

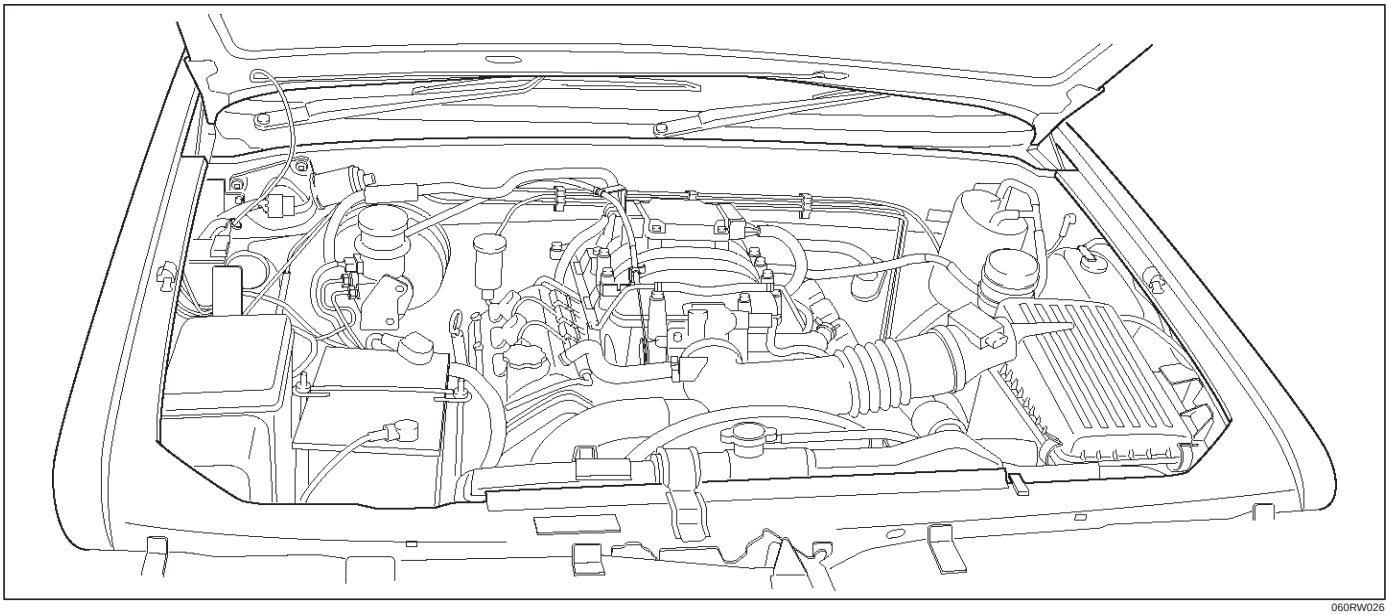

060RW026

1. Disconnect battery ground and positive cable.
2. Remove battery.
3. Make alignment mark on the engine hood and hinges before removal in order to return the hood to original position exactly.
4. Remove engine hood.
5. Drain radiator coolant.
6. Disconnect accelerator cable and automatic cruise control cable from throttle valve on common chamber.
7. Remove the ECM.
   - Disconnect the two connectors from the ECM.
   - Remove fixing bolts on the common chamber.
   - Remove fixing bolts for ground cable.
8. Disconnect air duct with air cleaner cover.
9. Remove air cleaner assembly.
10. Disconnect canister vacuum hose.
11. Disconnect vacuum booster hose.
12. Disconnect three engine harness connectors.
13. Disconnect harness connector to transmission (left front side of engine compartment), disconnect shift on the fly harness connector from front side of front axle and remove transmission harness bracket from engine left side.
14. Disconnect ground cable between engine and frame.
15. Disconnect bonding cable connector on the back of right dash panel.
16. Disconnect bonding cable terminal on the left bank.
17. Disconnect starter harness connector from starter.
18. Disconnect generator harness connector from generator.
19. Disconnect coolant reserve tank hose from radiator.
20. Remove radiator upper and lower hoses.
21. Remove upper fan shroud.
22. Remove cooling fan assembly four fixing nuts, then the cooling fan assembly.
23. Move drive belt tensioner to loose side using wrench then remove drive belt.
24. Remove power steering pump fixing bolts, then power steering pump. Place the power steering pump along with piping on the body side.
25. Remove air conditioning compressor fixing bolts from bracket and place the compressor along with piping on the body side.
26. Remove four O_2 sensor harness connectors (two each bank) from exhaust front pipe.
27. Remove three exhaust pipe fixing nuts from each bank.
28. Remove two exhaust pipe fixing nuts from each exhaust pipe, then move exhaust pipe to rear side of vehicle.
29. Remove flywheel dust covers.
30. Disconnect two heater hoses from engine.
31. Disconnect fuel hose from right side of transmission.

CAUTION: Plug fuel pipe on engine side and fuel hose from fuel tank.

32. Remove transmission assembly. Refer to Transmission section in this manual.
33. Support the engine by engine hoist.
34. Remove two left side engine mount fixing bolts from engine mount on chassis side.
35. Remove two right side engine mount fixing bolts from engine mount on chassis side.
36. Remove engine assembly.

Installation

CAUTION: When assembling the engine and transmission, confirm that dowels have been mounted in the specified positions at the engine side. Also take care that dowel positions are different between the manual transmission and the automatic transmission.
Otherweise, the transmission may be damaged.

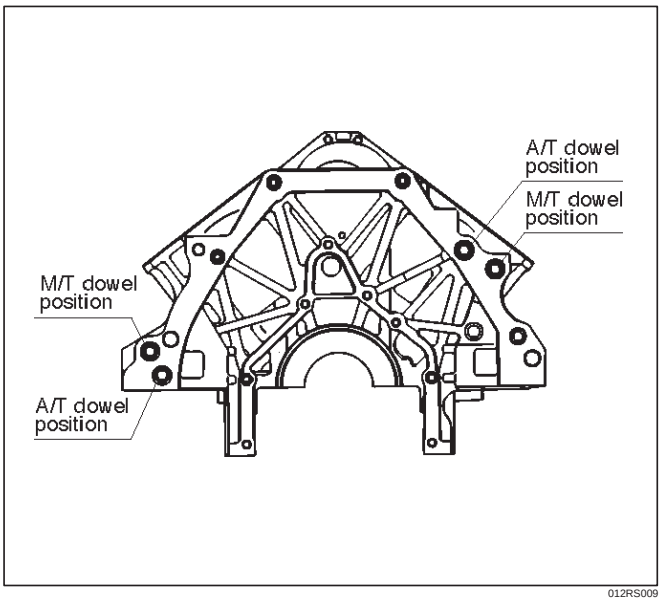

012RS009

1. Install engine assembly. Tighten engine mount fixing bolts to frame to the specified torque.

   Torque: 41 N·m (4.2 kg·m/30 lb ft)

2. Reconnect fuel hose to fuel pipe on engine.
3. Install transmission assembly. Refer to Transmission section in this manual.
4. Reconnect two heater hoses to engine.
5. Install flywheel dust covers.
6. Install exhaust pipe and temporally tighten two (each bank) rear exhaust flange nuts then tighten three stud nuts (each bank) between exhaust manifold and exhaust pipe, finally tighten rear side nuts to the specified torque.

   Torque:
   Nuts: 43 N·m (4.4 kg·m/32 lb ft)
   Stud nuts: 67 N·m (6.8 kg·m/49 lb ft)

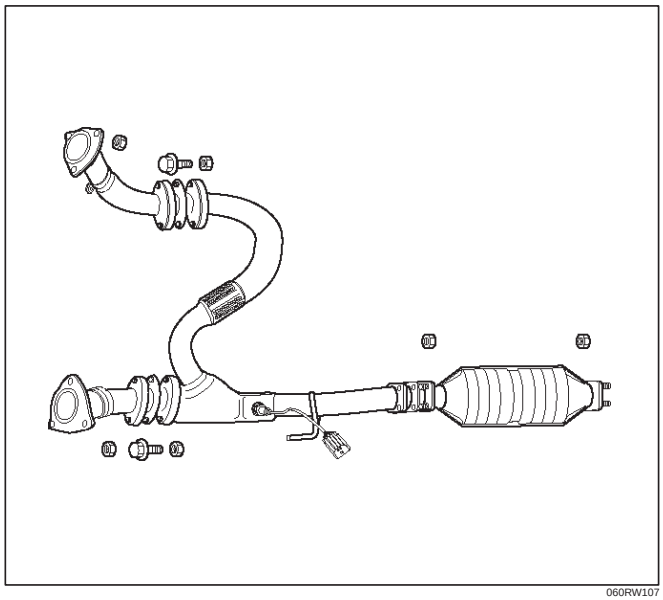

060RW107

7. Reconnect O_2 sensor connector.
8. Install cooling fan assembly and tighten bolts/nuts to the specified torque.

   Torque : 22 N·m (2.2 kg·m/16 lb ft) for fan pulley and fan bracket.

   Torque : 10 N·m (1.0 kg·m/88.5 lb in) for fan and clutch assembly.

9. Install air conditioner compressor to engine and tighten to the specified torque.

   6VD1

   Torque : 43 N·m (4.4 kg·m/32 lb ft)

10. Install power steering pump, tighten fixing bolt to the specified torque.

    Torque :
    M8 bolts : 22 N·m (2.2 kg·m/16 lb ft)
    M10 bolts : 46 N·m (4.7 kg·m/34 lb ft)

11. Move drive belt tensioner to loose side using wrench, then install drive belt to normal position.

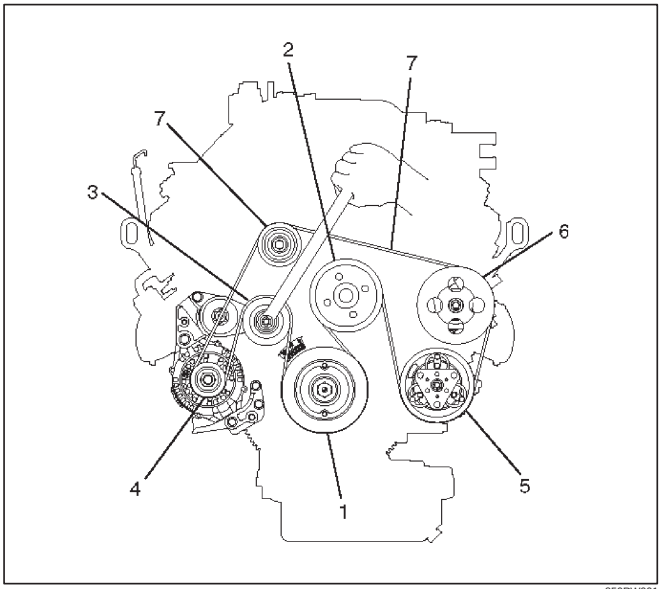

850RW001

Legend

(1) Crankshaft Pulley
(2) Cooling Fan Pulley
(3) Tensioner
(4) Generator
(5) Air Conditioner Compressor
(6) Power Steering Oil Pump
(7) Drive Belt

12. Install upper fan shroud.
13. Reconnect radiator upper and lower hoses.
14. Reconnect coolant reserve tank hose to radiator.
15. Reconnect generator harness connector.
16. Reconnect starter harness connector.
17. Reconnect bonding cable terminal on left bank
18. Reconnect bonding cable terminal on the back of right dash panel.
19. Reconnect ground cable between engine and chassis.
20. Reconnect harness connector to transmission and install transmission harness bracket on engine left side.
21. Reconnect three engine harness connectors.
22. Reconnect vacuum booster hose.
23. Reconnect canister vacuum hose.
24. Install air cleaner assembly.
25. Reconnect air duct.
26. Reconnect accelerator cable to throttle valve on common chamber.

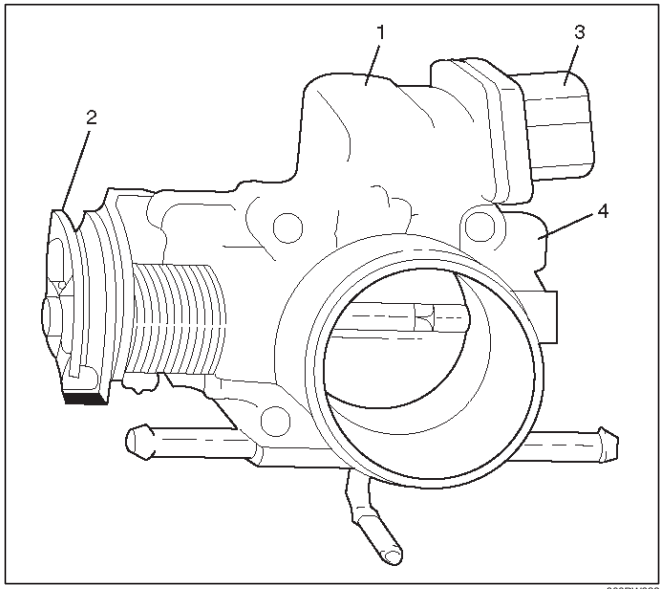

060RW083

Legend

(1) Throttle Valve Assembly
(2) Throttle Lever
(3) Idle Air Control Valve
(4) Throttle Position Sensor

27. Install the ECM.
    - Tighten the four bolts.

    Torque : 10 N·m (1.0 kg·m/7 lb ft)

    - Connect the two connectors.
    - Tighten the two ground cable bolts.

28. Install engine hood to the origine position.
    - Refer to installation procedure for Body section in this manual.
    - Don’t need accelerator pedal cable adjustment.
    - Tighten the accelerator pedal cable nuts.

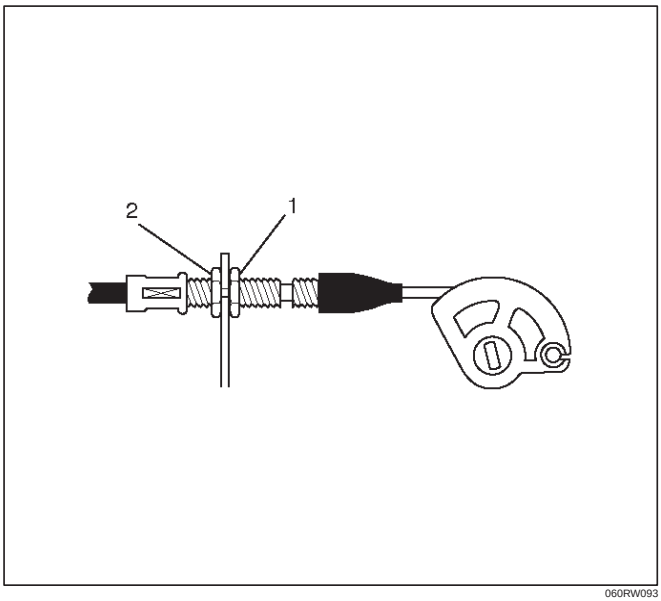

060RW093

Legend

(1) Lock Nut
(2) Nut

Cylinder Head

Cylinder Head and Associated Parts

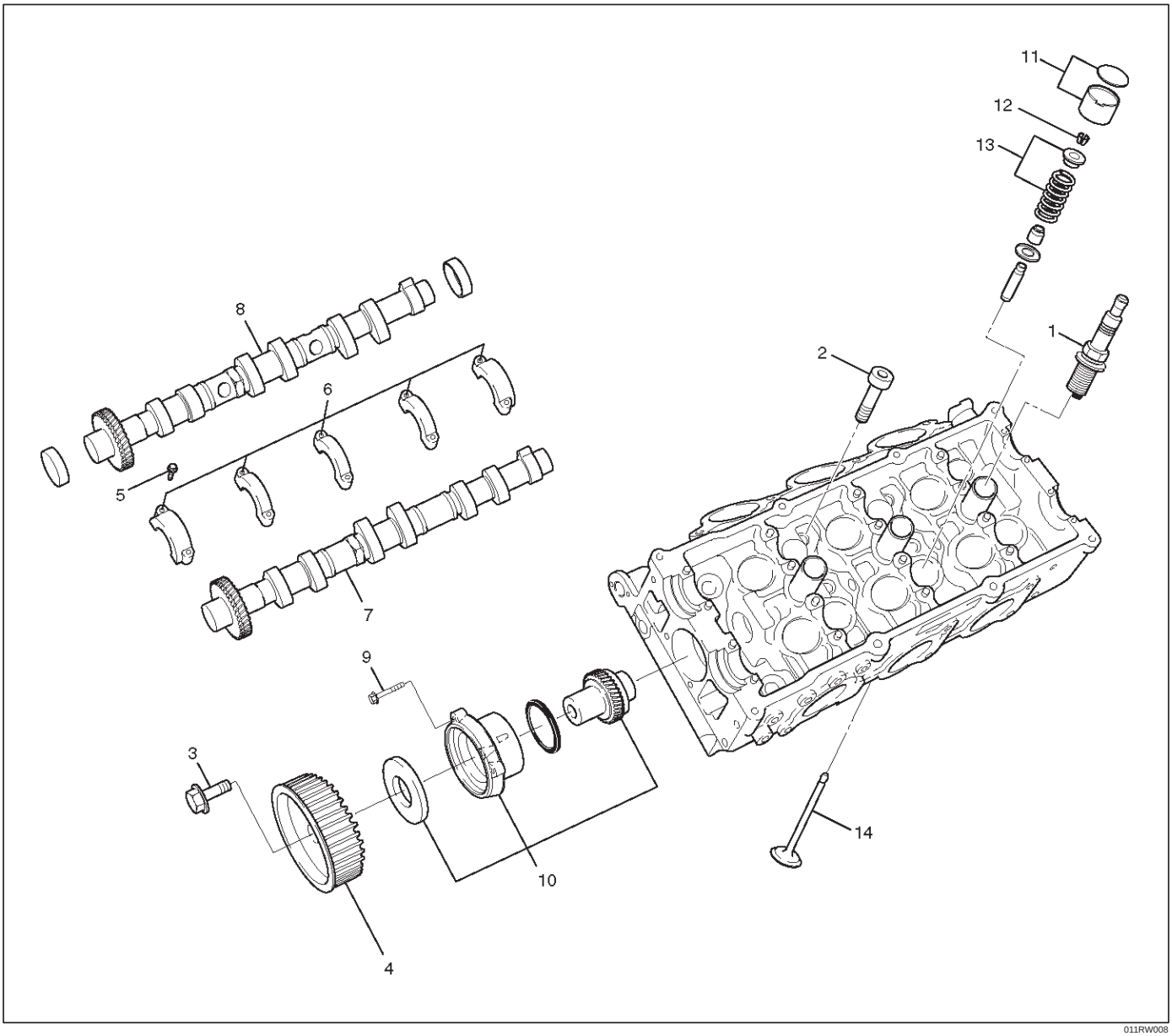

011RW008

Legend

(1) Spark Plug
(2) Cylinder Head Bolt
(3) Camshaft Drive Gear Pulley Fixing Bolt
(4) Camshaft Drive Gear Pulley
(5) Camshaft Bracket Fixing Bolt
(6) Camshaft Bracket
(7) Camshaft Exhaust
(8) Camshaft Intake
(9) Retainer Fixing Bolt
(10) Retainer Assembly
(11) Tappet with Shim
(12) Split Collar
(13) Valve Spring and Spring Upper Seat
(14) Valve

Disassembly

NOTE:

- During disassembly, be sure that the valve train components are kept together and identified so that they can be reinstalled in their original locations.
- Before removing the cylinder head from the engine and before disassembling the valve mechanism, perform a compression test and note the results.

1. Remove camshaft drive gear pulley fixing bolt (3), then pulley (4).

2. Remove camshaft bracket fixing bolt (5), camshaft bracket (6), then camshaft exhaust (7), and intake side (8).
3. Remove tappet with shim (11).
4. Use the 5–8840–2446–0 valve spring compressor and 5–8840–2547–0 valve spring compressor adapter to remove the split collar (12), valve spring with upper seat (13) and valve (14).

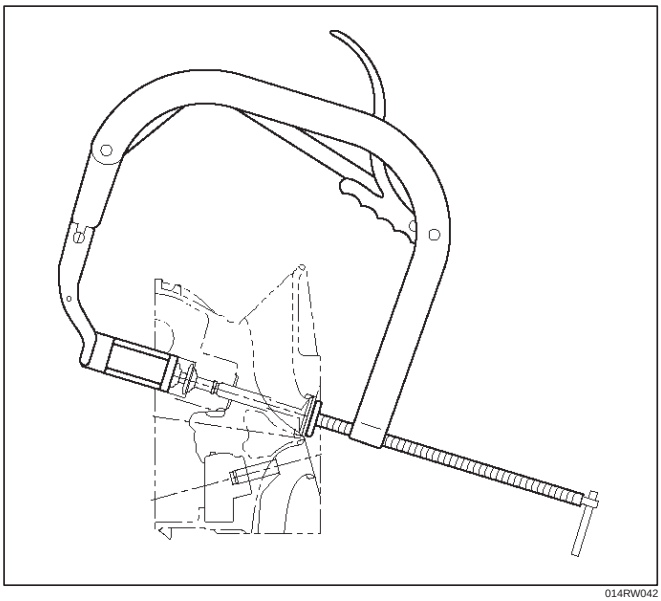

014RW042

5. Remove spark plug (1).

CAUTION: Do not remove the spark plugs when the head and plugs are hot. Clean dirt and debris from spark plug recess areas before removal.

Clean

Cylinder head

Carefully remove all varnish, soot and carbon from the bare metal. Do not use a motorized wire brush on any gasket sealing surface.

Inspection and Repair

1. Cylinder head gasket and mating surfaces for leaks, corrosion and blow–by. If the gasket has failed, determine the cause.
   – Insufficient torque on head bolts
   – Improper installation
   – Loose or warped cylinder head
   – Missing dowel pins
   – Warped case surface
2. Cylinder head for cracks, especially between valve seats and in the exhaust ports.
3. Cylinder head deck for corrosion, sand particles in head and porosity.

CAUTION:

- **Do not attempt to weld the cylinder head. Replace it.**
- **Do not reuse cylinder head bolts.**

4. Cylinder head deck, common chamber and exhaust manifold mating surfaces for flatness. These surfaces may be reconditioned by milling. If the surfaces are “out of flat” by more than specification, the surface should be ground to within specifications. Replace the head if it requires machining beyound the repairable limit.

   Head surface and manifold surface

   Standard: 0.05 mm (0.002 in) or less

   Warpage limit: 0.2 mm (0.0079 in)

   Maximum Repairable limit: 0.2 mm (0.0079 in)

   Head height

   Standard height : 133.2 mm (5.2441 in)

   Warpage limit : 0.2 mm (0.0079 in)

   Maximum Repairable limit : 133.0 mm (5.2362 in)

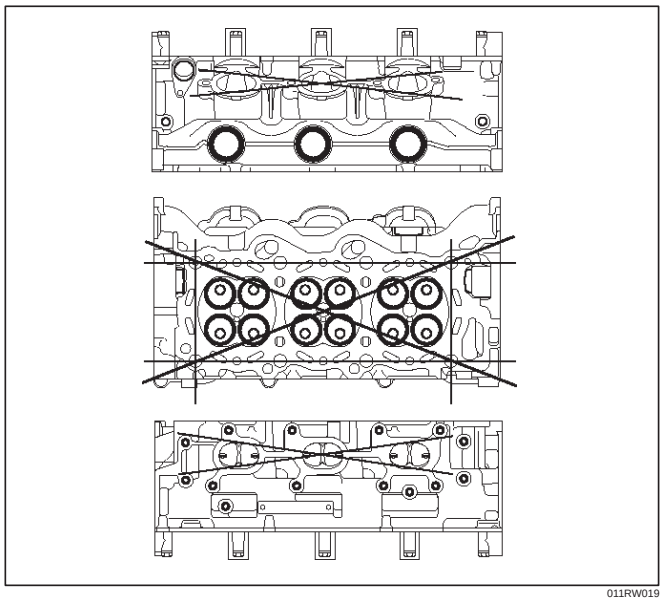

011RW019

5. Water jacket sealing plugs seating surfaces.

Reassembly

1. Install Spark plug and tighten all the spark plugs to specified torque.

   Torque: 18 N·m (1.8 kg·m/13 lb ft)

2. Tighten sub gear setting bolt.
   1. Use 5–8840–2443–0 gear spring lever to turn sub gear to right direction until the M5 bolt aligns with the hole between camshaft driven gear and sub gear.
   2. Tighten the M5 bolt to a suitable torque to prevent the sub gear from moving.

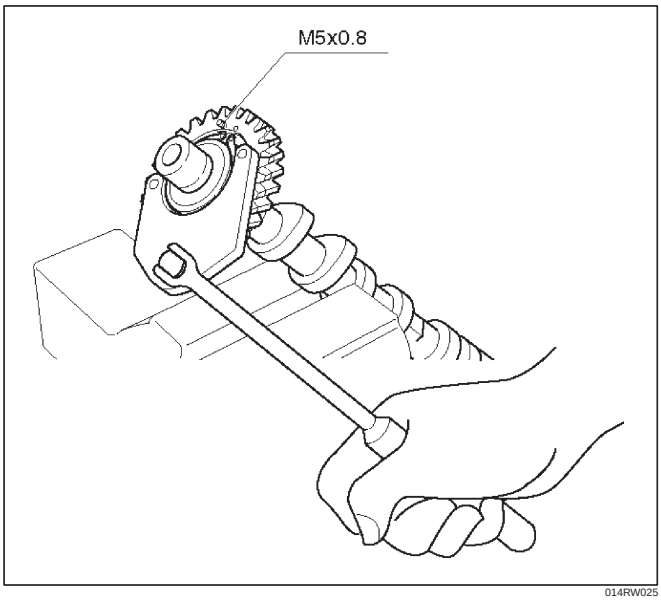

014RW025

3. Install camshaft drive gear assembly and tighten three bolts to the specified torque.

   Torque: 10 N·m (1.0 kg·m/89 lb in)

4. Install camshaft assembly and camshaft brackets, tighten twenty bolts on one side bank to the specified torque.
   1. Apply engine oil to camshaft journal and bearing surface of camshaft bracket.
   2. Align timing mark on intake camshaft (one dot for right bank, two dots for left bank) and exhaust camshaft (one dot for right bank, two dots for left bank) to timing mark on camshaft drive gear (one dot).

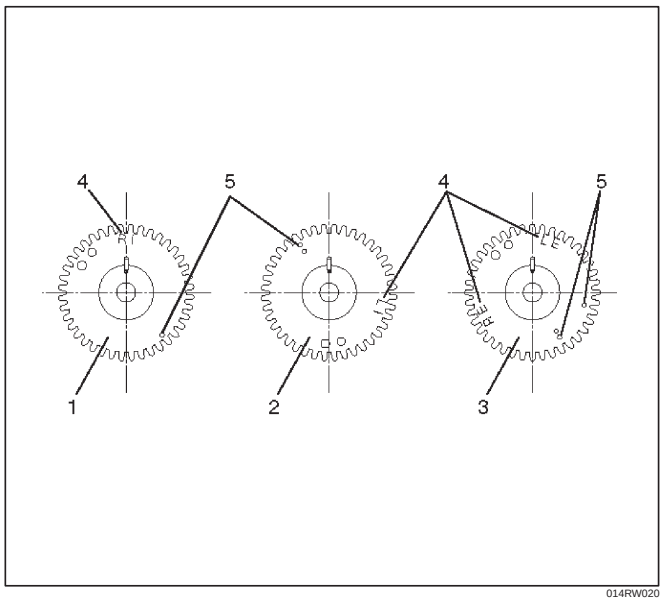

014RW020

Legend

(1) Intake Camshaft Timing Gear for Right Bank
(2) Intake Camshaft Timing Gear for Left Bank
(3) Exhaust Camshaft Timing Gear
(4) Discrimination Mark
LI: Left Bank Intake
RI: Right Bank Intake
LE: Left Bank Exhaust
RE: Right Bank Exhaust

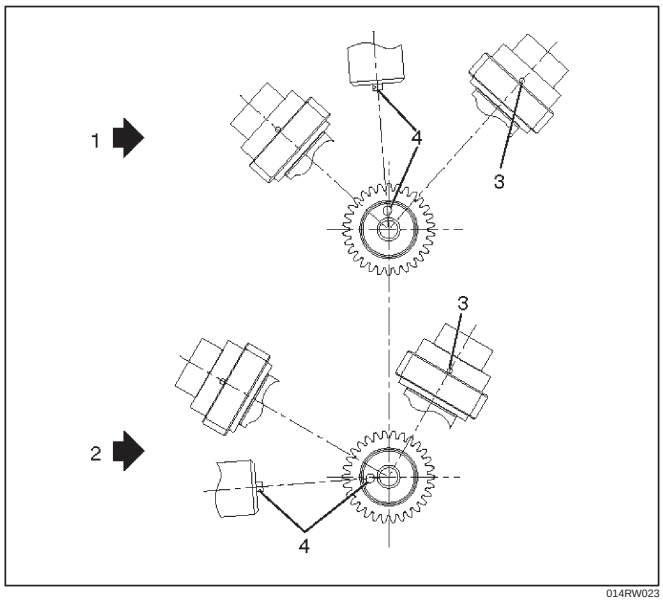

014RW023

Legend

(1) Right Bank Camshaft Drive Gear
(2) Left Bank Camshaft Drive Gear
(3) Timing Mark on Drive Gear
(4) Dowel Pin

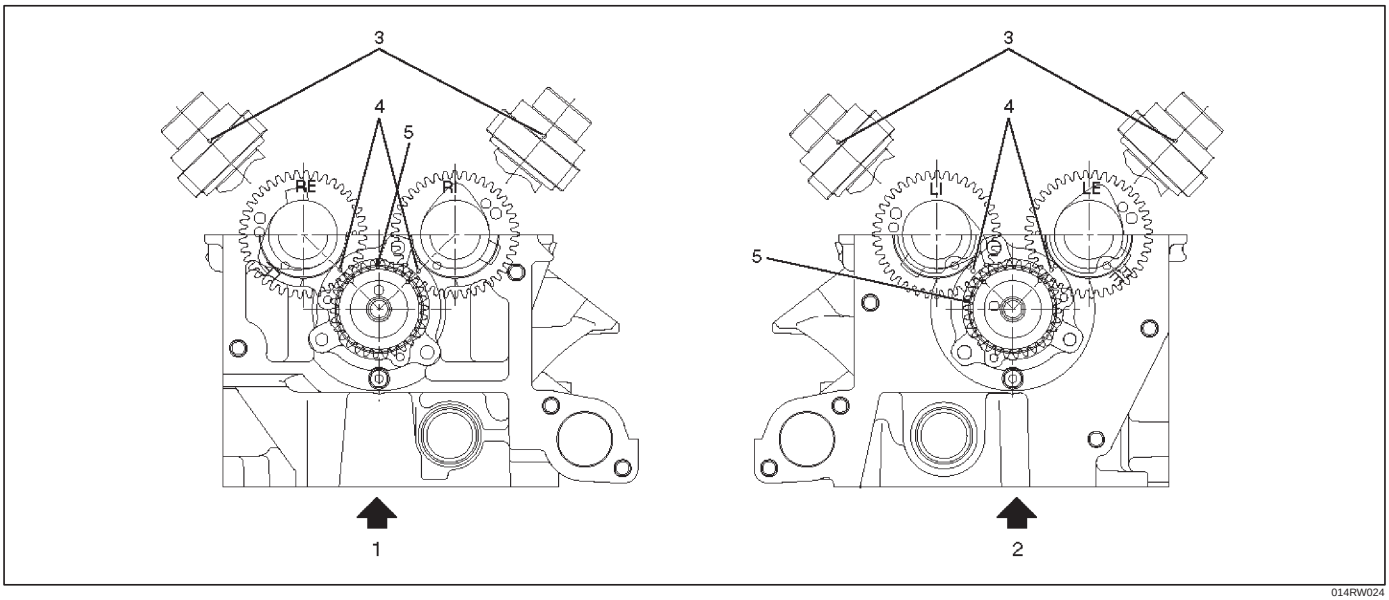

014RW024

Legend

(1) Right Bank
(2) Left Bank
(3) Alignment Mark on Camshaft Drive Gear
(4) Alignment Mark on Camshaft
(5) Alignment Mark on Retainer

3. Tighten twenty bolts in numerical order on each bank as shown in the illustration.

Torque: 10 N·m (1.0 kg·m/89 lb in)

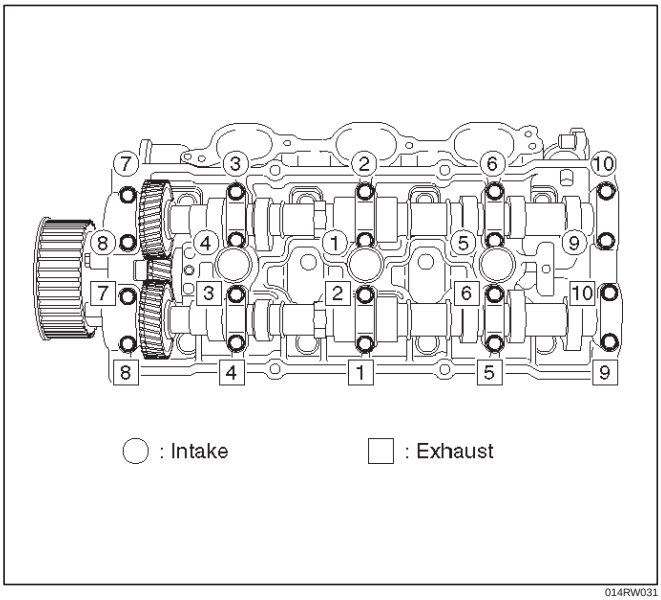

014RW031

5. Tighten bolt for camshaft drive gear assembly pulley to the specified torque.

Torque: 98 N·m (10.0 kg·m/72 lb ft)

Valve Spring, Oil Controller, Valve, Valve Guide

Valve Spring, Oil Controller, Valve, Valve Guide and Associated Parts

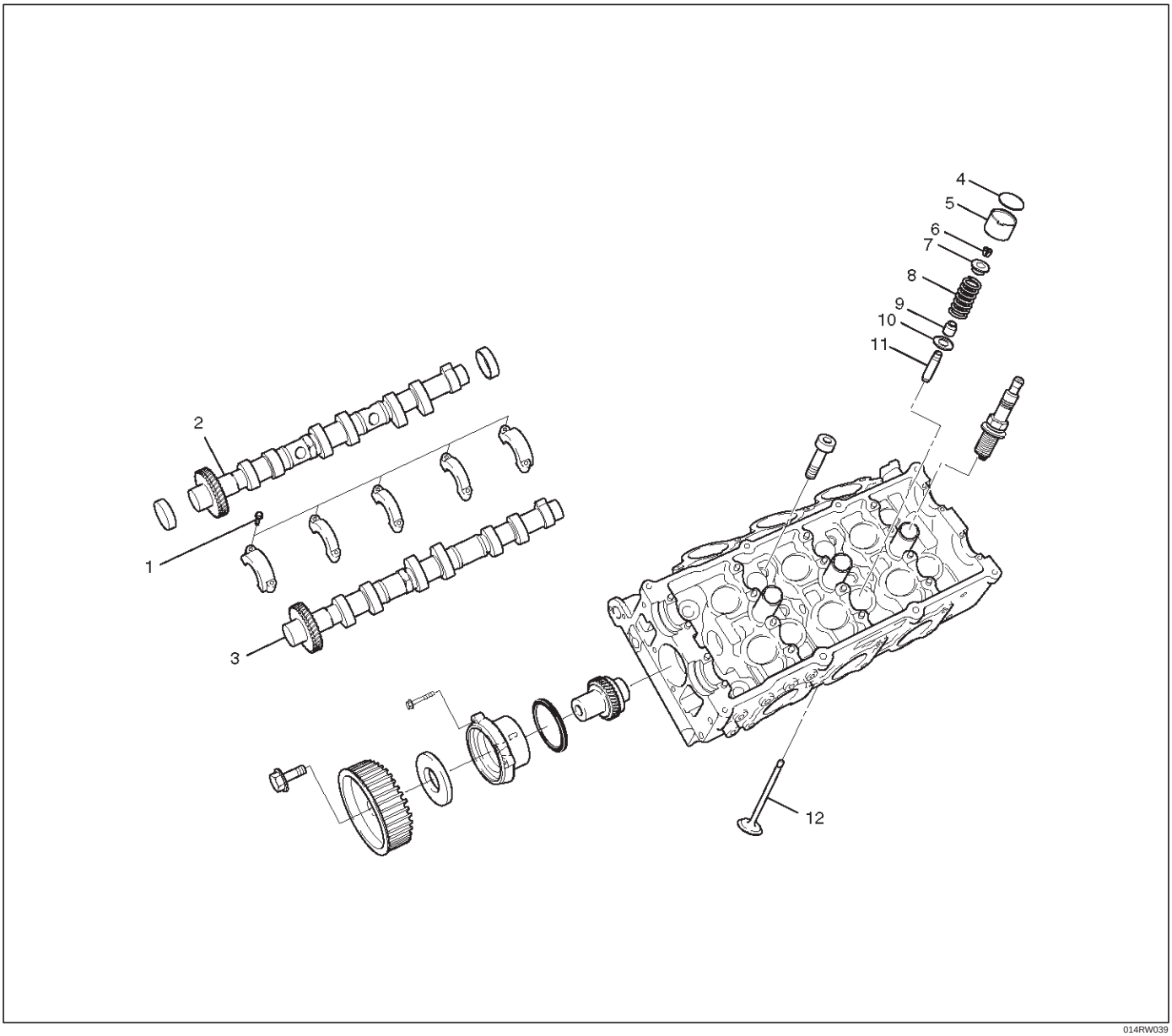

Legend

(1) Camshaft Bracket Fixing Bolts
(2) Camshaft Assembly Inlet
(3) Camshaft Assembly Exhaust
(4) Shim
(5) Tappet
(6) Split Collar
(7) Spring Upper Seat
(8) Valve Spring
(9) Oil Controller
(10) Spring Lower Seat
(11) Valve Guide
(12) Valve

Disassembly

1. Remove camshaft bracket fixing bolts (1).
2. Remove camshaft assembly (intake).
3. Remove camshaft assembly (Exhaust side).
4. Remove shim (4) and tappet (5).

5. Use the 5–8840–2446–0 valve spring compressor and 5–8840–2547–0 valve spring compressor adapter to remove split collar.

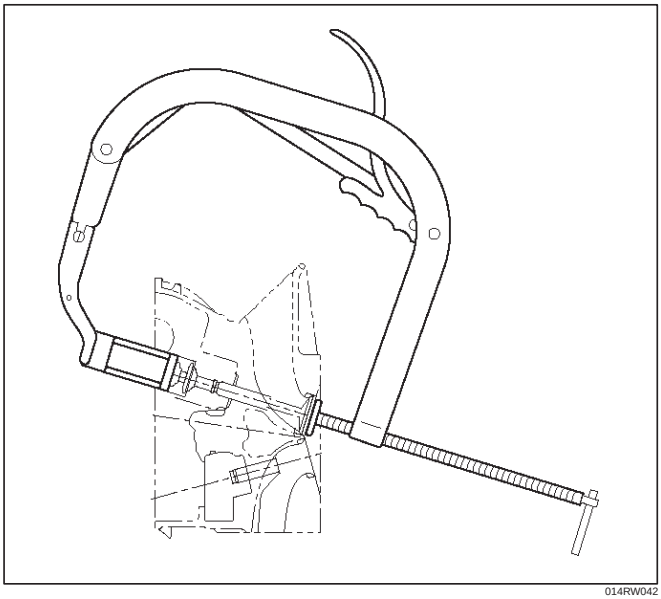

014RW042

6. Remove valve spring.
7. Remove valve.
8. Remove oil controller and spring lower seat.
9. Remove the valve guide using the 5–8840–2442–0 valve guide replacer.

Inspection and Repair

Valve Spring

CAUTION: Visually inspect the valve springs and replace them if damage or abnormal wear is evident.

1. Measure the free height of the springs. The springs must be replaced if the free height is below the specified limit.

Standard : 44.6 mm (1.756 in)

Limit : 43.6 mm (1.717 in)

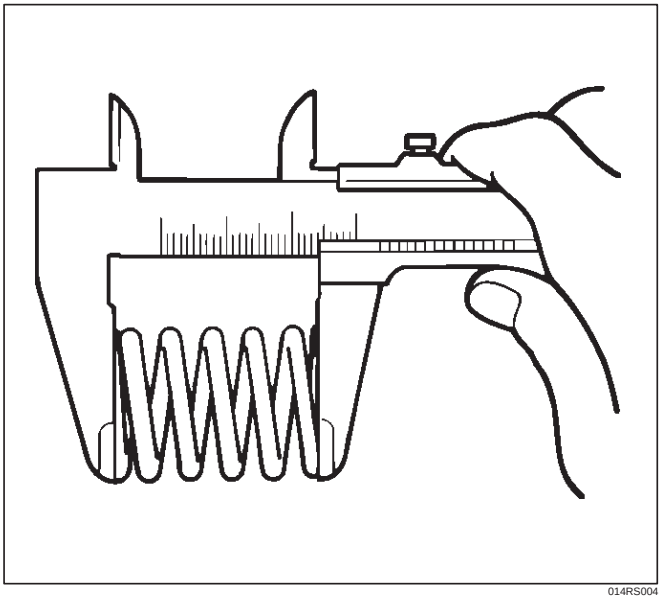

014RS004

2. Measure the valve spring squareness with a steel square and replace the valve springs if the measured value exceeds the specified limit.

Limit : 2 mm (0.079 in)

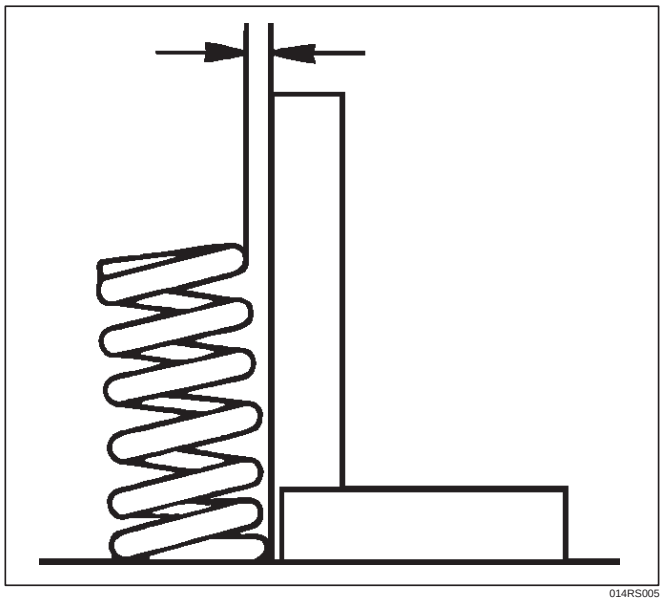

014RS005

3. Using a spring tester to compress the springs to the installed height, measure the compressed spring tension, and replace the springs if the measured tension is below the specified limit.

At installed height: 35.0 mm (1.38 in)

Standard: 196 N (44 lb)

Limit: Less than 181 N (41 lb)

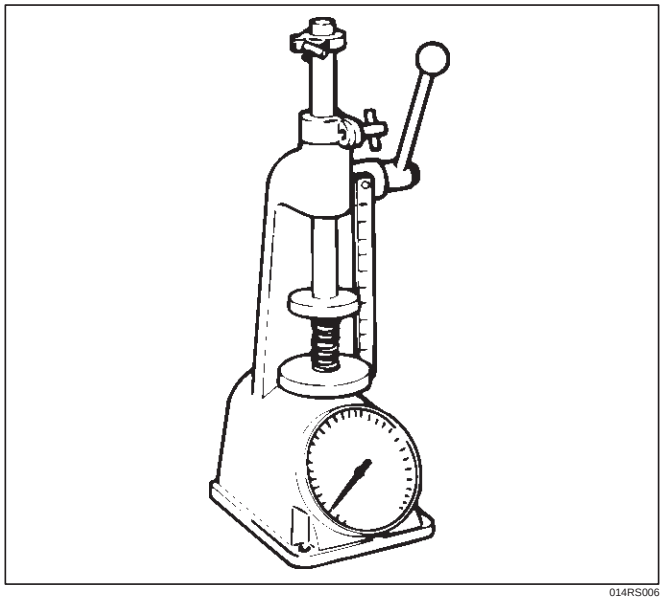

014RS006

Valve Guide

CAUTION: Take care not to damage the valve seat contact surface, when removing carbon adhering to the valve head. Carefully inspect the valve stem for scratchs or abnormal wear. If these conditions are present, the valve and the valve guide must be replaced as a set.

1. Measure the valve stem diameter with a micrometer. If the valve stem diameter is less than the specified limit, the valve and the valve guide must be replaced as a set.

Diameter of Valve Stem

Intake

Standard : 5.977 mm–5.959 mm (0.2353 in–0.2346 in)

Limit : 5.90 mm (0.2323 in)

Exhaust

Standard : 5.952 mm–5.970 mm (0.2343 in–0.2350 in)

Limit : 5.90 mm (0.2323 in)

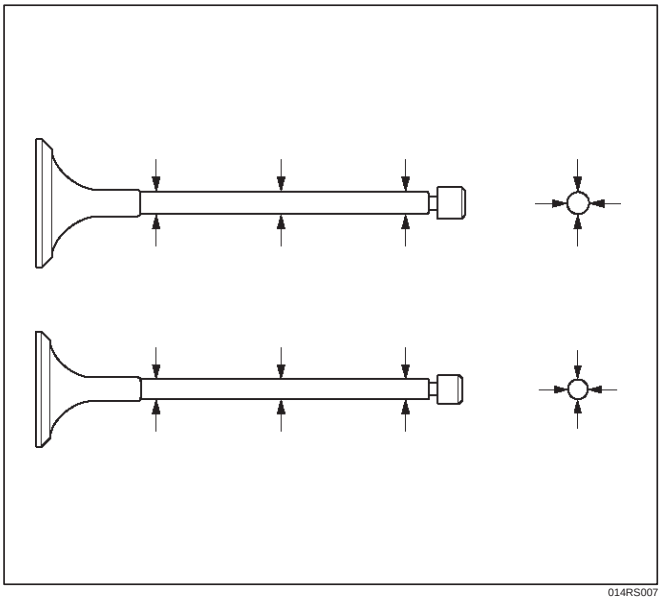

014RS007

2. Measure the inside diameter of the valve guide with a micrometer. Subtract the measured outer diameter of the valve stem from the measured inner diameter of the valve guide. If the value exceeds the specified limit, the valve and the valve guide must be replaced as a set.

Inside Diameter of the Vale Guide

Inlet clearance

Standard : 0.023 mm–0.056 mm (0.0009 in–0.0002 in)

Limit : 0.20 mm (0.00787 in)

Exhaust clearance

Standard : 0.030 mm–0.063 mm (0.0012 in–0.0025 in)

Limit : 0.20 mm (0.00787 in)

Valve Guide Replacement

1. Using Valve guide replacer: 5–8840–2442–0, drive out the valve guide from the combustion chamber side.

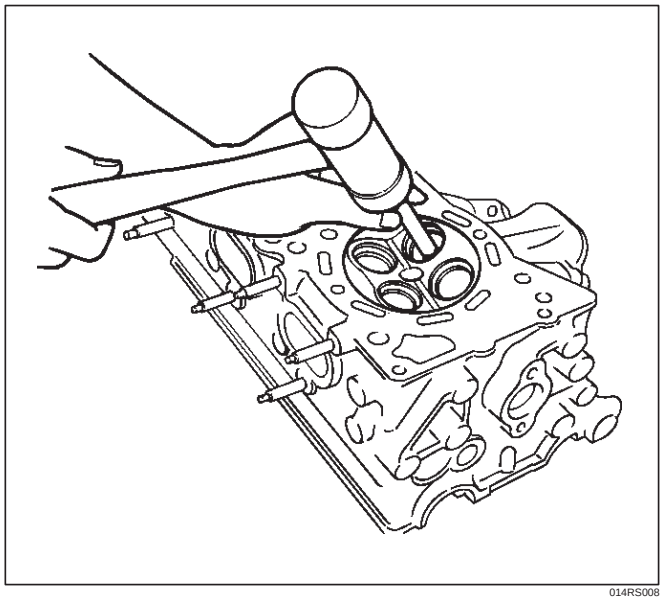

014RS008

2. Apply engine oil to the outside of the valve guide. Using valve guide replacer 5–8840–2442–0, drive in a new valve guide from the camshaft side, and check the valve guide height.

Valve guide upper end height: 13.0 mm (0.5118 in)

(Measured from the cylinder head upper face)

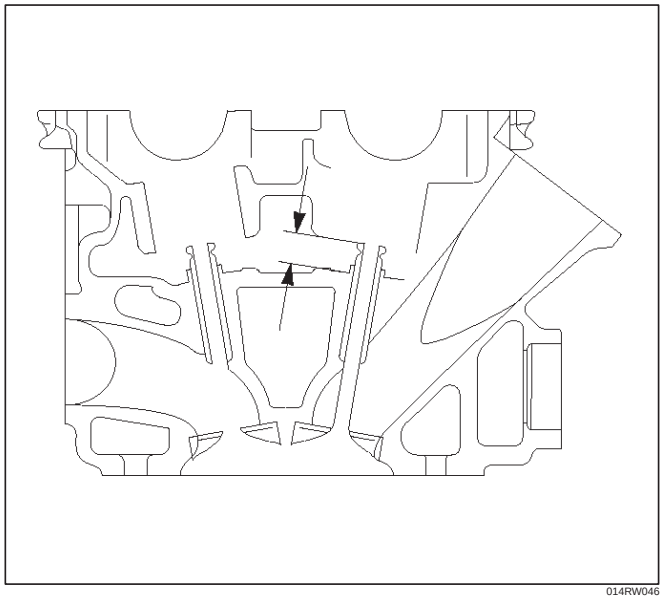

014RW046

3. Check the clearance. If the clearance is less than the specified value, ream the inside diameter of valve guide. Using a sharp 6 mm reamer, ream the valve guide to obtain the specified clearance.

Valve Seat

1. Measure the protrusion of the valve stem when a new valve is installed in the cylinder head. If the protrusion of the valve stem exceeds the limit, replace the valve seat insert or the cylinder head assembly.

Protrusion of valve stem

Intake

Standard: 39.32 mm (1.5480 in)

Limit: 39.47 mm (1.5539 in)

Exhaust

Standard: 39.3 mm (1.5472 in)

Limit: 39.45 mm (1.5531 in)

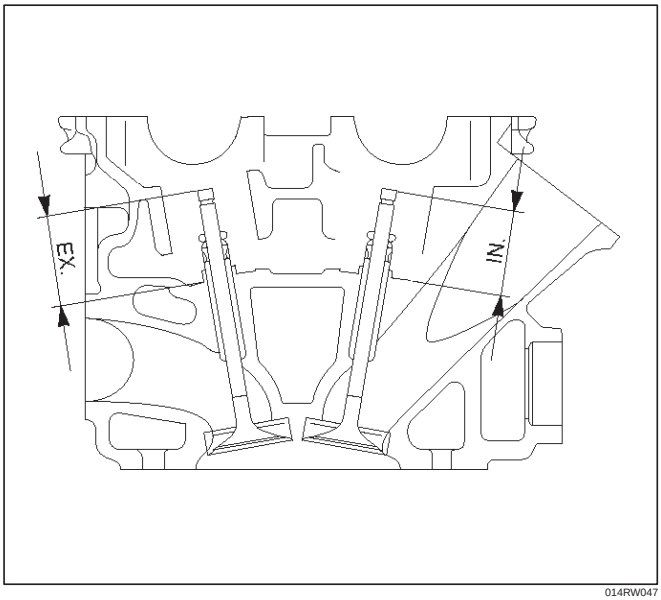

014RW047

2. Measure the valve seat contact width. Make the necessary corrections if the seat contact surface is damaged or rough or if the contact width wear exceeds the limit.

Valve seat contact width

Standard: 1.1 mm (0.0433 in)

Limit: 1.7 mm (0.0669 in)

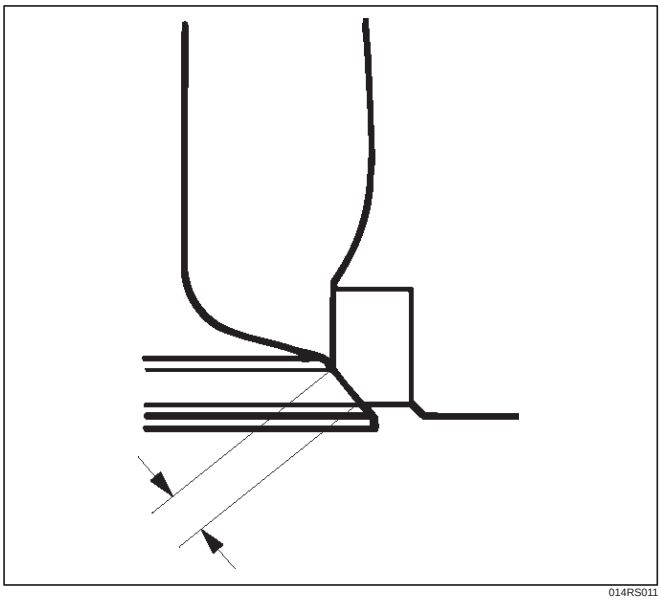

014RS011

Contact Surface Angle on Valve Seat on Valve

1. Measure contact surface angle on valve seat.
2. If the measured value exceeds the limit, replace valve, valve guide and valve seat as a set.

Valve contact surface angle: 45˚

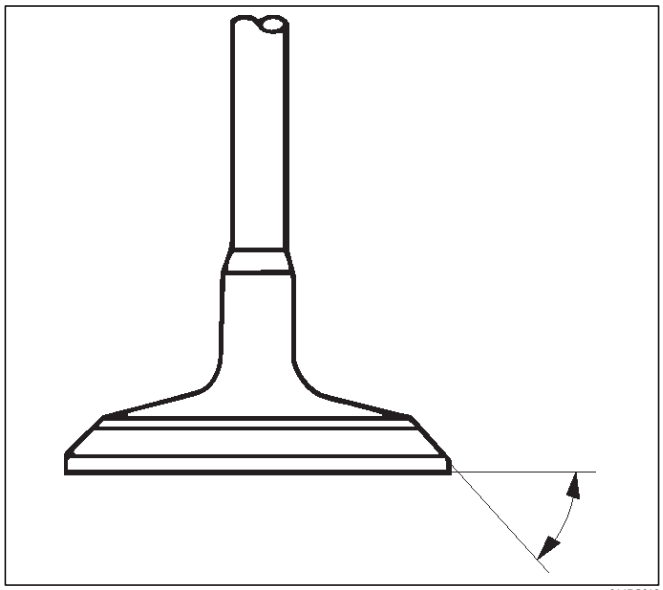

014RS012

Valve Seat Insert Correction

1. Remove the carbon from the valve seat insert surface.
2. Use a valve cutter to minimize scratches and other rough areas. This will bring the contact width back to the standard value. Remove only the scratches and rough areas. Do not cut away too much. Take care not to cut away unblemished areas of the valve seat surface.

Valve seat angle degree: 90˚

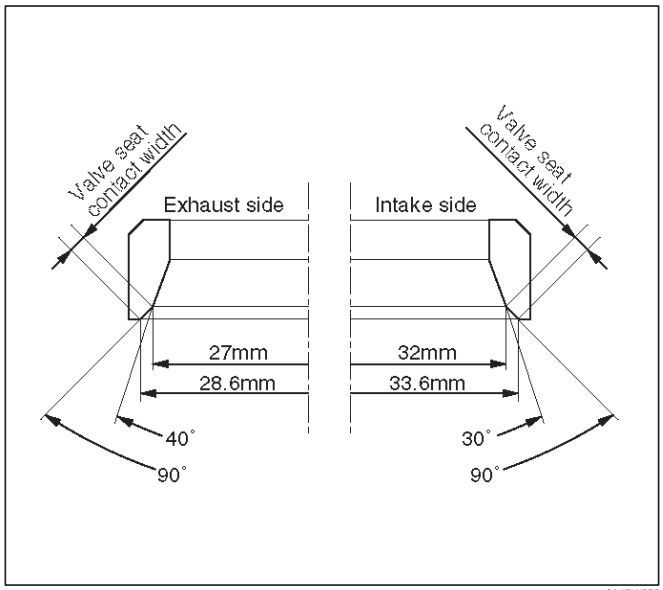

014RW059

3. Apply abrasive compound to the valve seat insert surface.
4. Insert the valve into the valve guide.
5. Turn the valve while lapping it to fit the valve seat insert.
6. Check that the valve contact width is correct.
7. Check that the valve seat insert surface is in contact with the entire circumference of the valve.

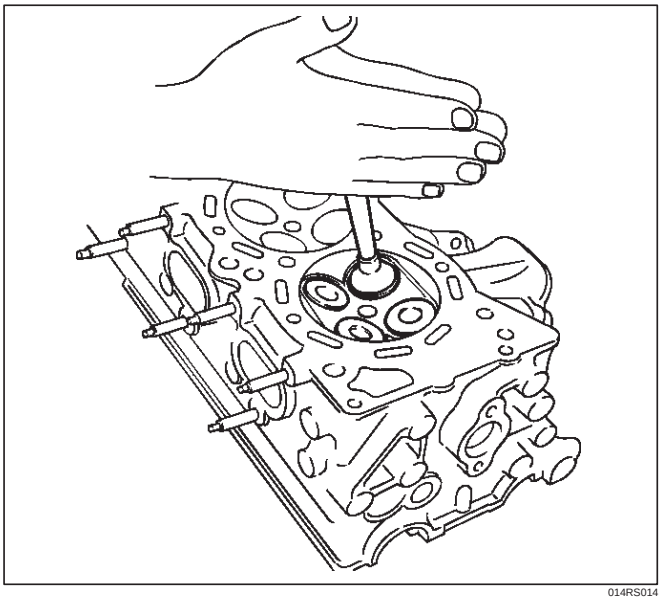

014RS014

Valve Seat Insert Replacement

1. Arc weld the rod at several points. Be careful not to damage the aluminum section.
2. Allow the rod to cool for a few minutes. This will cause the valve seat to shrink.
3. Strike the rod and pull it out.

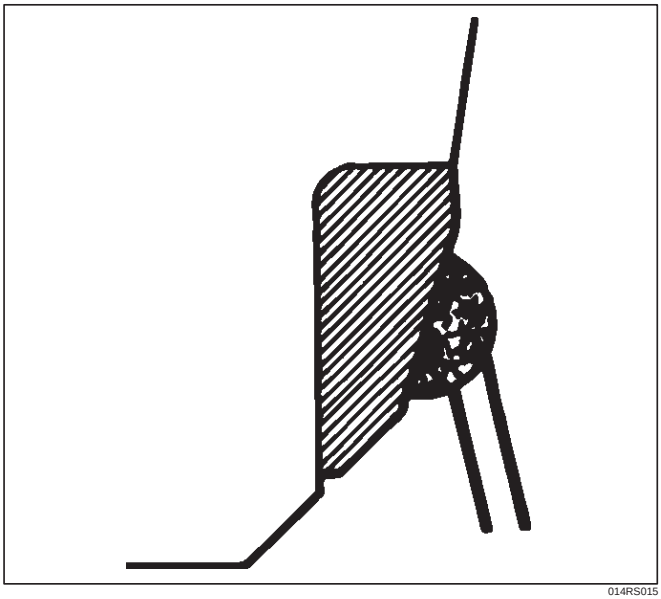

014RS015

4. Carefully clean the valve seat press–fit section on the cylinder head side.
5. Heat the press–fit section with steam or some other means to cause expansion. Cool the valve seat with dry ice or some other means.
6. Insert the press–fit section into the valve seat horizontally.

Standard fitting interference: 0.14 mm–0.09 mm (0.0055 in–0.0035 in)

7. After insertion, use a seat grinder to grind finish the seating face. Carefully note the seating angle, the contact width, and the depression.
8. Lap the valve and the seat.

Reassembly

1. Install valve guide (1) to cylinder head. Apply engine oil to the outside of the valve guide. Using valve guide replacer 5–8840–2442–0, drive in a new valve guide from the camshaft side.
2. Install oil controller (3) and spring lower seat (2). Using oil controller replacer 5–8840–0623–0, drive in a new oil controller.

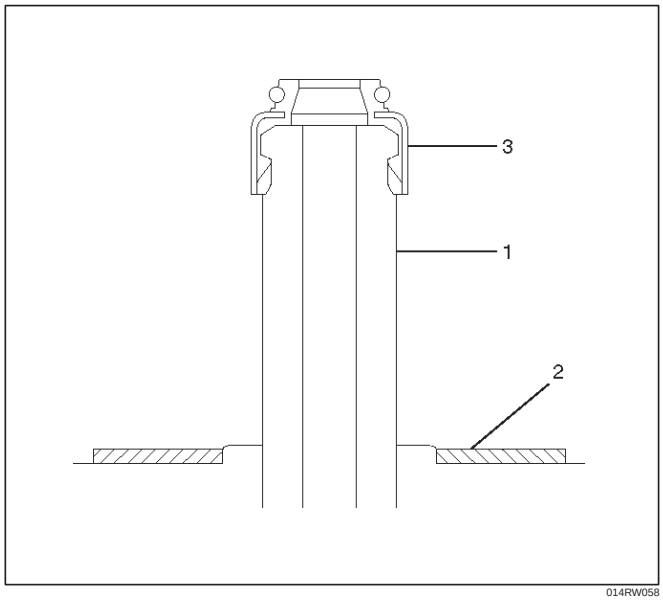

014RW058

3. Install valve to valve guide. Before install valve guide apply engine oil to the outside of the valve stem.
4. Install valve spring to cylinder head. Attach the valve spring to the lower spring seat. The painted area of the valve spring should be facing downward.

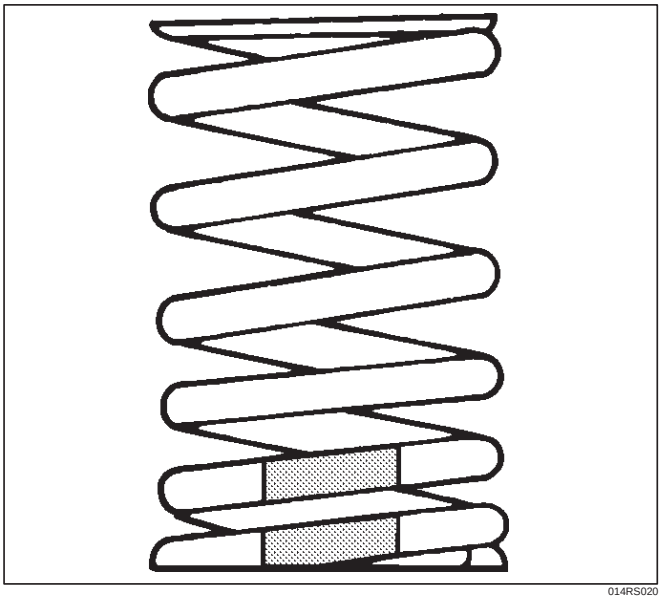

014RS020

5. Install lower valve spring seat, valve spring and upper valve spring seat then put split collars on the upper spring seat, using the 5–8840–2446–0 valve spring compresor and 5–8840–2547–0 valve spring compressor adapter to install the split collars.

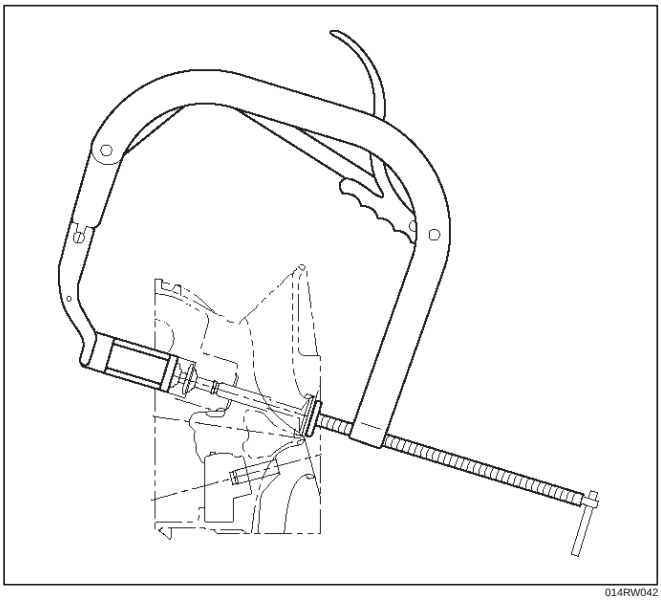

014RW042

6. Install tappet with shim.
7. Install camshaft assembly.
   - Refer to installation procedure for Camshaft in this manual.

Valve Clearance Adjustments

NOTE: To adjust valve clearance, apply engine oil to the cam as well as to the adjusting shim (2) with the cylinder head built on the cylinder block, give a few turns to the camshaft by means of timing pulley tightening bolt, and measure valve clearance when the nose of cam is just opposite to maximum cam lift (1) as shown in illustration below.

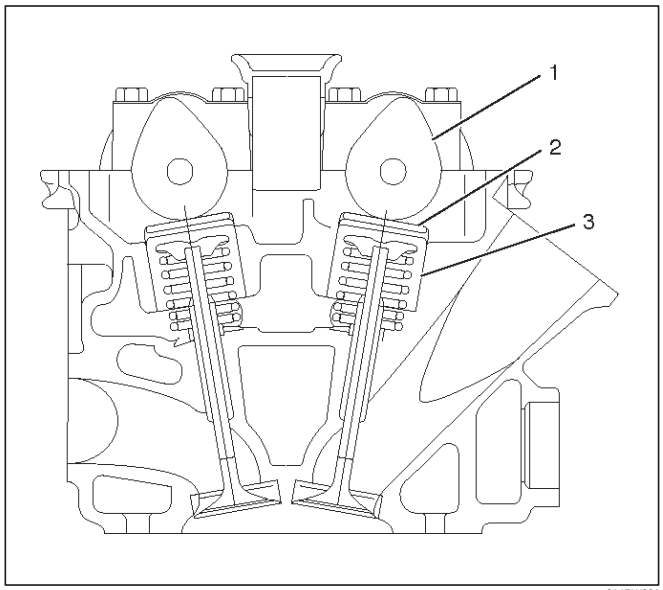

014RW081

Legend

(1) Cam
(2) Shim
(3) Tappet

Valve Clearance Standard Value (cold)

Intake: 0.23 mm–0.33 mm (0.0091 in–0.0130 in)

Exhaust: 0.25 mm–0.35 mm (0.0098 in–0.0138 in)

Selection of Adjusting Shim

Shim to be selected = (Thickness of removed shim) + (Valve clearance measurement – Standard valu)
Based on the above formula, the best suited shim should be selected from 41 sorts of shim (differently thick at 0.02mm (0.0008 in) intervals from 2.40mm (0.0945 in) through 3.2mm (0.1260 in) thick). Install the shim and check valve clearance.

Replacement of Shim

Let the cam push down the edge of tappet by using 5–8840–2444–0 valve clearance adjusting tool and push out the shim with a flat blade screw driver as shown in illustrations below.

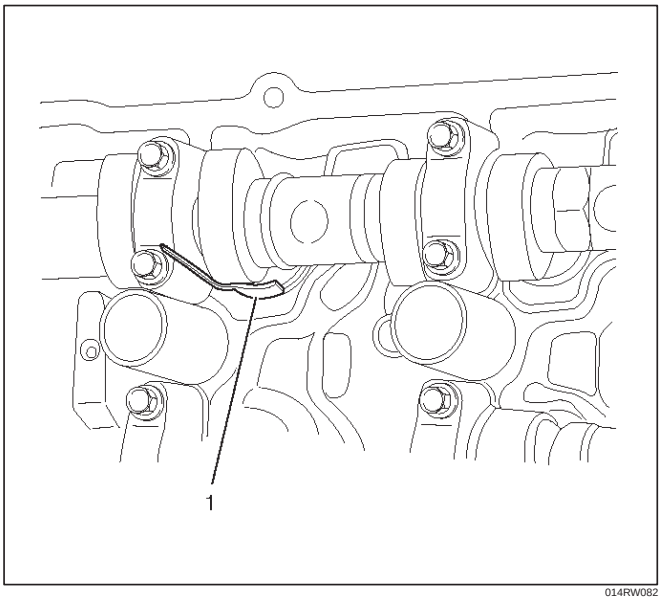

014RW082

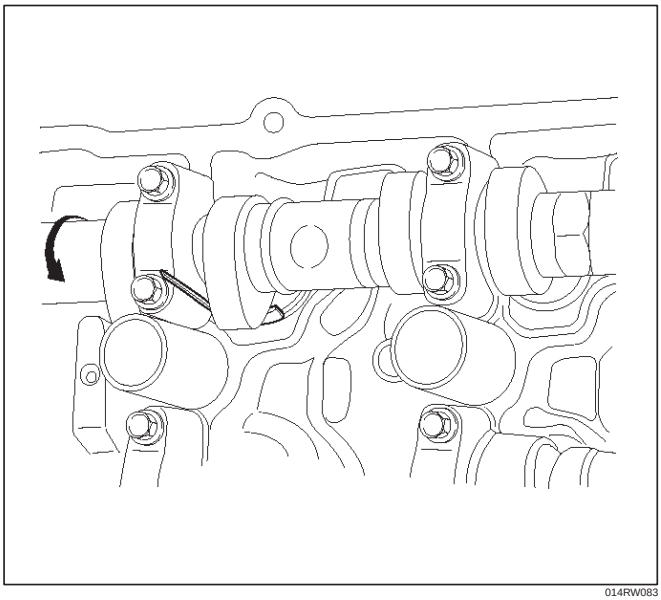

014RW083

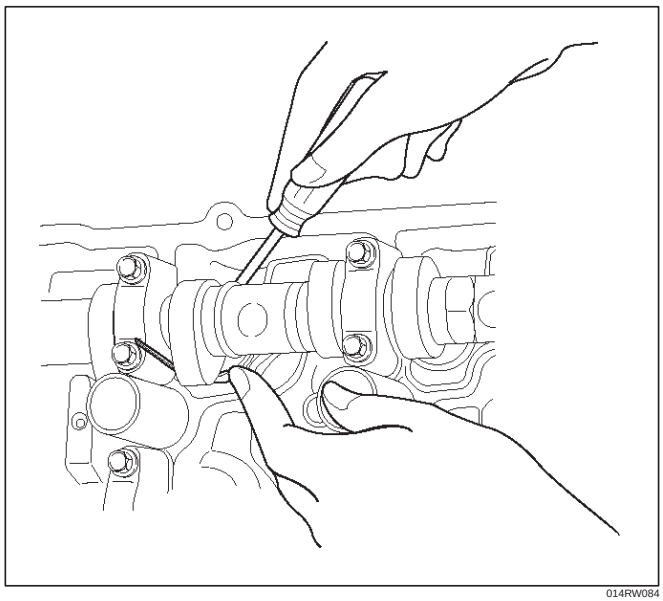

014RW084

Camshaft

Camshaft and Associated Parts

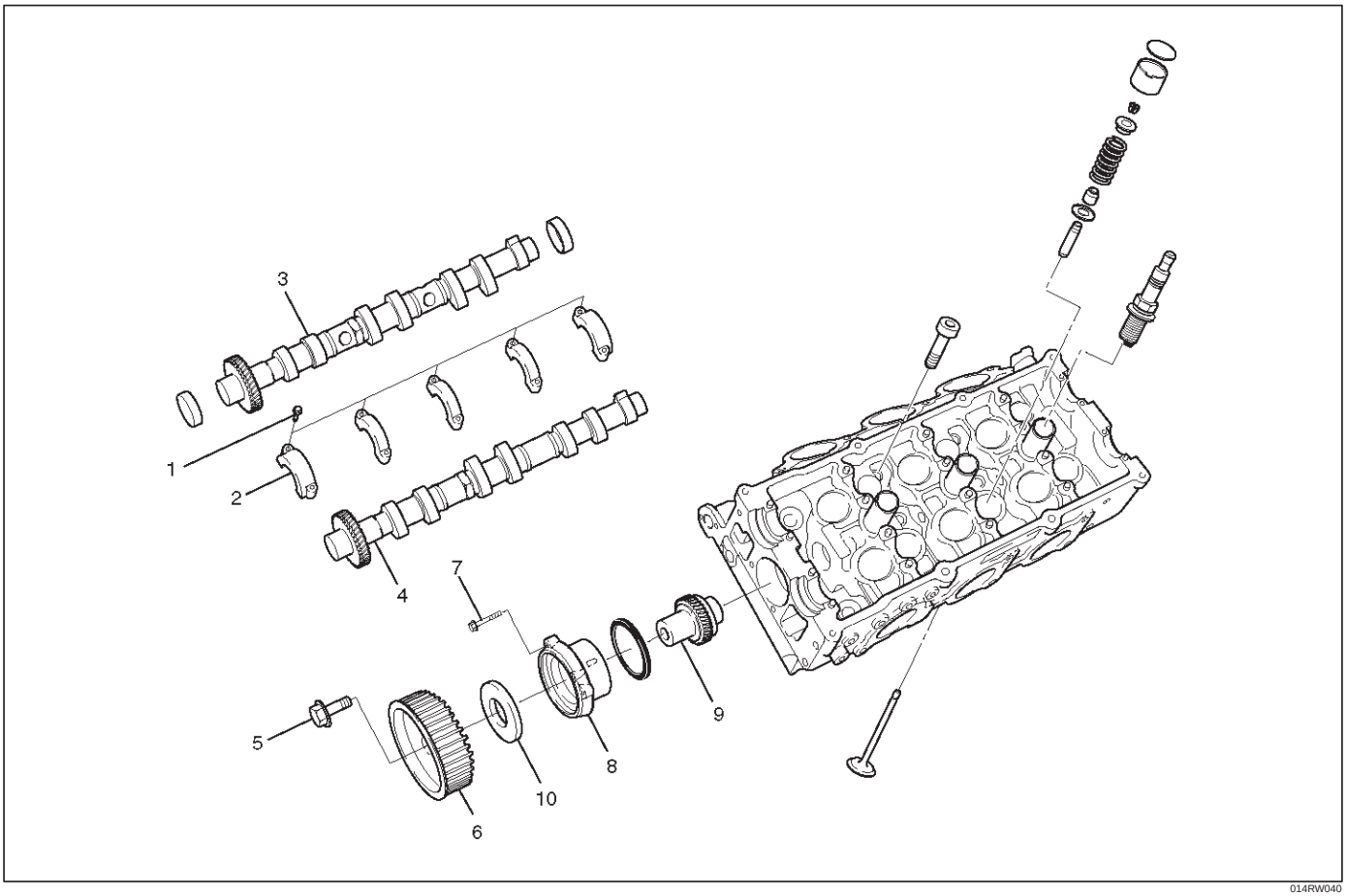

014RW040

Legend

(1) Camshaft Bracket Fixing Bolt
(2) Camshaft Bracket
(3) Camshaft Assembly Intake
(4) Camshaft Assembly Exhaust
(5) Pulley Fixing Bolt
(6) Camshaft Drive Gear Pulley
(7) Retainer Fixing Bolt
(8) Retainer
(9) Camshaft Drive Gear
(10) Oil Seal

Disassembly

1. Remove fixing bolt (5) for camshaft drive gear pulley using 5–8840–2447–0 universal holder.

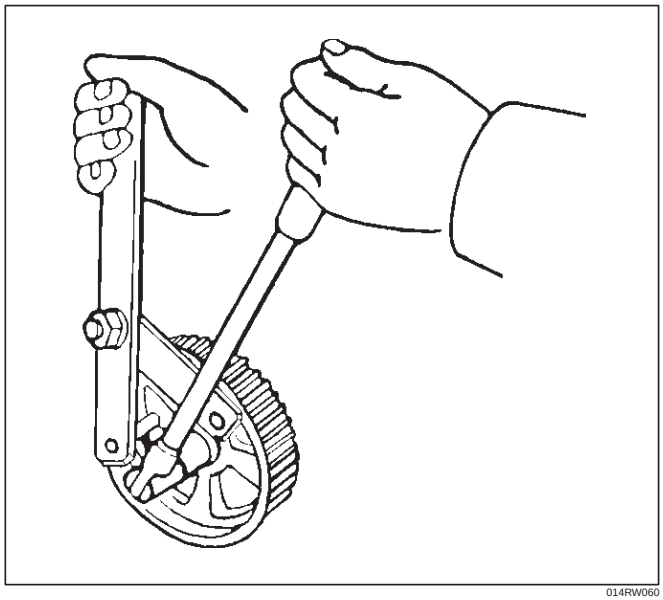

014RW060

2. Remove twenty fixing bolts from inlet and exhaust camshaft bracket on one side bank, then camshaft brackets (2).

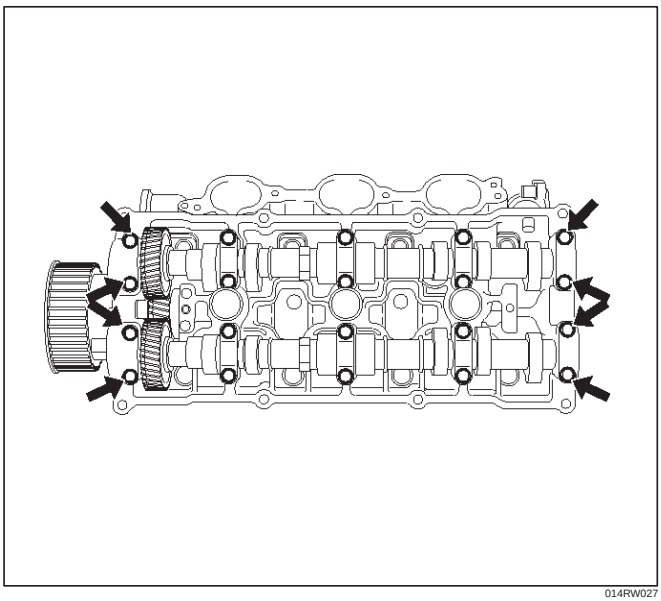

014RW027

3. Remove camshaft assembly (3), (4).
4. Remove three fixing bolts (7) from camshaft drive gear retainer (8), then camshaft drive gear assembly.

Inspection and Repair

1. Use a micrometer to measure the cam lobe height and uneven wear. Replace the camshaft if either the lobe height or the uneven wear exceeds the specified limit.

Lobe height : 44.709 mm (1.7602 in)

Uneven wear : 0.05 mm (0.0020 in)

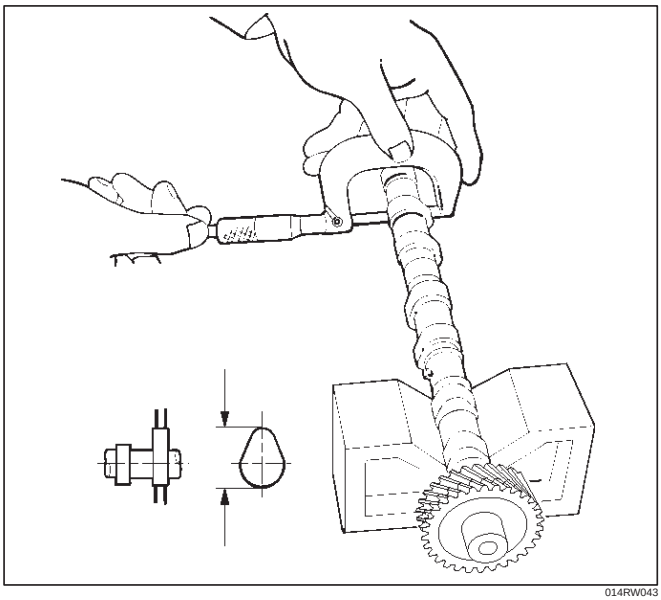

014RW043

2. Use a micrometer to measure the diameter and the uneven wear of the camshaft journals.

Replace the camshaft if the diameter or the uneven wear exceeds the specified limit.

Journal Diameter

Standard : 25.972 mm–25.993 mm (1.0225 in–1.0233 in)

Limit : 25.8 mm (1.0157 in)

Uneven wear : 0.05 mm (0.0020 in)

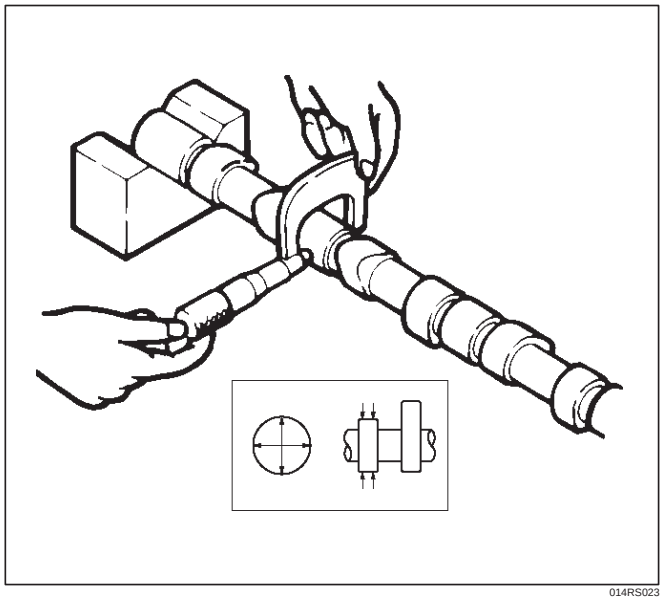

014RS023

3. Place the camshaft on V–blocks.

Slowly rotate the camshaft and measure the runout with a dial indicator.

Replace the camshaft if the runout exceeds the specified limit.

Run out

Limit : 0.1 mm (0.0039 in)

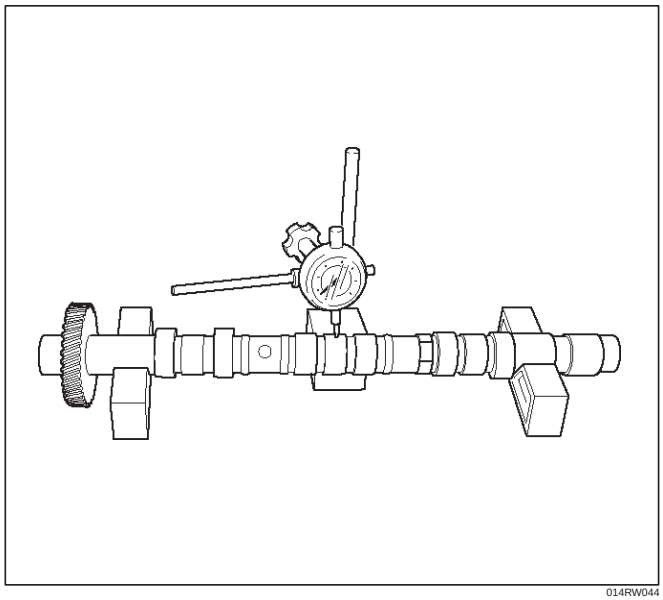

014RW044

4. Measure the camshaft journal oil clearance.
   1. Measure the camshaft bracket housing inside diameter.

NOTE: Tighten camshaft bracket (2) to specified torque before measuring the camshaft bracket inside diameter.

Torque : 10 N·m (1.0 kg·m/89 lb in)

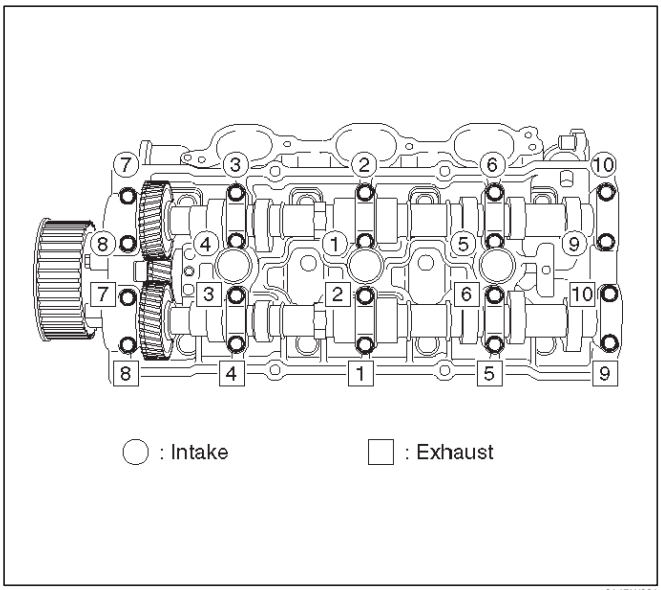

014RW031

   2. Subtract the camshaft outside diameter from the camshaft bracket housing inside diameter.

Oil Clearance

Standard : 0.027 mm–0.078 mm (0.0011 in–0.0031 in)

Limit : 0.11 mm (0.0043 in)

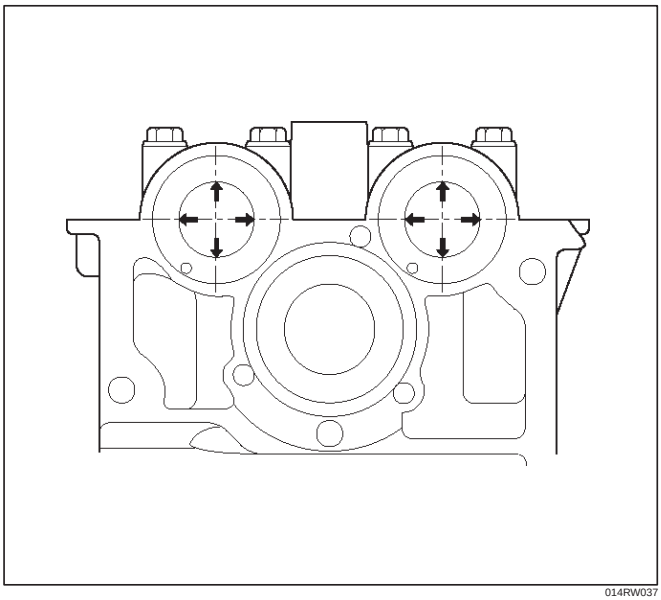

014RW037

5. Replace the cylinder head and/or camshaft if the measured oil clearance exceeds the specified limit.
   1. Carefully clean the camshaft journal, the camshaft bracket, and the cylinder head.
   2. Install camshaft assembly and camshaft brackets (2), tighten twenty bolts (1) on one side bank to the specified torque.

Torque: 10 N·m (1.0 kg·m/89 lb in)

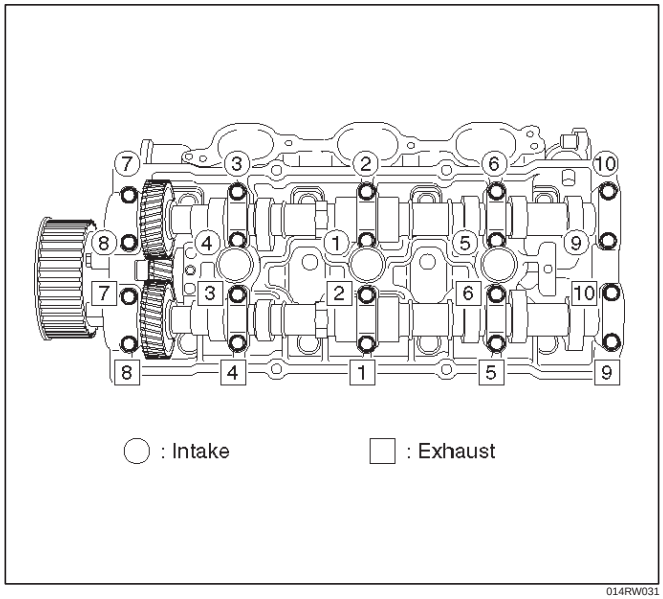

014RW031

   3. Measure the camshaft thrust clearance with a dial indicator. Replace the camshaft and/or the cylinder head if the camshaft thrust clearance exceeds the specified limit.

Camshaft thrust Clearance

Standard : 0.03 mm–0.08 mm (0.0012 in.–0.0031 in.)

Limit : 0.12 mm (0.0047 mm)

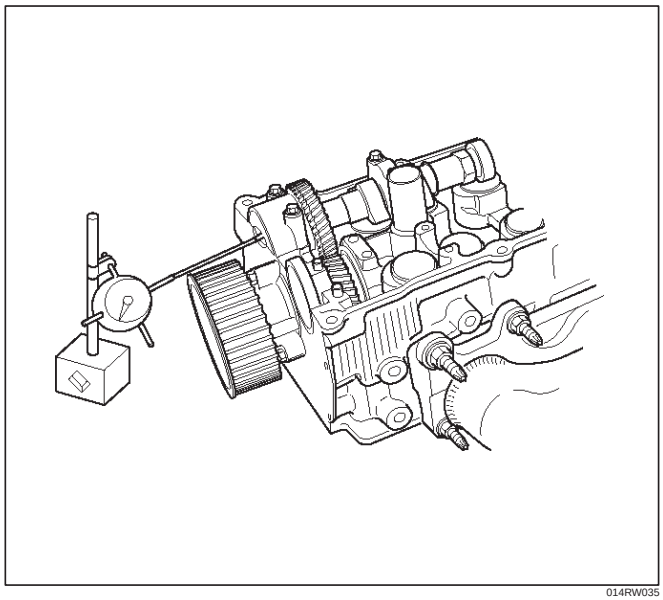

014RW035

Reassembly

1. Install camshaft drive gear assembly and tighten three bolts to specified torque.

   Torque: 10 N·m (1.0 kg·m/89 lb in)

2. Tighten sub gear setting bolt.
   1. Use 5–8840–2443–0 to turn sub gear to right direction until the M5 bolt hole aligns between camshaft driven gear and sub gear.
   2. Tighten M5 bolt suitable torque for prevent moving the sub gear.

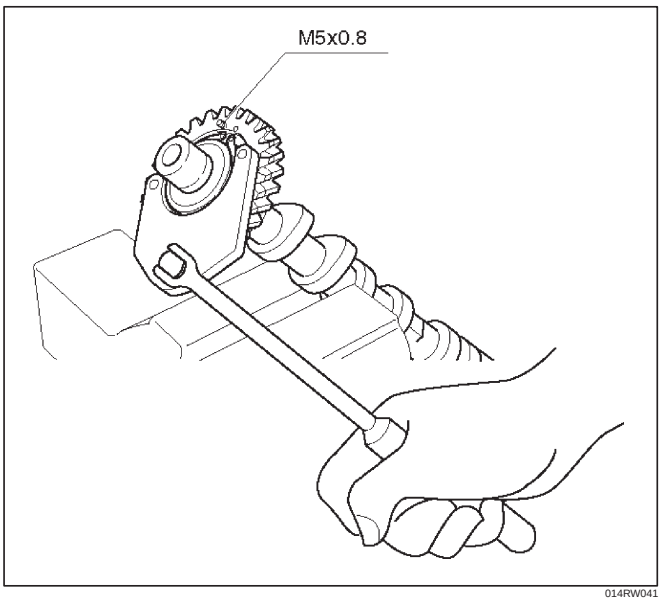

014RW041

3. Install camshaft assembly and camshaft brackets, tighten twenty bolts on one side bank to the specified torque.
   1. Apply engine oil to camshaft journal and bearing surface of camshaft bracket.
   2. Align timing mark on intake camshaft (one dot for right bank, two dots for left bank) and exhaust camshaft (one dot for right bank, two dots for left bank) to timing mark on camshaft drive gear (one dot).

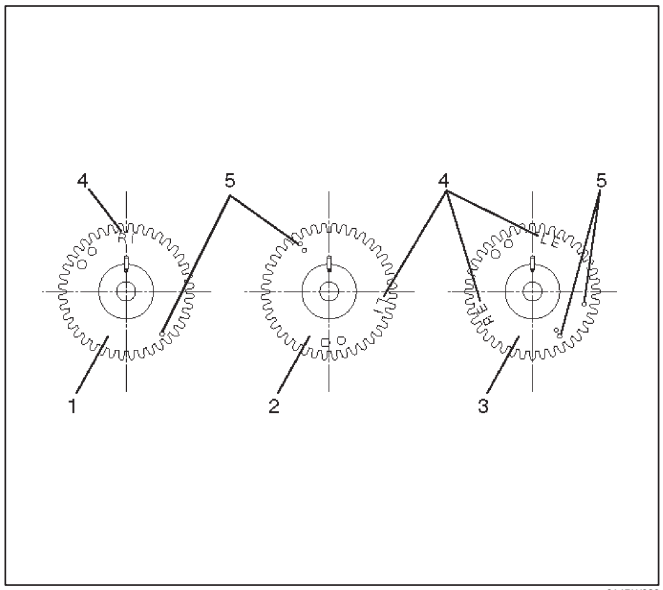

014RW020

Legend

(1) Intake Camshaft Timing Gear for Right Bank
(2) Intake Camshaft Timing Gear for Left Bank
(3) Exhaust Camshaft Timing Gear
(4) Discerning Mark
LI: Left Bank Intake
RI: Right Bank Intake
LE: Left Bank Exhaust
RE: Right Bank Exhaust

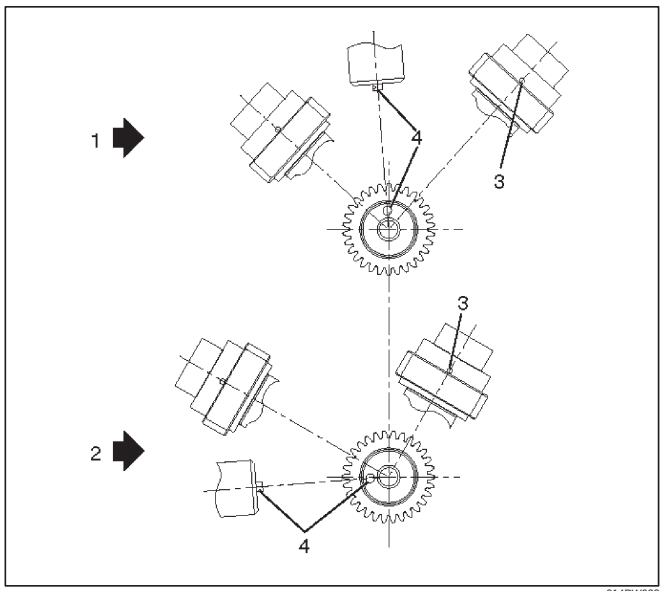

014RW023

Legend

(1) Right Bank Camshaft Drive Gear
(2) Left Bank Camshaft Drive Gear
(3) Timing Mark on Drive Gear
(4) Dowel Pin

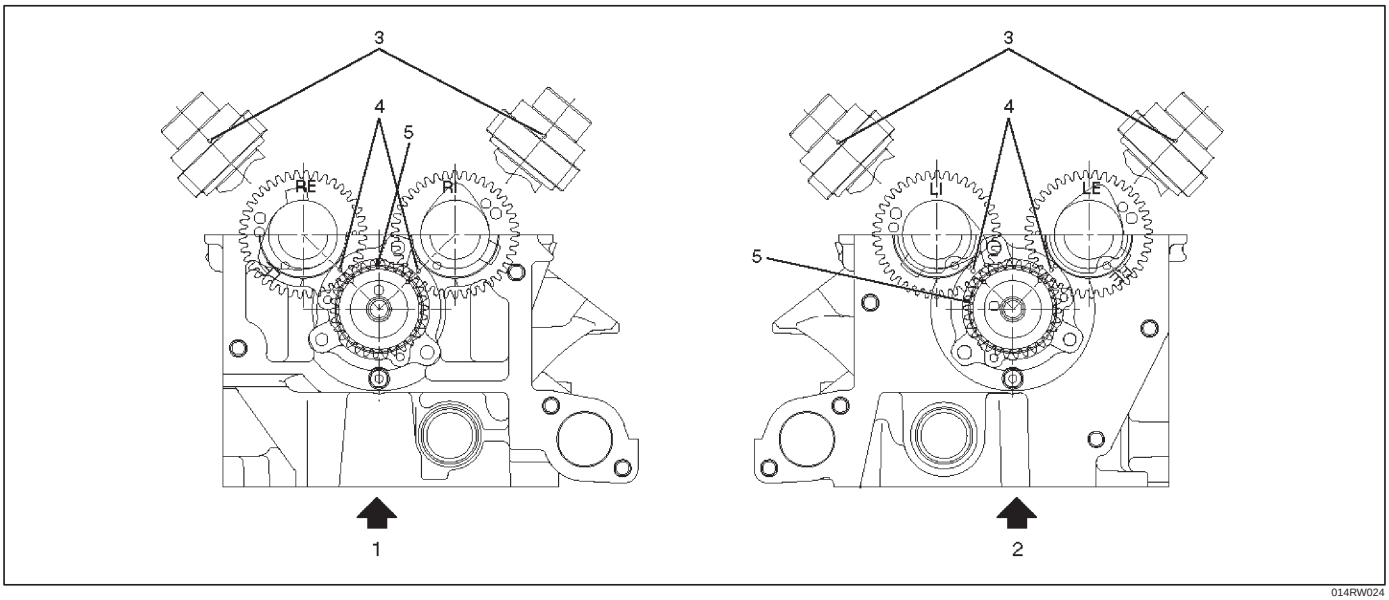

014RW024

Legend

(1) Right Bank
(2) Left Bank
(3) Alignment Mark on Camshaft Drive Gear
(4) Alignment Mark on Camshaft
(5) Alignment Mark on Retainer

3. Tighten twenty bolts in numerical order on one side bank as shown in the illustration.

Torque: 10 N·m (1.0 kg·m/89 lb in)

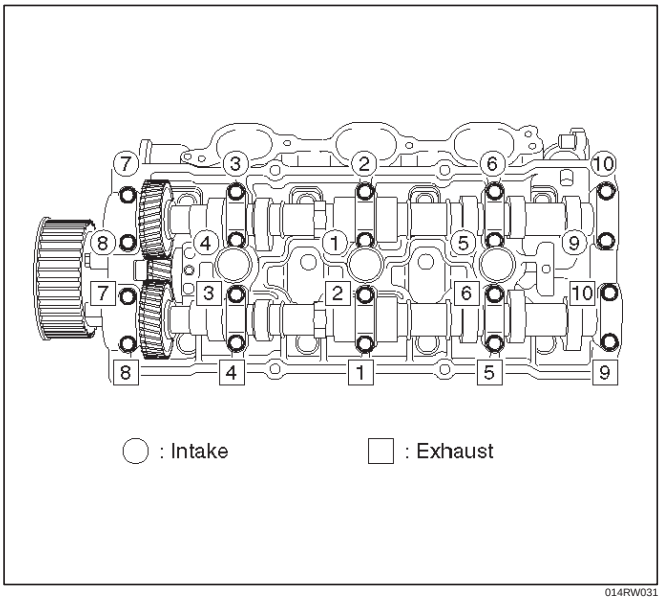

014RW031

4. If the oil seal requires replacement, use the 5–8840–2445–0 to install the oil seal.

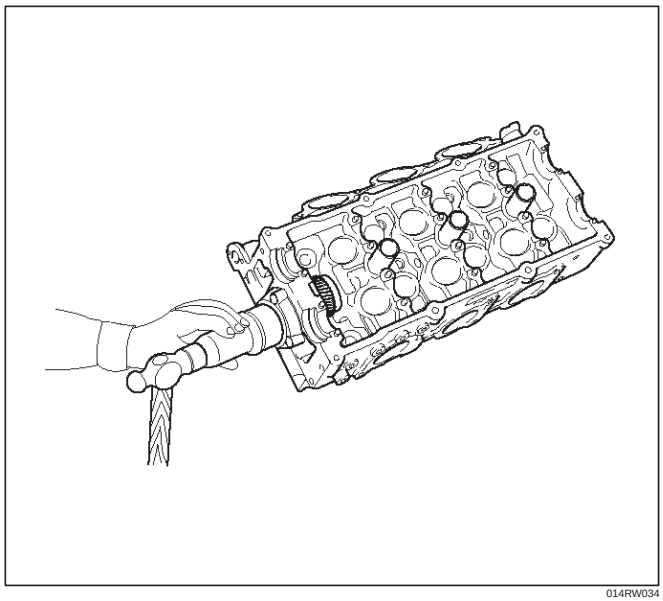

014RW034

5. Tighten bolt for camshaft drive gear assembly pulley to the specified torque using the 5–8840–2447–0 universal holder.

Torque: 98 N·m (10.0 kg·m/72 lb ft)

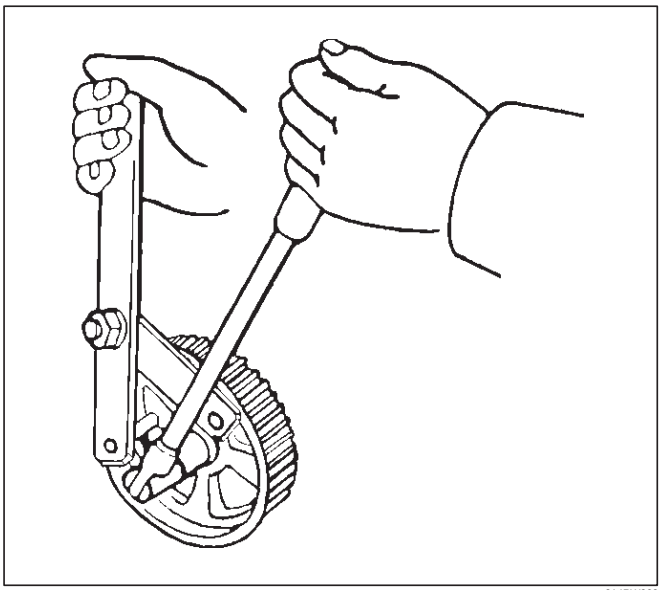

014RW060

Crankshaft

Crankshaft and Associated Parts

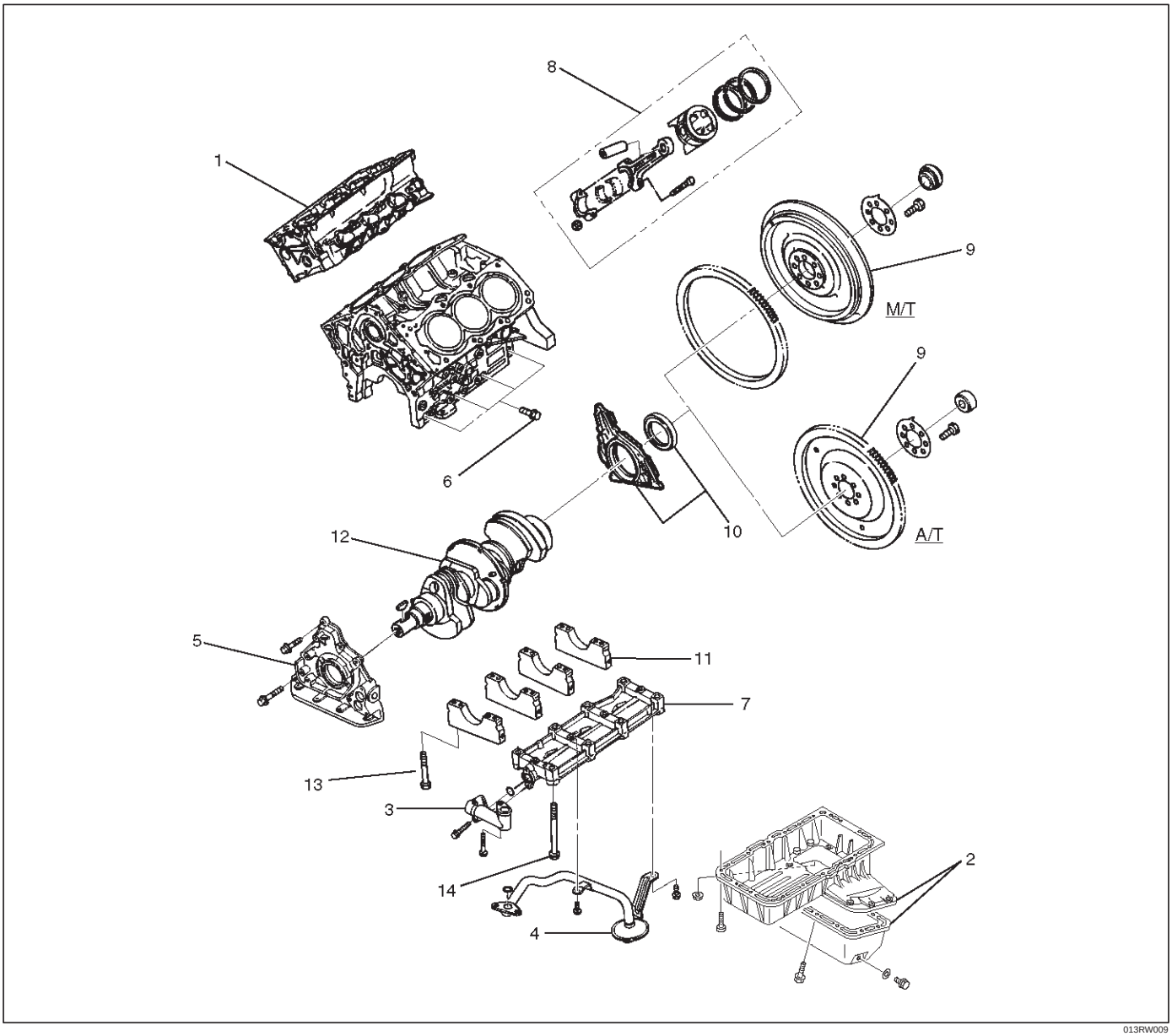

013RW009

Legend

(1) Cylinder Head Assembly
(2) Crankcase with Oil Pan
(3) Oil Pipe and O-Ring
(4) Oil Strainer and O-Ring
(5) Oil Pump Assembly
(6) Cylinder Block Side Bolts
(7) Oil Gallery
(8) Piston and Connecting Rod Assembly
(9) Flywheel
(10) Rear Oil Seal Retainer and Oil Seal
(11) Main Bearing Cap
(12) Crankshaft
(13) Main Bearing Cap Fixing Bolts
(14) Oil Gallery Fixing Bolts

Disassembly

1. Remove cylinder head assembly (1). Refer to “Cylinder Head” in this manual.
2. Remove crankcase with oil pan (2). Refer to “Oil Pan and Crankcase” in this manual.

CAUTION: Take care not to damage or deform the sealing flange surface of crankcase.

3. Remove oil pipe and O-ring (3).
4. Remove oil strainer and O-ring (4).
5. Remove oil pump assembly (5).
6. Remove crankcase side bolts (6).

7. Remove oil gallery (7).
8. Remove piston and connecting rod assembly (8). Refer to “Piston, Piston Ring and Connecting Rod” in this manual.
9. Remove flywheel (9).
10. Remove rear oil seal retainer (10).
11. Remove main bearing cap (11).
12. Remove crankshaft (12).

Inspection and Repair

1. Crankshaft
   Set the dial indicator as shown in the illustration and measure the crankshaft thrust clearance. If the thrust clearance exceeds the specified limit, replace the thrust bearings as a set.

   Thrust Clearance

   Standard : 0.06 mm–0.24 mm (0.0024 in–0.0094 in)

   Limit : 0.30 mm (0.0118 in)

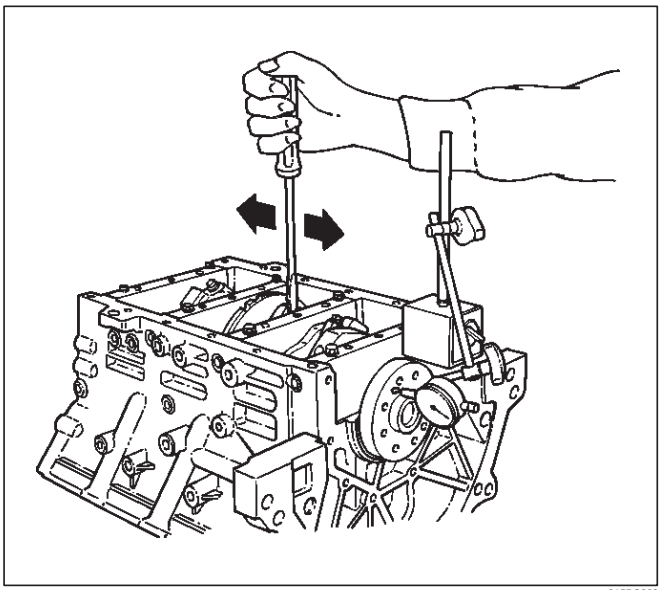

015RS003

Main Bearing Clearance

1. Remove the bearing caps and measure the oil clearance.
2. Remove the main bearing cap fixing bolts in the sequence shown in the illustration.
   Arrange the removed main bearing caps in the cylinder number order.
   Remove the main bearings.

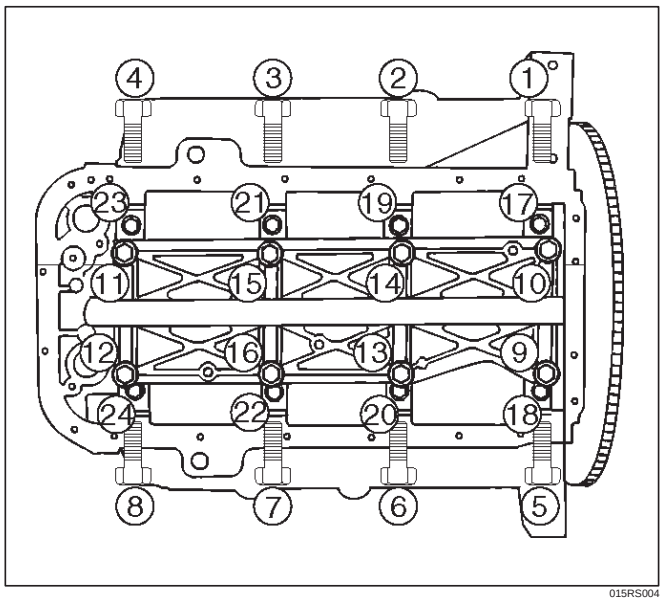

015RS004

3. Remove the crankshaft.
   Remove the main bearings.
4. Clean the upper and lower bearings as well as the crankshaft main journal.
5. Check the bearings for damage or excessive wear.
   The bearings must be replaced as a set if damage or excessive wear is discovered during inspection.
6. Set the upper bearings and the thrust washers to their original positions.
   Carefully install the crankshaft.
7. Set the lower bearings to the bearing cap original position.
8. Apply plastigage to the crankshaft journal unit as shown in the illustration.

NOTE: Do not set the plastigage on the oil hole.

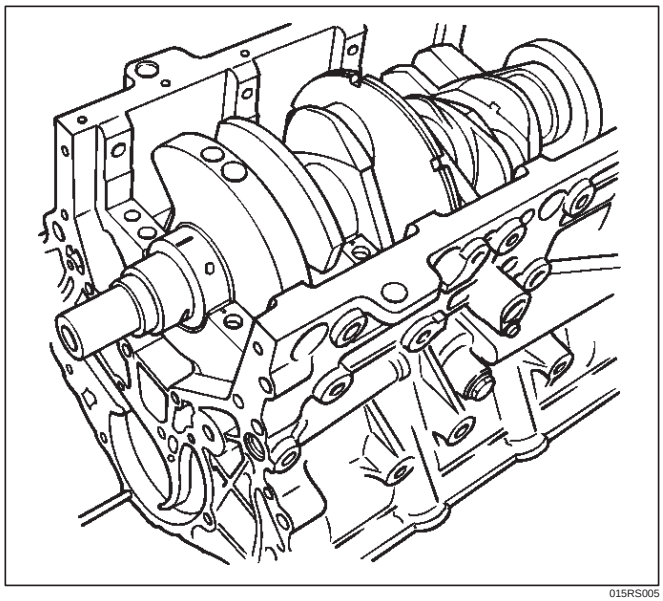

015RS005

9. Install main bearing caps, oil gallery and crank case bolts in the order shown, and tighten each bolt to the specified torque.

NOTE: Do not apply engine oil to the crank case side bolts.

Main bearing cap bolts.

Torque: 39 N·m (4.0 Kg·m/29 lb ft)

Oil gallery fixing bolts.

Torque:

1st step: 29 N·m (3.0 Kg·m/21 lb ft)

2nd step 55°~ 65°

Crank case side bolts

Torque : 39 N·m (4.0 Kg·m/29 lb ft)

NOTE: Do not allow the crankshaft to rotate.

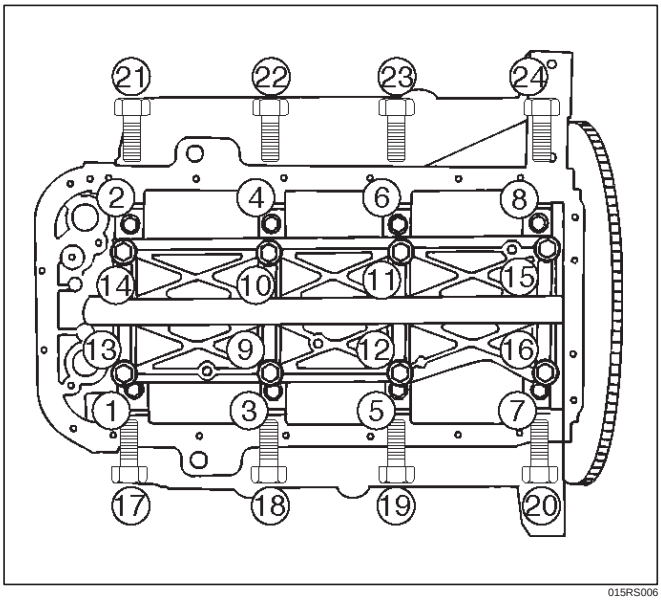

015RS006

10. Remove the main bearing caps in the sequence shown in the illustration.

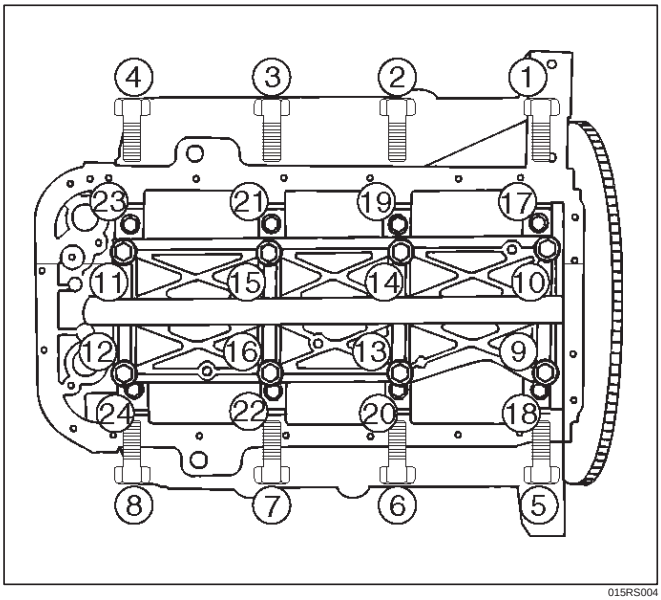

015RS004

11. Measure the plastigage width and determine the oil clearance. If the oil clearance exceeds the specified limit, replace the main bearings as a set and/or replace the crankshaft.

Standard : 0.019 mm–0.043 mm (0.0007 in–0.0017 in)

Limit : 0.08 mm (0.0031 in)

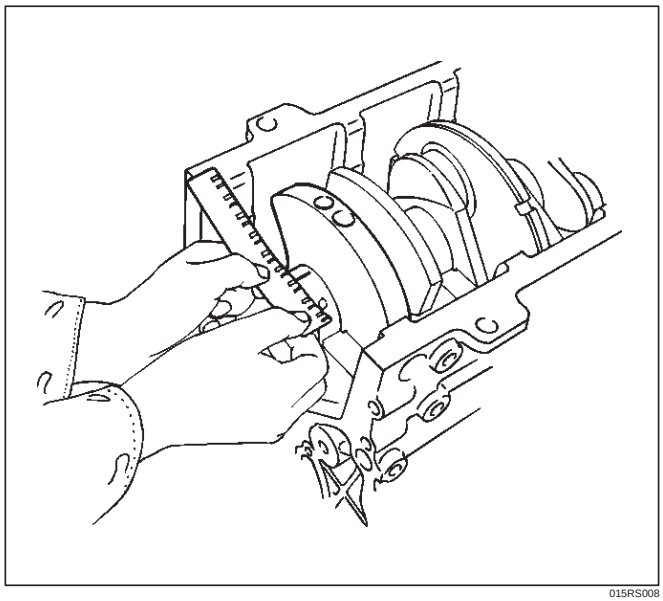

015RS008

12. Clean the plastigage from the bearings and the crankshaft.
    Remove the crankshaft and the bearings.

Crankshaft (12) Inspection

Inspect the surface of the crankshaft journal and crank pins for excessive wear and damage. Inspect the oil seal fitting surfaces for excessive wear and damage. Inspect the oil ports for obstructions.

Inspection and Repair

1. Carefully set the crankshaft on the V–blocks. Slowly rotate the crankshaft and measure the runout. If the crankshaft runout exceeds the specified limit, the crankshaft must be replaced.

Runout : 0.04 mm (0.0016 in)

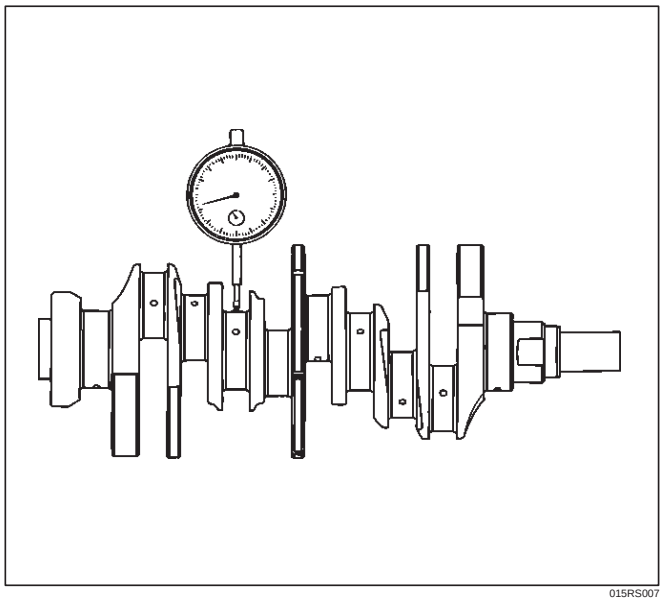

015RS007

2. Measure the diameter and the uneven wear of main journal and crank pin. If the crankshaft wear exceeds the specified limit, crankshaft must be replaced.

Main journal diameter : 63.918 mm–63.933 mm (2.5165 in–2.5170 in)

Crank pin diameter : 53.922 mm–53.937 mm (2.1229 in.–2.1235 in.)

Uneven wear limit : 0.005 mm (0.0002 in)

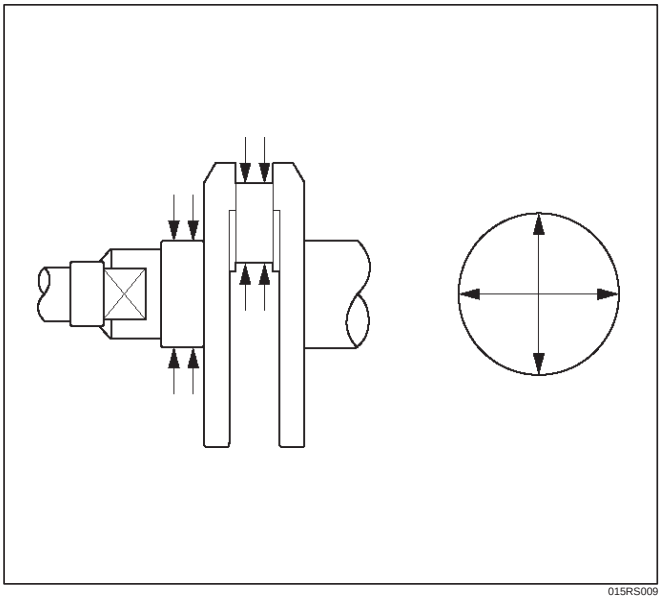

015RS009

Crankshaft Bearing Selection

When installing new crankshaft bearings or replacing bearings, refer to the selection table below. Select and install the new crankshaft bearings, paying close attention to the cylinder block journal hole.

1. Diameter size mark (1) and the crankshaft journal.

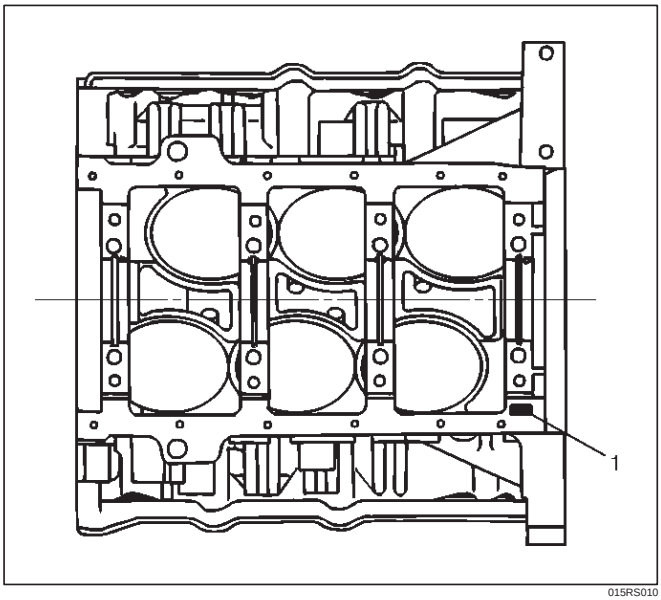

015RS010

2. Diameter size mark (1).
   The diameter size marks are stamped on the No.1 crankshaft balancer as shown in the illustration.

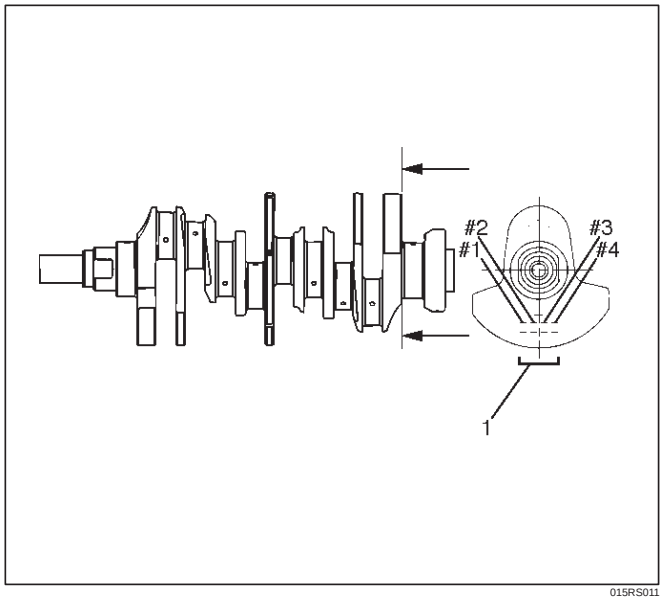

015RS011

NOTE: Take care to ensure the bearings are positioned correctly.

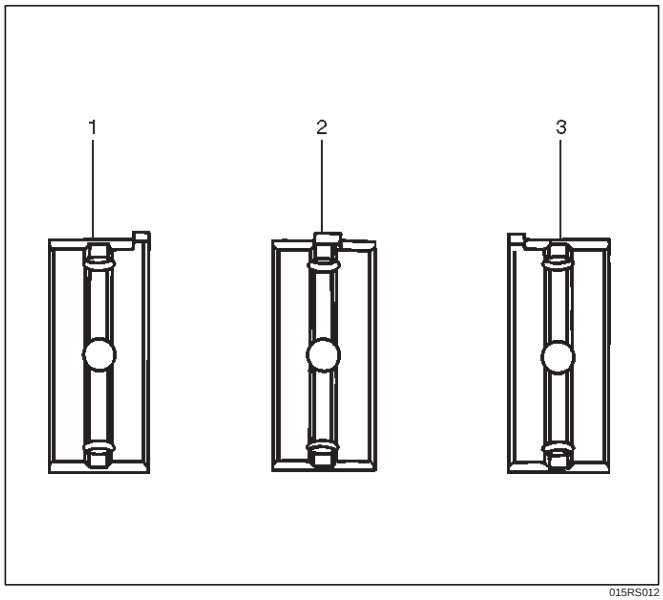

015RS012

Legend

(1) Number 1 and 4 main bearing upper and lower
(2) Number 2 and 3 main bearing upper
(3) Number 2 and 3 main bearing lower

1 Size Mark	Main Bearing Bore Diameter	Crank Shaft Main Journal Diameter	2 Size Mark	Crank Shaft Bearing Size Mark (Upper Side)	Crank Shaft Bearing Size Mark (Lower Side)	Oil Clearance (Reference)
1	68.994-69.000 (2.7163-2.7165)	63.918-63.925 (2.5165-2.5167)	2	Blue	Blue	0.030-0.049 (0.0012-0.0019)
		63.926-63.933 (2.5168-2.5170)	1	Brown	Brown	0.028-0.047 (0.0011-0.0019)
2	68.987-68.993 (2.7160-2.7163)	63.918-63.925 (2.5165-2.5167)	2			0.029-0.048 (0.0011-0.0019)
		63.926-63.933 (2.5168-2.5170)	1	Green	Green	0.027-0.046 (0.0011-0.0018)
3	68.980-68.986 (2.7157-2.7160)	63.918-63.925 (2.5165-2.5167)	2			0.028-0.047 (0.0011-0.0019)
		63.926-63.933 (2.5168-2.5170)	1	Yellow	Yellow	0.026-0.045 (0.0010-0.0018)

Reassembly

1. Crankshaft (12)
   - Install the main bearings to the cylinder block and the main bearing caps.
   - Be sure that they are positioned correctly.
   - Apply new engine oil to the upper and lower main bearing faces.

NOTE: Do not apply engine oil to the main bearing back faces.

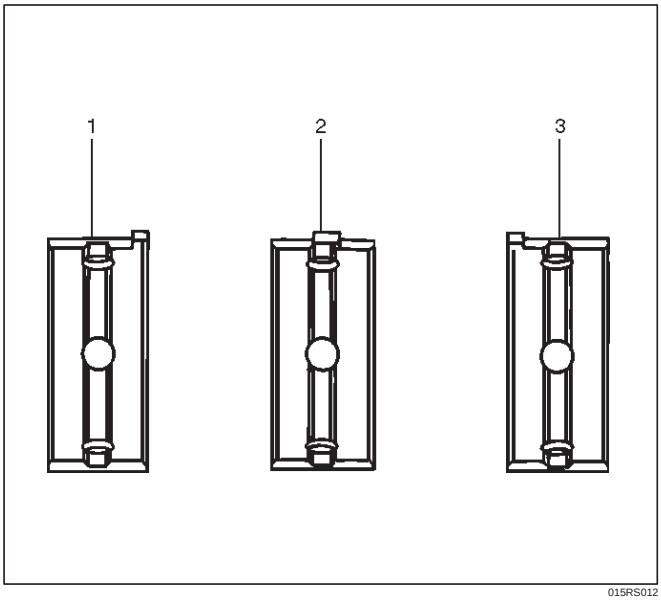

015RS012

- Carefully mount the crankshaft.
- Apply engine oil to the thrust washer.
- Assemble the thrust washer to the No.3 bearing journal. The oil grooves must face the crankshaft.

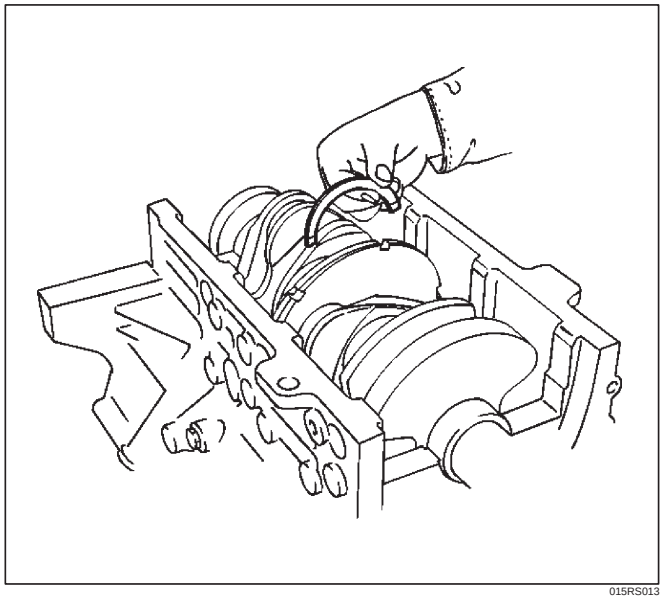

015RS013

2. Rear oil seal (10)
   - Remove the oil from the cylinder block and the retainer mounting surface.
   - Apply sealant (TB–1207B or equivalent) to the retainer mounting surface, following the pattern shown in the illustration.

     The retainer must be installed within 5 minutes after sealant application befor the sealant hardens.

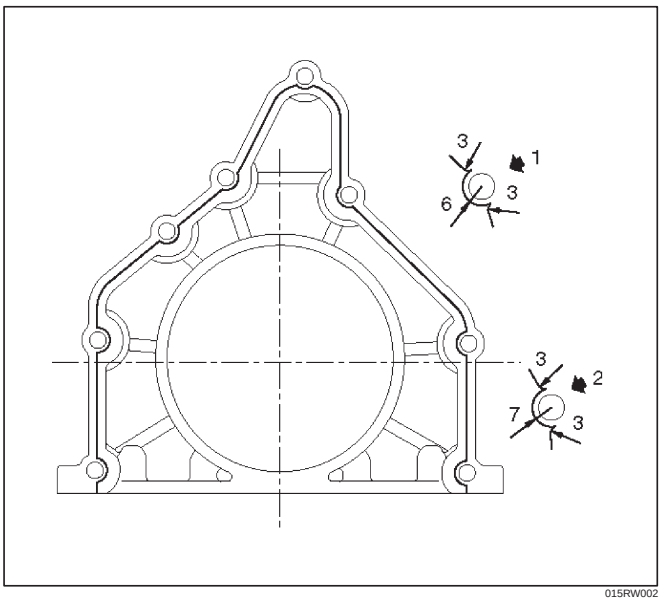

015RW002

Legend

(1) Around Bolt Holes
(2) Around Dowel Pin

- Apply engine oil to the oil seal lip.
- Align the cylinder block dowel pin holes with the rear retainer dowel pins.
- Tighten the rear retainer fixing bolts. New bolts should be used when installing rear retainer.

Torque: 18 N·m (1.8 Kg·m/13 lb ft)

NOTE: Be very careful not to disengage the oil seal garter spring during installation of the rear retainer.

If the seal was removed from retainer for replacement, apply engine oil to the oil seal lip and install the oil seal using 5–8840–2286–0 oil seal installer.

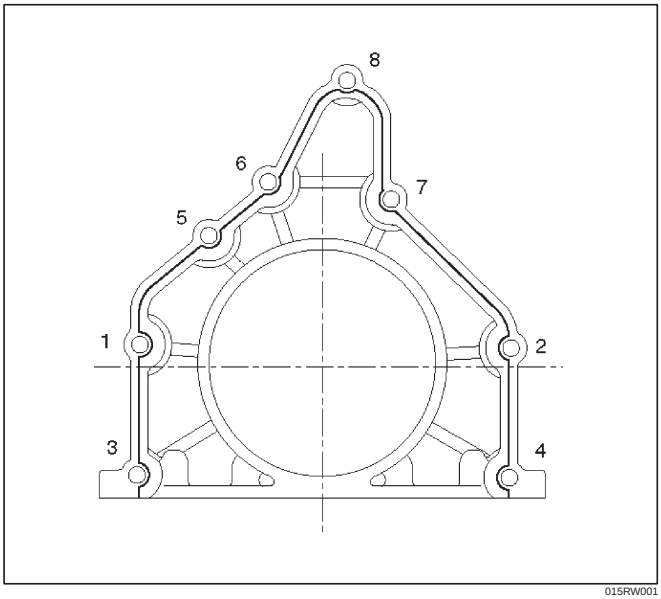

015RW001

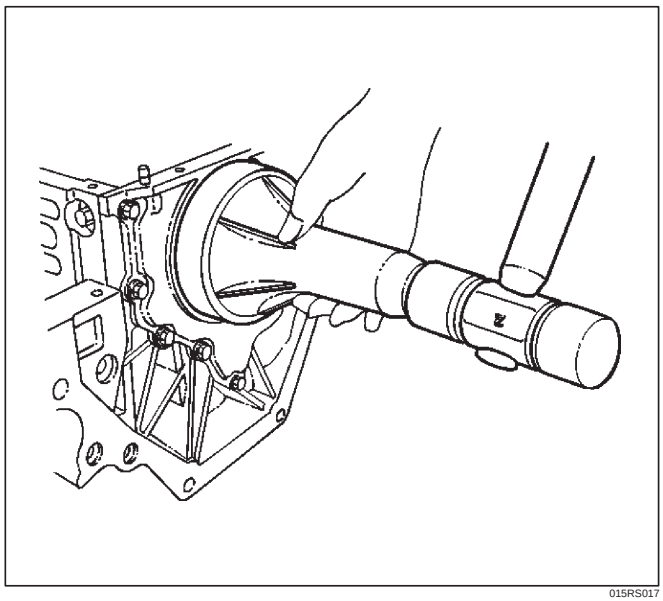

015RS017

3. Flywheel (9)
   1. Thoroughly clean and remove the oil from the threads of crankshaft.
   2. Remove the oil from the crankshaft and flywheel mounting faces.
   3. Mount the flywheel on the crankshaft and then install the washer.
   4. Hold the crankshaft to prevent from rotating then install the bolts in the order shown to the specified torque.

Torque: 54 N·m (5.5 Kg·m/40 lb ft)

NOTE: Do not reuse the bolt and do not apply oil or thread lock to the bolt.

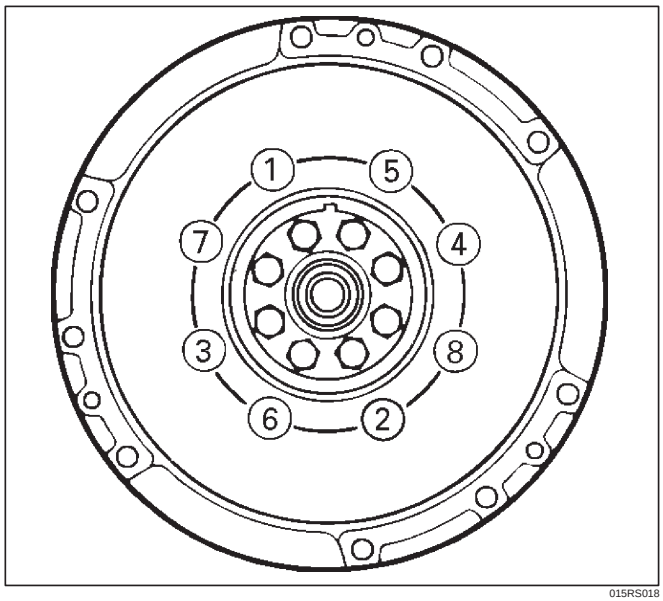

015RS018

4. Piston and connecting rod assembly (8)
   - Apply engine oil to the cylinder bores, the connecting rod bearings and the crankshaft pins. Check to see that the piston ring end gaps are correctly positioned.

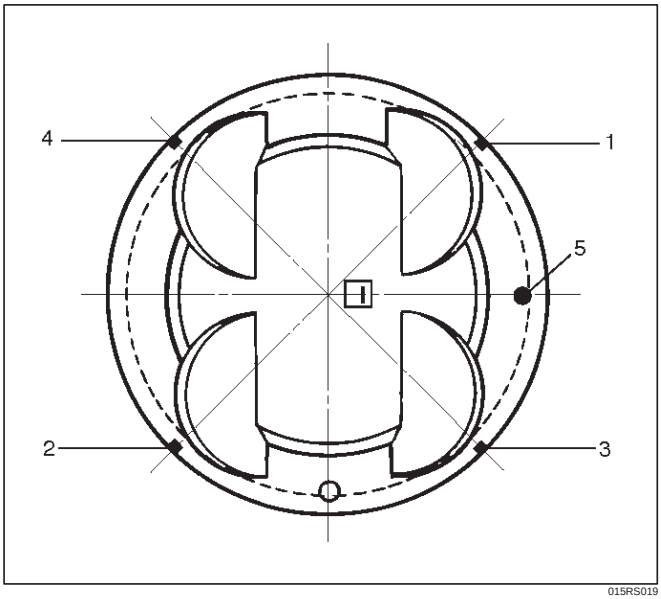

015RS019

Legend

(1) No.1 Compression Ring
(2) No.2 Compression Ring
(3) Oil Ring Side Rail Upper
(4) Oil Ring Side Rail Lower
(5) Piston Front Mark

- Insert the piston/connecting rod assemblies into each cylinder with the piston ring compressor. The front marks must be facing the front of the engine.
- Match the numbered caps with the numbers on the connecting rods. Align the punched marks on the connecting rods and caps.
- Apply engine oil to the threads and seating faces of the nuts.
- Tighten the nuts.

Torque: 54 N·m (5.5 Kg·m/40 lb ft)

After tightening the cap nuts, check to see that the crankshaft rotates smoothly.

NOTE: Do not apply engine oil to the bearing back faces.

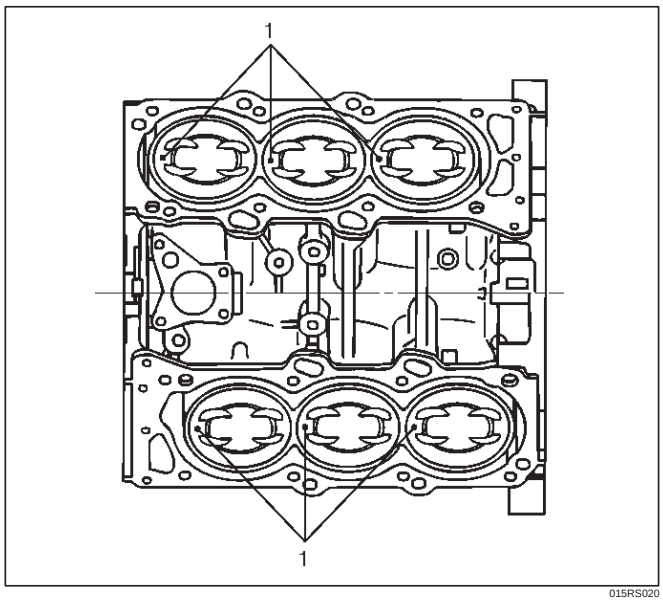

015RS020

5. Install oil gallery (7) and tighten the bolts in 2 steps, in the order shown.

1st step: 29 N·m (3.0 Kg·m/22 lb ft)

2nd step: 55°~ 65°

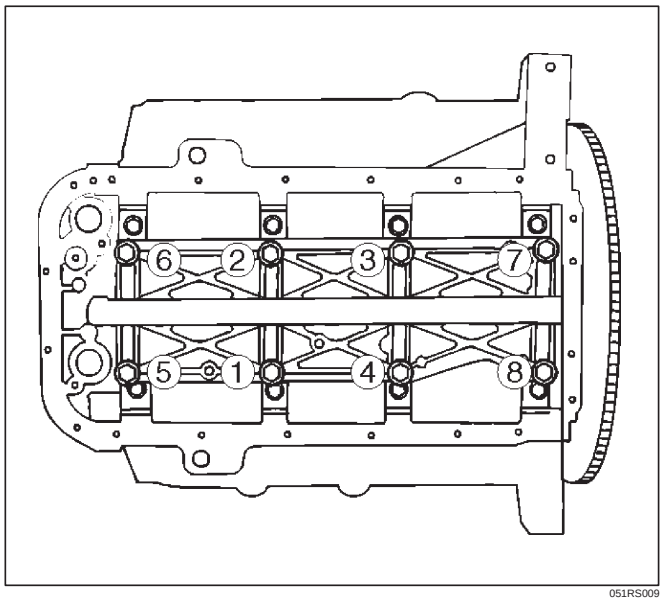

051RS009

6. Cylinder block side bolts (6)
   - Tighten all the bolts to the specified torque in the order shown.

NOTE: Do not apply engine oil to the crank case side bolts.

Torque: 39 N·m (4.0 Kg·m/29 lb ft)

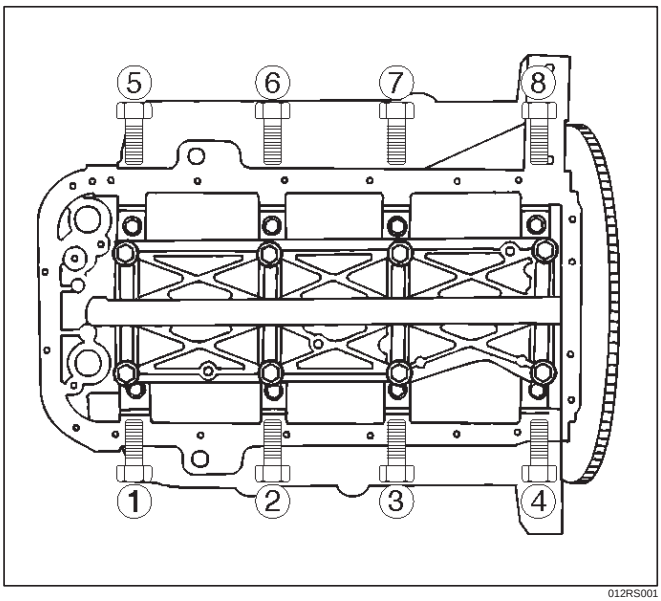

012RS001

7. Install oil pump assembly (5), refer to “Oil pump” in this manual.
8. Install oil strainer and O-ring (4).
9. Install oil pipe and O-ring (3) and tighten the bolts.

Torque: 25 N·m (2.5 Kg·m/18 lb ft)

10. Install crankcase with oil pan (2).
    1. Completely remove all residual sealant, lubricant and moisture from the sealing surfaces. The surfaces must be perfectly dry.
    2. Apply a correct width bead of sealant (TB—1207C or its equivalent) to the contact surfaces of the oil pan. There must be no gaps in the bead.
    3. The crankcase assembly must be installed within 5 minutes after sealant application to prevent premature hardening of the sealant.
    4. Tighten the bolts and nuts to the specified torque.

Torque : 10 N·m (1.0 Kg·m/89 lb in)

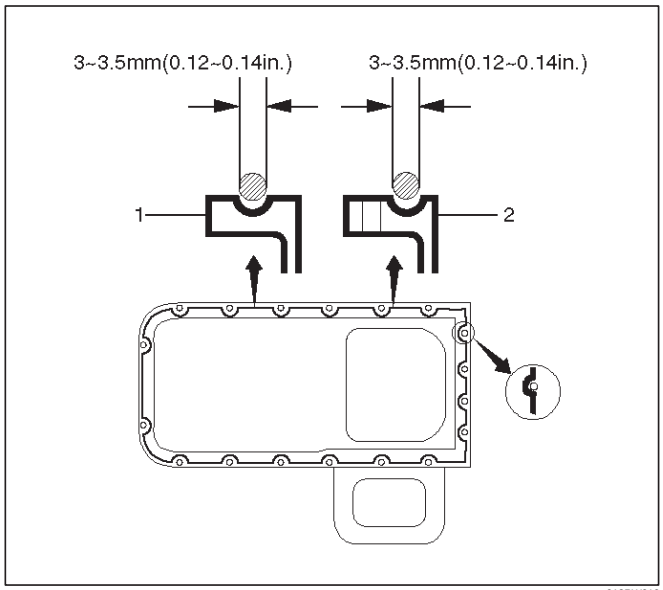

013RW010

Legend

(1) Portion Between Bolt Holes
(2) Bolt Hole Portion

11. Install cylinder head assembly, refer to “Cylinder head” in this manual.

Piston and Connecting Rod

Piston, Connecting Rod and Associate Parts

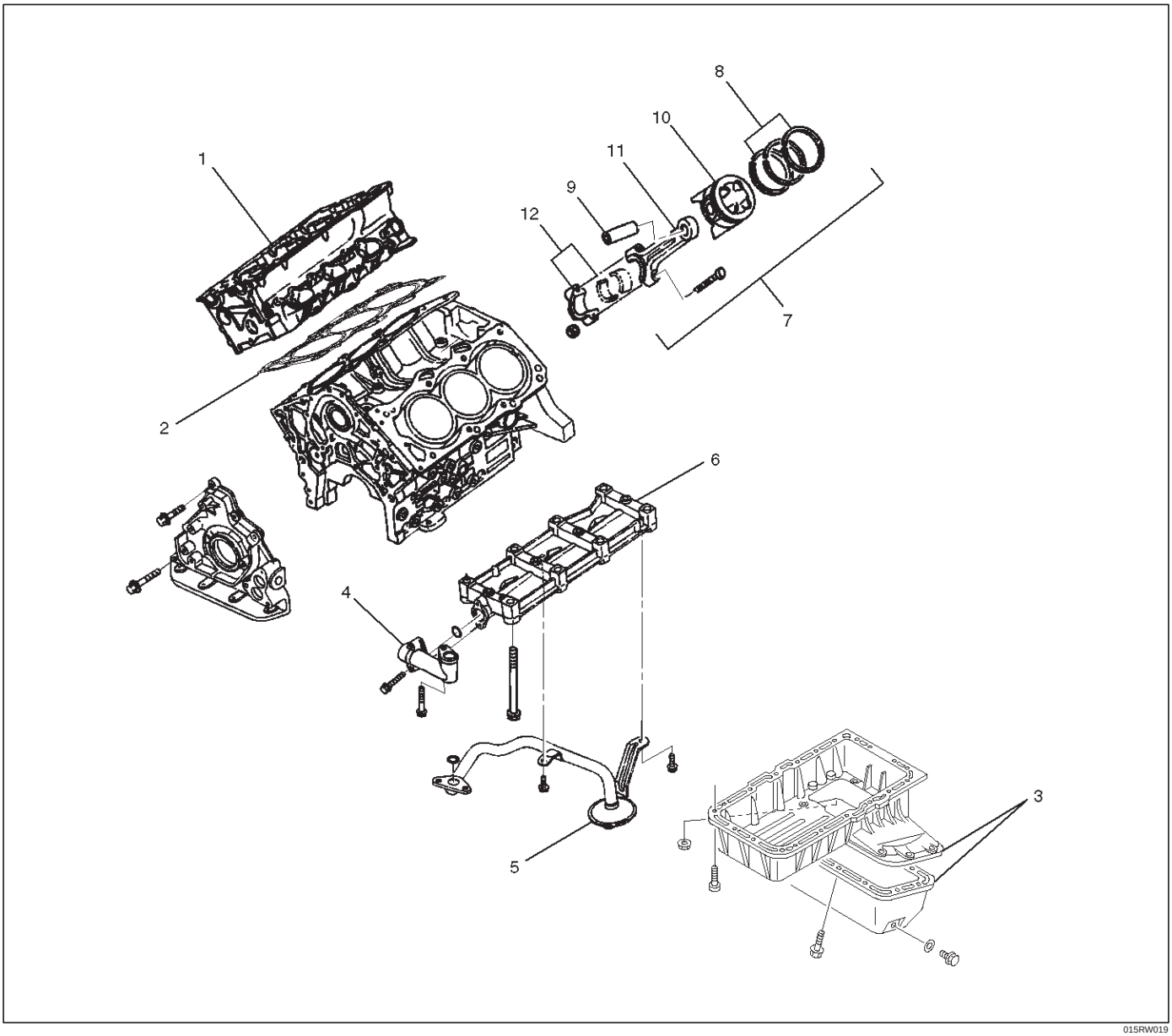

Legend

(1) Cylinder Head Assembly
(2) Cylinder Head Gasket
(3) Crankcase with Oil Pan
(4) Oil Pipe and O-Ring
(5) Oil Strainer and O-Ring
(6) Oil Gallery
(7) Piston and Connecting Rod Assembly
(8) Piston Ring
(9) Piston Pin
(10) Piston
(11) Connecting Rod
(12) Connecting Rod Cap

Disassembly

1. Remove cylinder head assembly (1). Refer to “Cylinder Head Removal” in this manual.
2. Remove cylinder head gasket (2).
3. Remove crankcase with oil pan (3). Refer to“Oil Pan and Crankcase” in this manual.
4. Remove oil pipe and O-ring (4).
5. Remove oil strainer and O-ring (5).
6. Remove oil gallery (6).
7. Remove connecting rod cap with connecting rod lower bearing (12).
8. Remove piston and connecting rod assembly (7).

NOTE: Before removing piston and connecting rod assembly, measure thrust clearance.

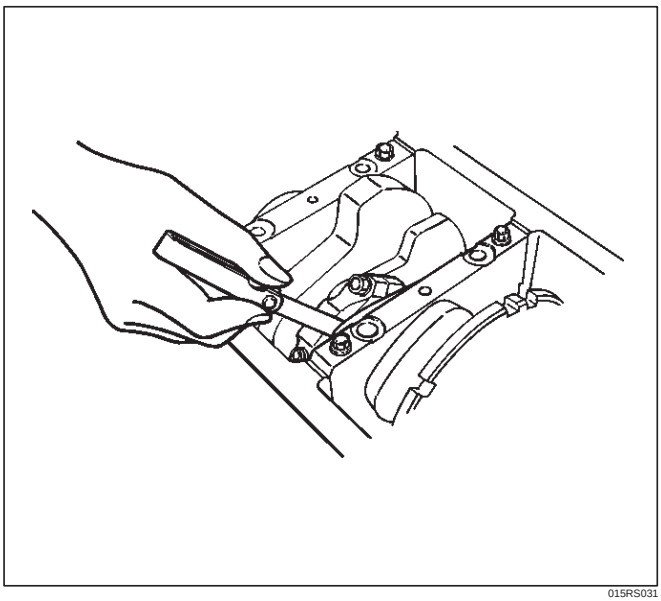

015RS031

- Remove any ridge or carbon build up from the top end of the cylinder.

9. Remove the piston rings (8) with a piston ring expander. Arrange the removed piston rings in the cylinder number order.

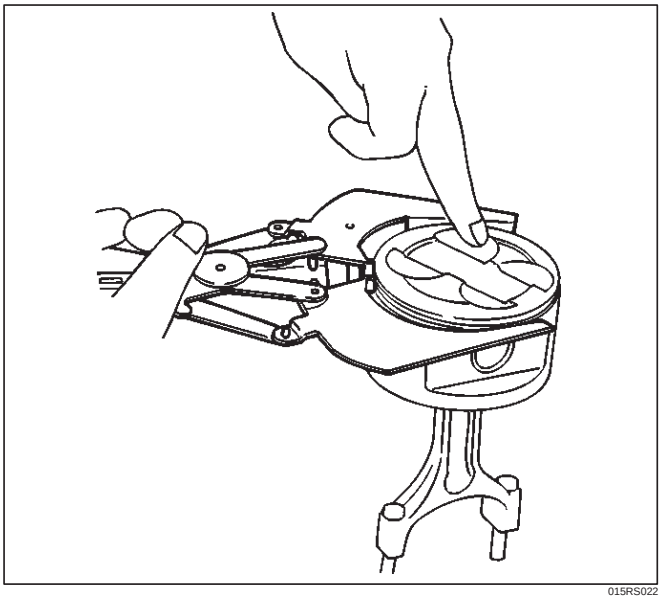

015RS022

10. Remove the piston pin (9) using 5–8840–0551–0 piston pin service set and piston support with a press.

NOTE: Keep the parts removed from each cylinder separate. All parts must be reinstalled in their original positions. Heating the connecting rod will permit easy removal of the piston pin.

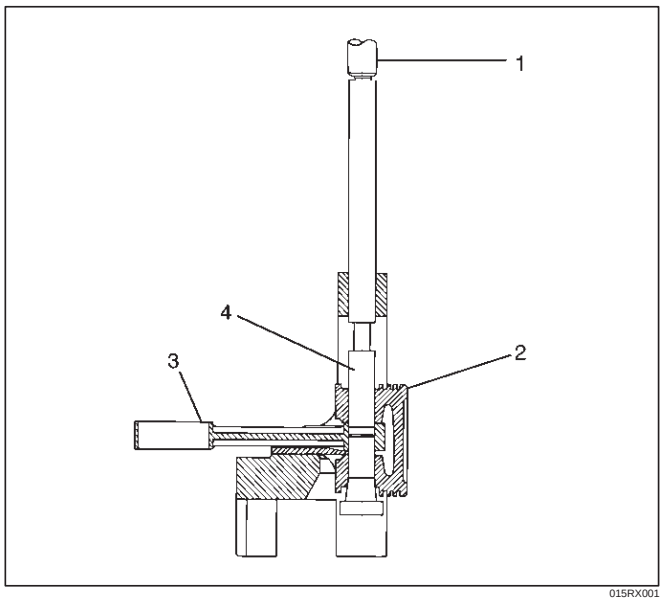

015RX001

Legend

(1) Press Ram
(2) Piston
(3) Connecting Rod
(4) Piston Pin

11. Piston (10)
12. Connecting rod (11)

Inspection and Repair

Pistons (10)

Carefully clean away all the carbon adhering to the piston head and the piston ring grooves.

NOTE: Never use a wire brush to clean the pistons. Damage will result. Visually check each piston for cracking, scoring, and other signs of excessive wear. If any of the above conditions are found, the piston must be replaced.

Piston Diameter

1. Measure the piston outside diameter with micrometer at the piston grading position and a right angle to the piston pin.
   Piston grading position (from piston head)

   Piston grading position : 43.0 mm (1.6929 in)

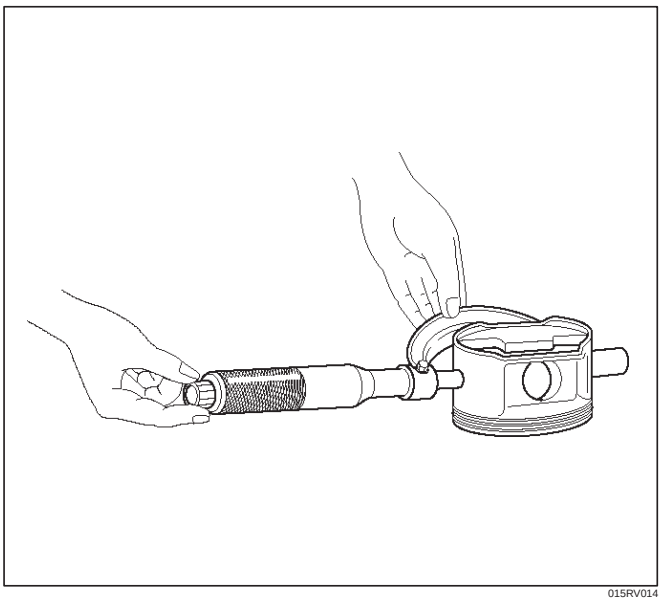

015RV014

The size mark (1) for piston outside diameter is represented as shown in illustration below.

Outside Diameter

Size Mark A : 93.360 mm–93.370 mm (3.6756 in–3.6760 in)

Size Mark B : 93.371 mm–93.380 mm (3.6760 in–3.6764 in)

Size Mark C : 93.381 mm–93.390 mm (3.6764 in–3.6768 in)

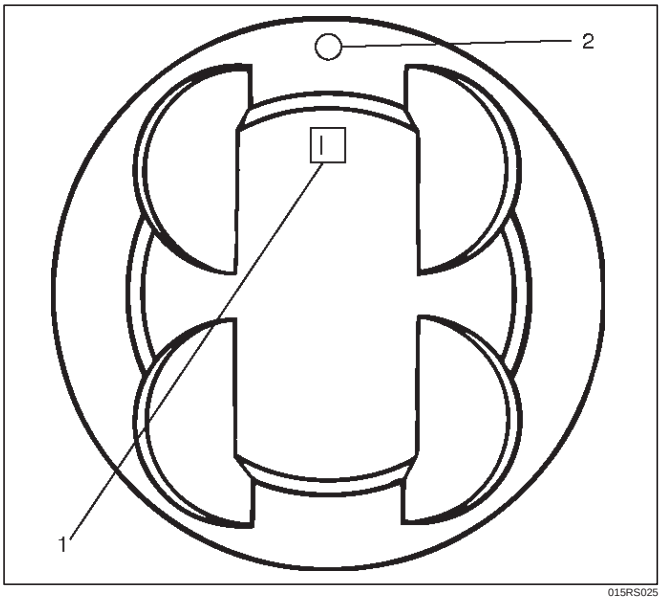

015RS025

Measure the cylinder bore inside diameter (refer to “Cylinder Block” in this manual).

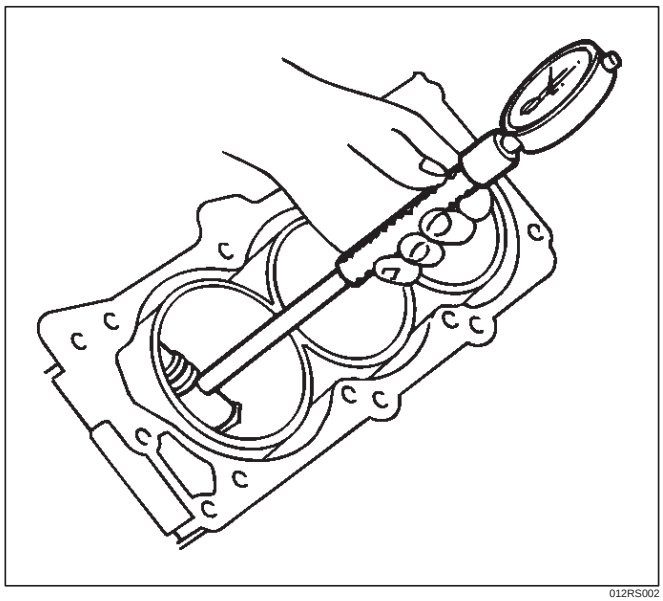

012RS002

Piston Rings (8)

Any worn or damaged part discovered during engine overhaul must be replaced with a new one.

1. Ring end gap measurement
   - Insert the piston ring into the bore.
   - Push the ring by the piston, at a right angle to the wall, into the point at which the cylinder bore diameter is the smallest.
   - Measure the ring end gap.

Compression Ring

1st ring	
Standard:	**0.300 mm–0.400 mm (0.0118 in–0.0157 in)**
Limit:	**1.0 mm (0.0394 in)**
2nd ring	
Standard:	**0.450 mm–0.600 mm (0.0177 in–0.0236 in)**
Limit:	**1.2 mm (0.0472 in)**
Oil ring	
Standard:	**0.150 mm–0.450 mm (0.0059 in–0.0177 in)**
Limit:	**1.05 mm (0.0413 in)**

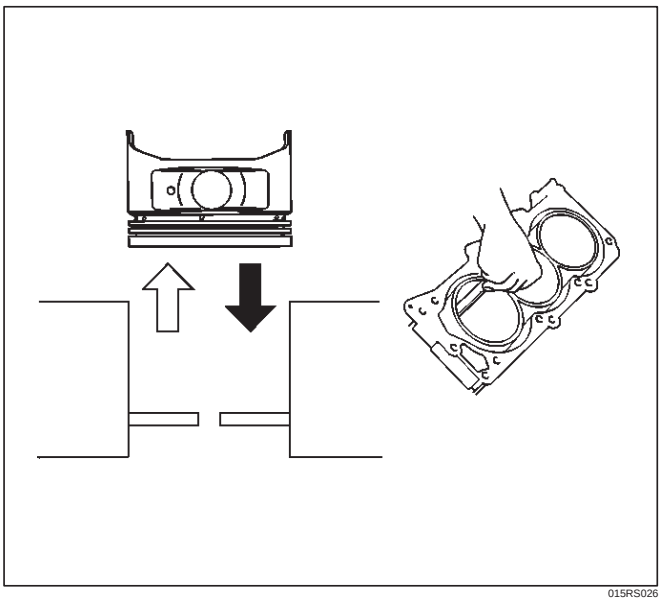

015RS026

- Positioning mark (1) is painted as shown in the illustration.

Marked T : No.1 Compression ring

Marked T2 : No.2 Compression ring

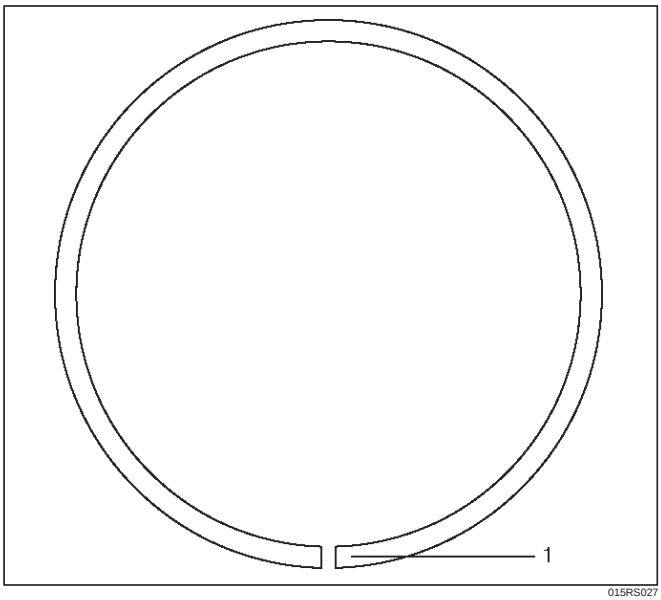

015RS027

2. Measure the clearance between the piston ring groove and the piston ring with a feeler gauge. If the piston ring groove / piston ring clearance exceeds the specified limit, the piston must be replaced.

Compression Ring Clearance

Standard : 0.016 mm–0.038 mm (0.0006 in.–0.0015 in)

Limit : 0.15mm (0.0059 in)

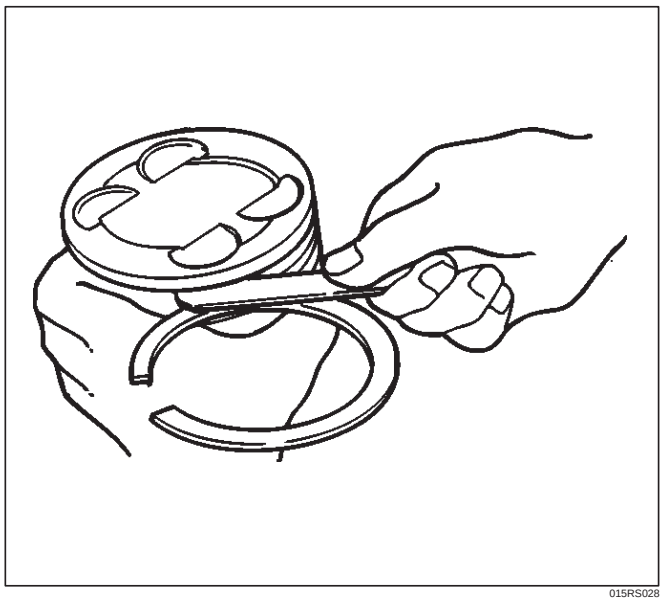

015RS028

Piston Pin (9)

NOTE: Do not reuse the old piston pin.

1. Use a micrometer to measure the new piston pin outside diameter in both directions at three different positions.
2. Measure the inside diameter of the connecting rod small end. If the fitting interference between the small end and pin does not conform to the specified value, the connecting rod must be replaced.

Standard : 0.023 mm–0.038 mm (0.0009 in–0.0015 in)

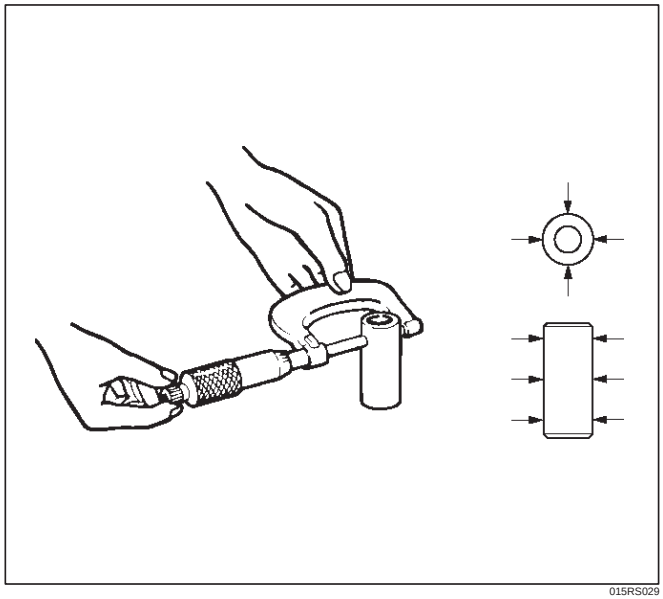

015RS029

3. Insert the new pin into the piston and rotate it. If the pin rotates smoothly with no backlash, the clearance is normal. If there is backlash or roughness, measure the clearance. If the clearance exceeds the specified limit, the piston must be replaced.

Clearance

Standard : 0.010 mm–0.017 mm (0.0004 in.–0.0007 in)

Limit : 0.040 mm (0.0016 in)

Connecting Rods (11)

1. Check the connecting rod alignment If either the bend or the twist exceeds the specified limit, the connecting rod must be replaced.

   Bend per 100 mm (3.937 in)

   Limit: 0.15 (0.0059)

   Twist per 100 mm (3.937 in)

   Limit: 0.20 (0.0078)

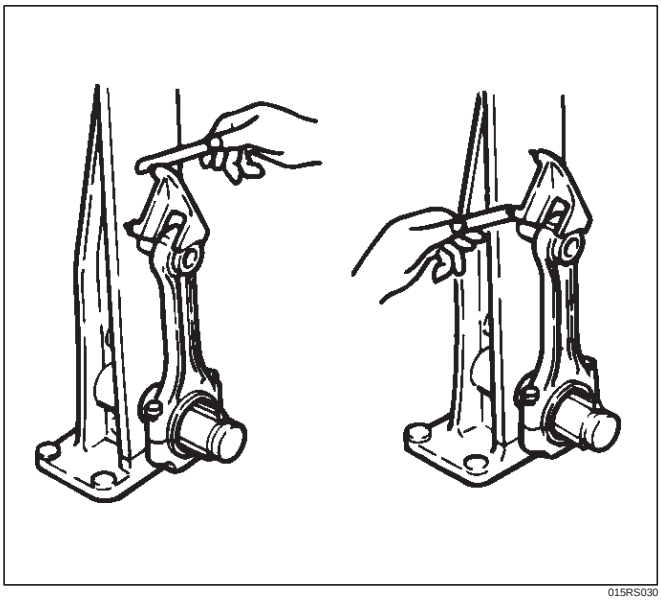

015RS030

2. Measure the connecting rod thrust clearance. Use a feeler gauge to measure the thrust clearance at the large end of the connecting rod If the clearance exceeds the specified limit, the connecting rod must be replaced.

   Standard : 0.16 mm–0.35 mm (0.0063 in.–0.0138 in)

   Limit : 0.40 mm (0.0157 in)

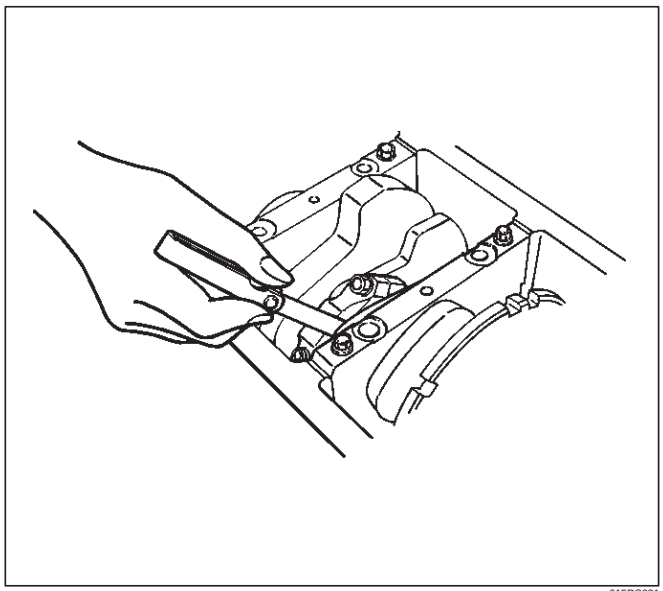

015RS031

3. Measure the oil clearance between the connecting rod and the crankshaft.
   1. Remove the connecting rod cap nuts and the rod caps (12).
      Arrange the removed rod caps in the cylinder number order.
   2. Clean the rod bearings and the crankshaft pins.
   3. Carefully check the rod bearings. If even one bearing is found to be damaged or badly worn, the entire bearing assembly must be replaced as a set. Reinstall the bearings in their original positions. Apply plastigage to the crank pin.

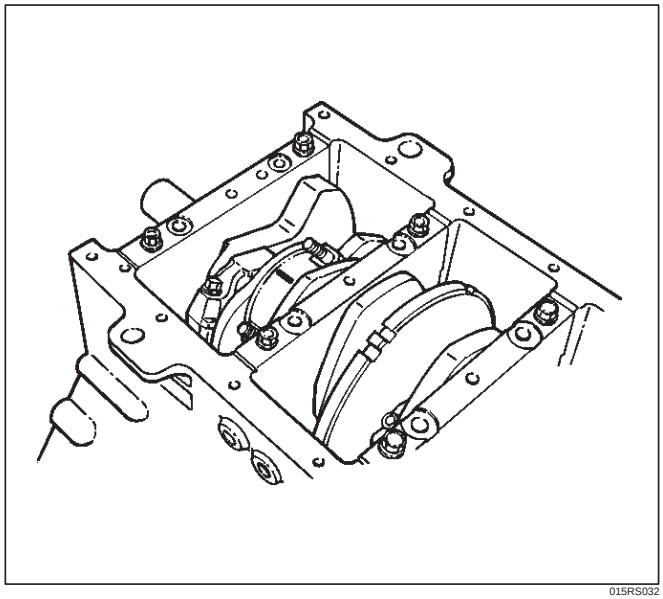

015RS032

4. Reinstall the rod caps (12) to their original positions.

   Tighten the rod cap nuts.

Torque: 54 N·m (5.5 kg·m/40 lb ft)

NOTE: Do not allow the crankshaft to rotate.

5. Remove the rod caps.
6. Measure the width of the plastigage and determine the oil clearance. If the oil clearance exceeds the limit, replace the rod bearing as a set.

Standard : 0.019 mm–0.043 mm (0.0007 in–0.0017 in)

Limit : 0.08 mm (0.003 in)

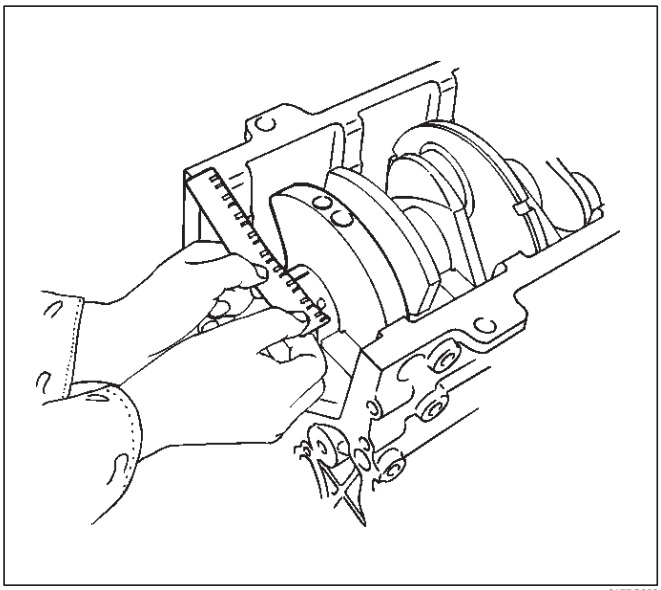

015RS008

7. Clean the plastigage from the bearings and the crankshaft pins.

Con–rod Bearing Selection

Select and install the new connecting rod bearings, paying close attention to the connecting rod big end diameter size mark (1).

NOTE: Take care not to confuse the alignment mark (2) and the size mark (1) during the installation procedure.

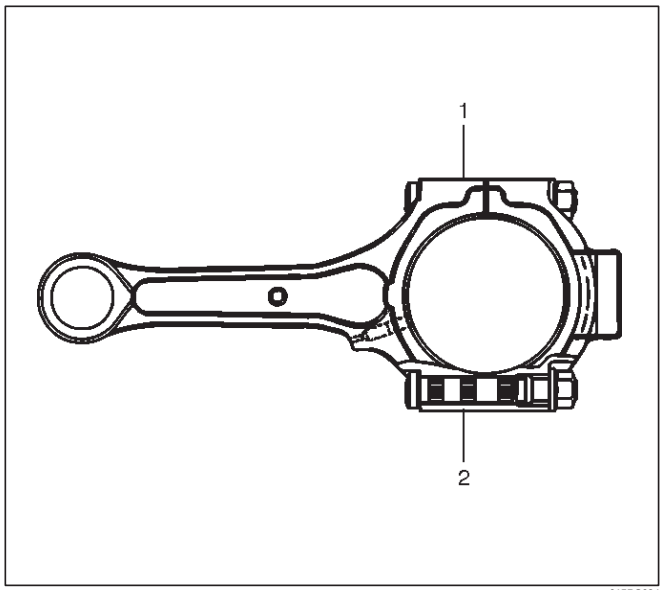

015RS034

1 Size Mark	Big end Bore Diameter	Crankshaft Pin Diameter	Connecting Rod Bearing Thickness (Reference)	Color of Size Mark	Oil Clearance (Reference)
A	56.994-57.000 (2.2439-2.2441)	53.922-53.937 (2.1229-2.1235)	1.512-1.516 (0.0595-0.0597)	Yellow	0.025-0.054 (0.0010-0.0021)
B	56.988-56.994 (2.2436-2.2439)		1.508-1.512 (0.0594-0.0595)	Green	0.027-0.056 (0.0011-0.0022)
C	56.982-56.988 (2.2434-2.2436)		1.504-1.508 (0.0592-0.0594)	Pink	0.029-0.058 (0.0011-0.0023)

Reassembly

1. Install connecting rod
2. Install piston
3. Install piston pin
   - Apply a thin coat of engine oil to the piston pin. Try to insert the piston pin into the piston pin hole with normal finger pressure.

NOTE: When changing piston / connecting rod combinations, do not change the piston / piston pin combination and do not reuse the old piston pin.

- Attach the piston to the connecting rod with the piston front mark and the connecting rod front mark on the same side.

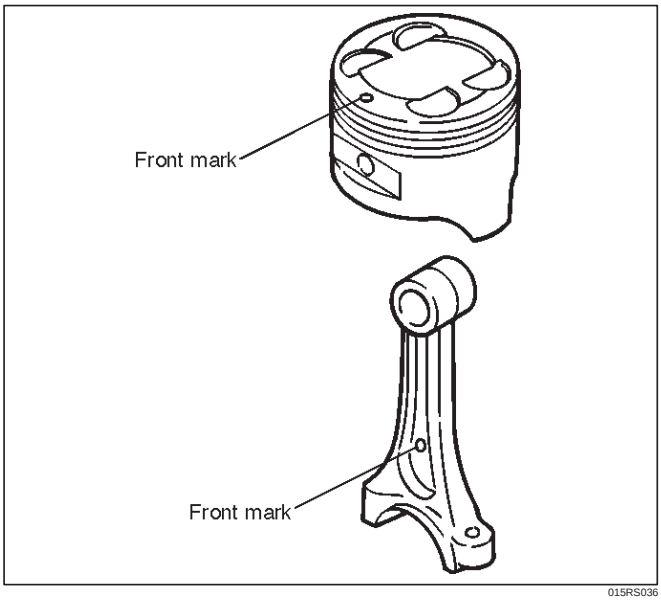

015RS036

- With 5–8840–0551–0 Piston pin service set and a press, press fit the piston pin.

NOTE: Heat the connecting rod small end to a suitable temperature to ensure smooth installation.

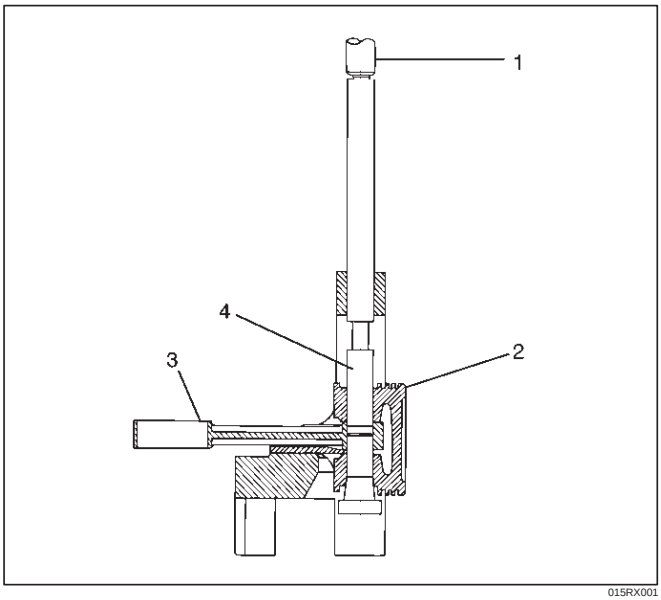

015RX001

Legend

(1) Press Ram
(2) Piston
(3) Connecting Rod
(4) Piston Pin

4. Install piston ring with the piston ring expander. The compression ring must be set with the T mark (1) facing up.

Marked T : No.1 Compression ring

Marked T2 : No.2 Compression ring

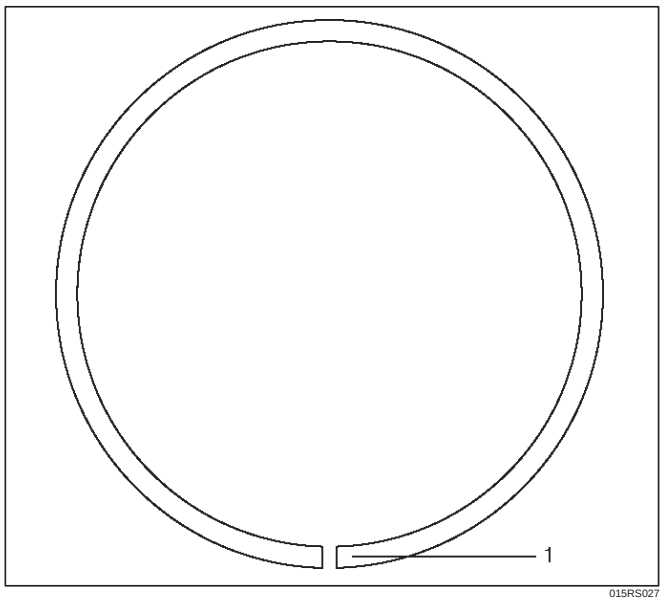

015RS027

- Install piston rings in the following sequence.

1. Oil ring
   1. Expander ring
   2. Upper side rail
   3. Lower side rail
2. 2nd compression ring
3. 1st compression ring

- The compression rings must be set with the T or T2 mark facing up.

Marked T : No.1 Compression ring

Marked T2 : No.2 Compression ring

- After installation, apply engine oil to the entire circumference of the piston rings. Check to see that all the rings rotate smoothly.

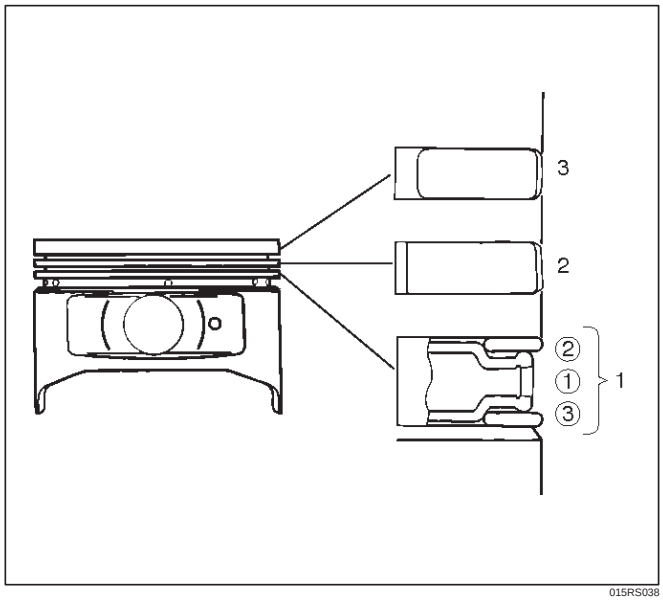

015RS038

5. Install piston and connecting rod assembly.

- Insert the bearings into the connecting rods and caps. Apply new engine oil to the bearing faces and nuts.

- Tighten the connecting rod cap nuts

Torque : 54 N·m (5.5 kg·m/40 lb ft)

NOTE: Do not apply engine oil to the bearing back faces.

6. Oil gallery, refer to “Crankshaft and main bearing” in this manual.
7. Oil strainer and O-ring.
8. Oil pipe and O-ring.
9. Install crankcase with oil pan, refer to “Oil pan and Crankcase” in this manual.
10. Install cylinder head gasket.
11. Install Cylinder head assembly.
    - Refer to “Cylinder head” in this manual.

Cylinder Block

Cylinder Block and Associated Parts

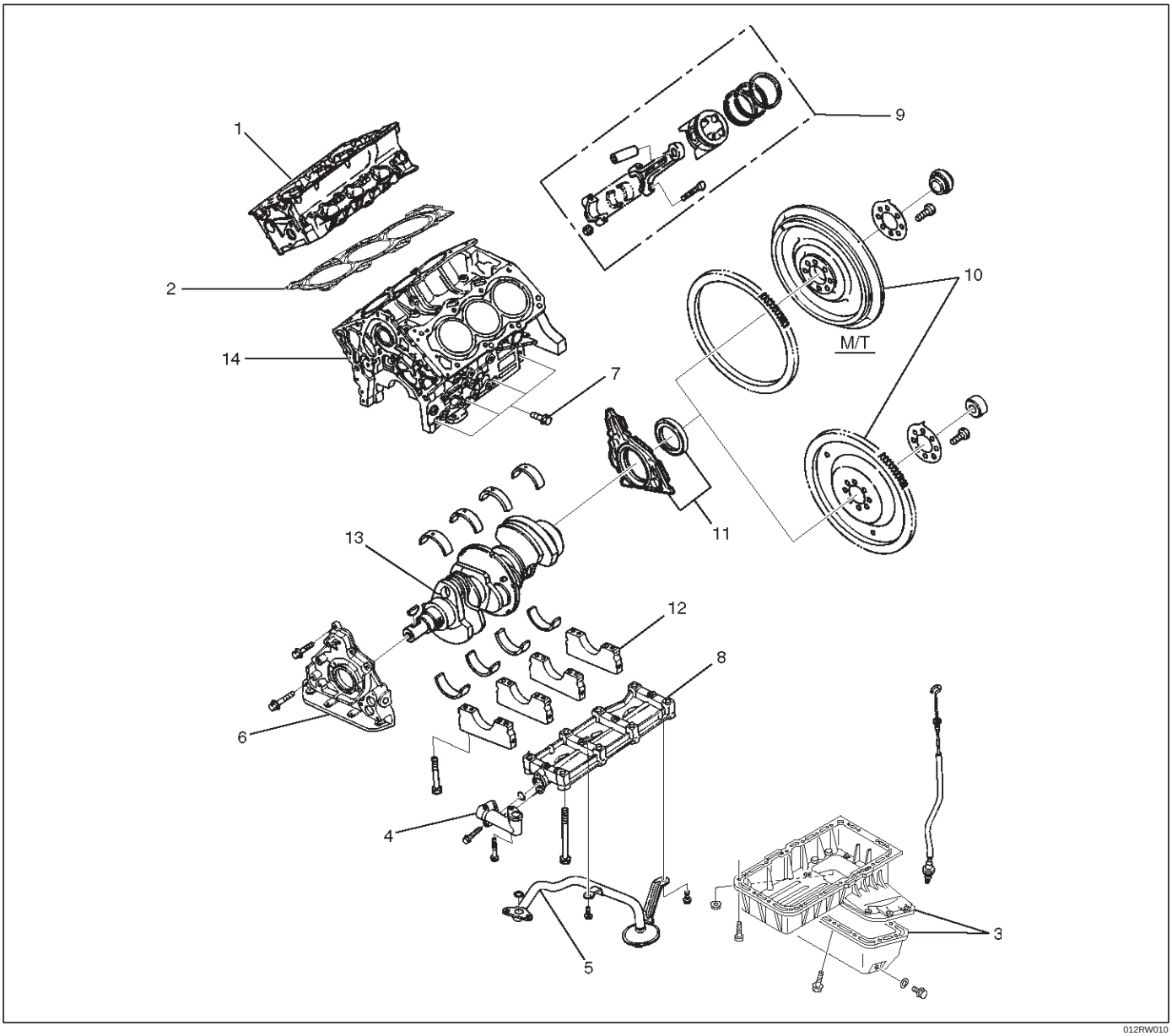

012RW010

Legend

(1) Cylinder Head Assembly
(2) Cylinder Head Gasket
(3) Crankcase with Oil Pan
(4) Oil Pipe and O-Ring
(5) Oil Strainer and O-Ring
(6) Oil Pump Assembly
(7) Cylinder Block Side Bolts
(8) Oil Gallery
(9) Piston and Connecting Rod Assembly
(10) Flywheel
(11) Rear Oil Seal Retainer Assembly
(12) Main Bearing Cap
(13) Crankshaft
(14) Cylinder Block

Disassembly

1. Remove cylinder head assembly.
2. Remove cylinder head gasket.
3. Remove crankcase with oil pan.
4. Remove oil pipe and O-ring.
5. Remove oil strainer and O-ring.
6. Remove oil pump assembly.
7. Remove crankcase side bolts.
8. Remove oil gallery.
9. Remove piston and connecting rod assembly.
10. Remove flywheel.

11. Remove rear oil seal retainer assembly.
12. Remove main bearing cap.
13. Remove crankshaft.
14. Remove cylinder block.

Inspection and Repair

1. Remove the cylinder head gasket and any other material adhering to the upper surface of the cylinder block. Be very careful not to allow any material to accidentally drop into the cylinder block. Be very careful not to scratch the cylinder block.
2. Carefully remove the oil pump, rear oil seal retainer, and crankcase assembly installation surface seal.
3. Wipe the cylinder block clean.
4. Visually inspect the cylinder block. If necessary, use a flaw detector to perform a dye penetrate and hydraulic (or air pressure) test. If cracking or other damage is discovered, the cylinder block must either be repaired or replaced.

Flatness

1. Using a straight–edge and feeler gauge, check that the upper surface of the cylinder block is not warped.

CAUTION: Be very careful not to allow any material to accidentally drop into the upper surface of the cylinder block. Be very careful not to scratch the upper surface of the cylinder block.

2. The cylinder block must be reground or replaced if the warpage exceeds the limit.

Warpage

Limit : 0.15 mm (0.0059 in)

Maximum repairable limit: 0.15 mm (0.0059 in)

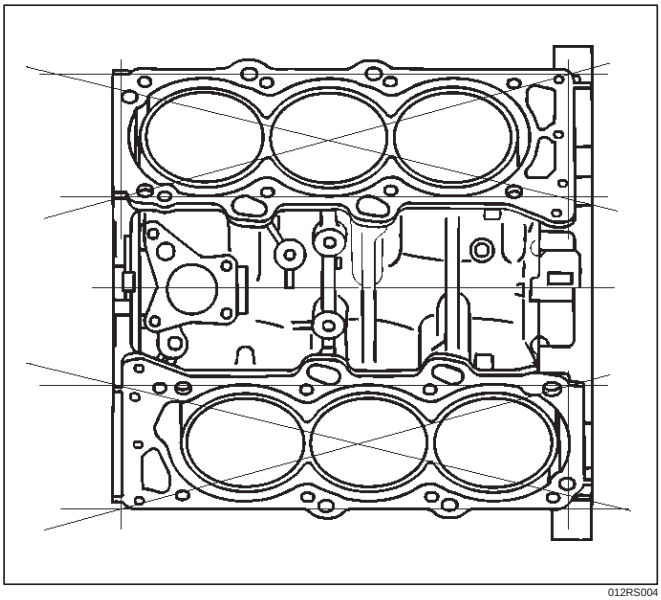

012RS004

Cylinder Bore

Use a cylinder gauge to measure the cylinder bore diameter in both the axial and thrust directions. Each measurement should be made at six points.

CAUTION: Be very careful not to allow any material to accidentally drop into the upper surface of the cylinder block. Be very careful not to scratch the upper surface of the cylinder block.

Cylinder Bore Inside Diameter

Limit : 93.530 (3.6823)

If the measurement exceed the specified limit, the cylinder block must be replaced.

Diameter

Grade A : 93.400 mm–93.410 mm (3.6772 in–3.6776 in)

Grade B : 93.411 mm–93.420 mm (3.6776 in–3.6779 in)

Grade C : 93.421 mm–93.430 mm (3.6780 in–3.6783 in)

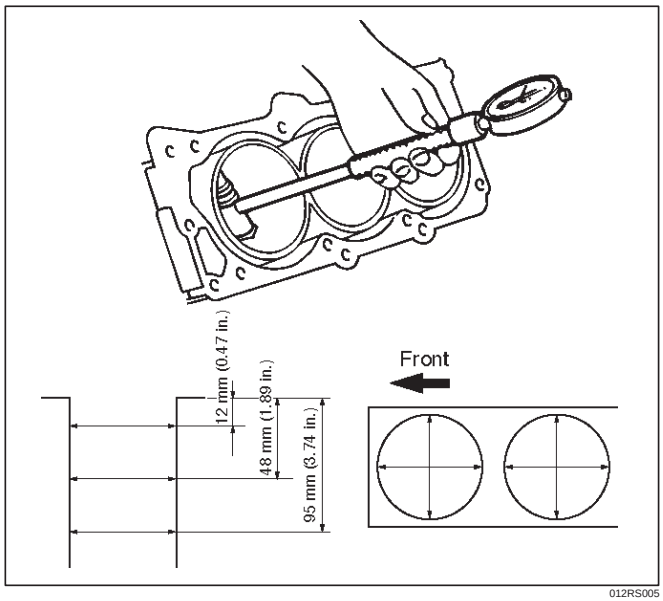

012RS005

NOTE: For information on piston diameter, please refer to the section ”Inspection of the Piston and Connecting Rod Assembly” in this manual.

- The ”Grade” mark (1) is stamped at the position illustrated.

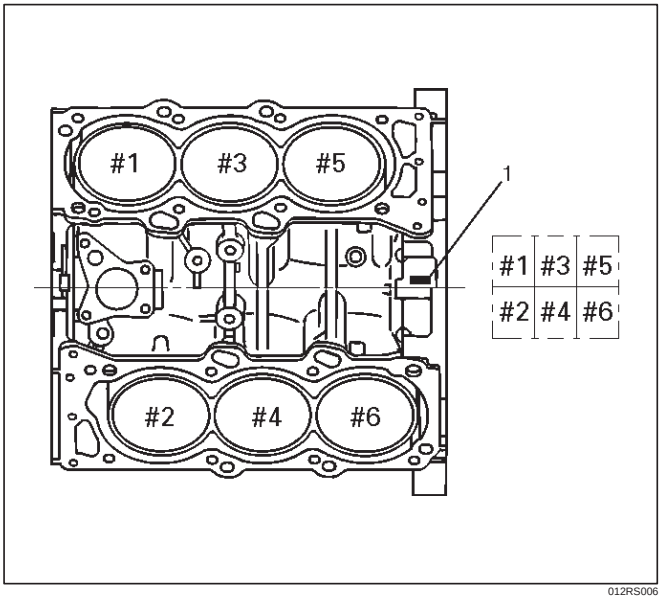

012RS006

Reassembly

1. Install cylinder block.
2. Install crankshaft.
   - Install the main bearings to the cylinder block and the main bearing caps.
   - Be sure that they are positioned correctly.
   - Apply new engine oil to the upper and lower main bearing faces.

NOTE: Do not apply engine oil to the bearing back faces.

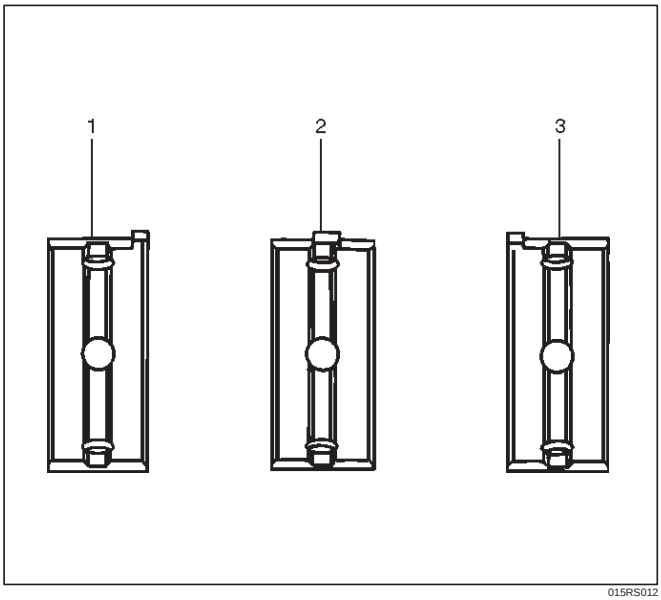

015RS012

Legend

(1) Number 1 and 4 main bearing upper and lower.
(2) Number 2 and 3 main bearing upper.
(3) Number 2 and 3 main bearing lower.

- Carefully mount the crankshaft.
- Apply engine oil to the thrust washer.
- Assemble the thrust washer to the No. 3 bearing journal. The oil grooves must face the crankshaft.

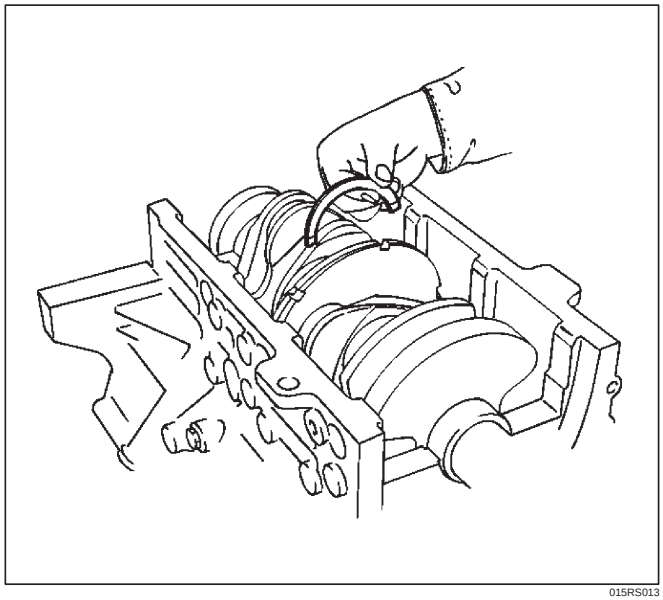

015RS013

3. Install rear oil seal retainer.
   - Remove oil on cylinder block and retainer fitting surface.
   - Apply sealant (TB1207B or equivalent) to retainer fitting surface as shown in illustration.
   - The oil seal retainer must be installed within 5 minutes after sealant application before the sealant hardens.

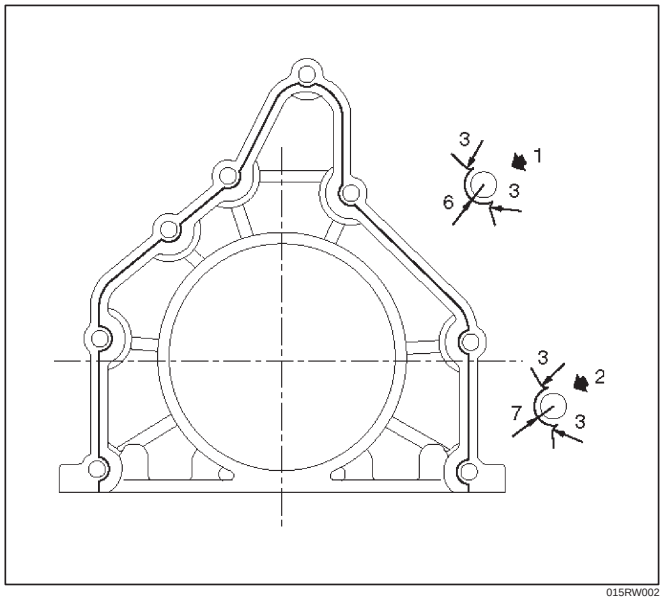

015RW002

Legend

(1) Around Bolt Holes
(2) Around Dowel Pin

- Apply engine oil to oil seal lip and align a dowel pin hole in the cylinder block with that in the retainer.
- Tighten retainer fixing bolts to the specified torque.

Torque: 25 N·m (2.5 kg·m/18.4 lb ft)

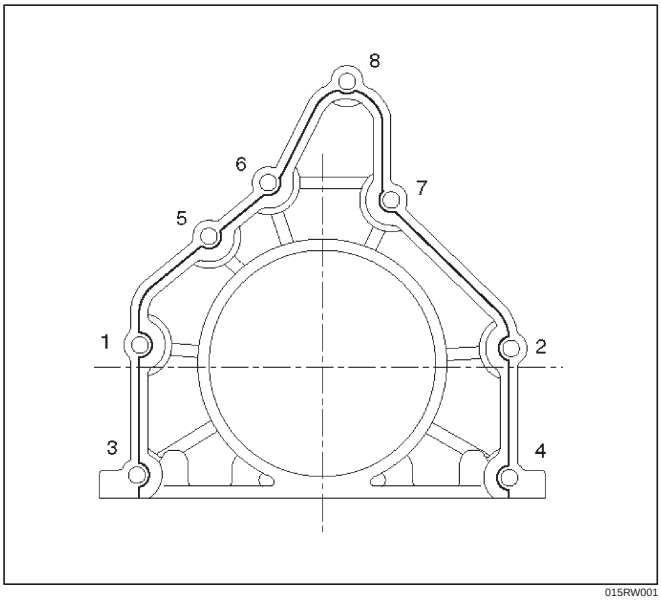

015RW001

4. Install flywheel
   1. Thoroughly clean and remove the oil from the threads of crankshaft.
   2. Remove the oil from the crankshaft and flywheel mounting faces.
   3. Mount the flywheel on the crankshaft and then install the washer.
   4. Holding the crankshaft stationary, tighten the flywheel bolts in the order shown.

Torque: 54 N·m (5.5 kg·m/40 lb ft)

NOTE: Do not reuse the bolts and do not apply oil or thread lock to the bolts.

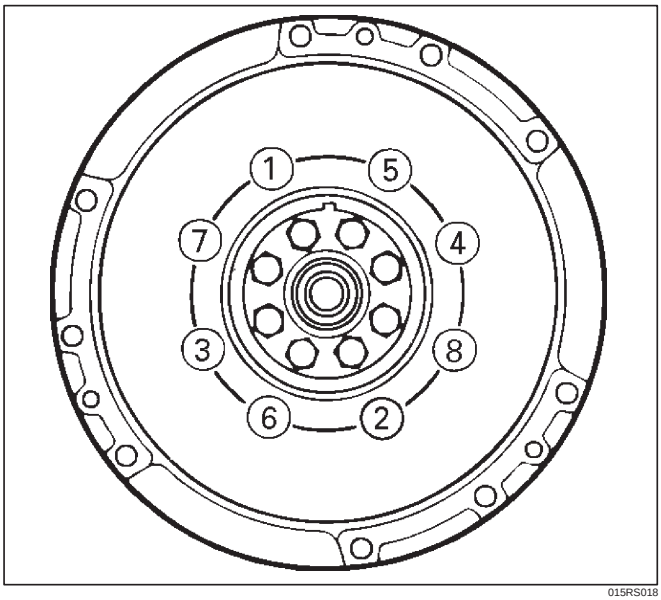

015RS018

5. Install piston and connecting rod assembly.
   - Apply engine oil to the cylinder bores, the connecting rod bearings and the crankshaft pins.

NOTE: Do not apply engine oil to the bearing back faces.

- Check to see that the piston ring end gaps are correctly positioned.

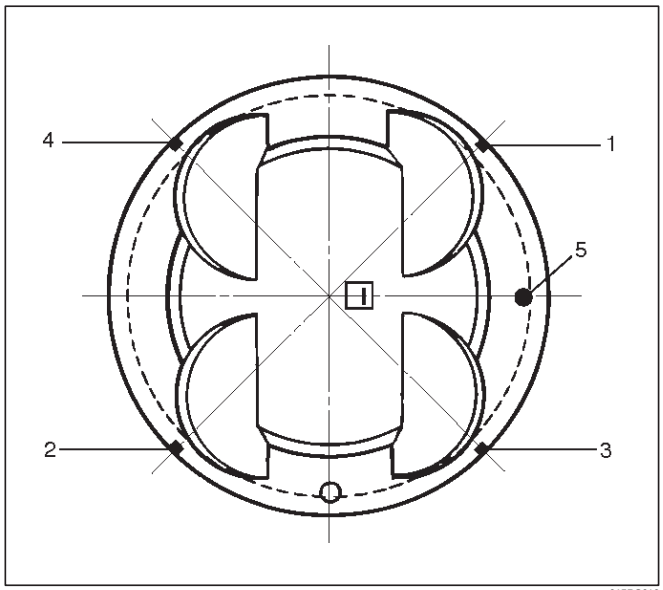

015RS019

Legend

(1) No.1 Compression Ring
(2) No.2 Compression Ring
(3) Oil Ring Side Rail Upper
(4) Oil Ring Side Rail Lower
(5) Piston Front Mark

- Insert the piston/connecting rod assemblies into each cylinder with the piston ring compressor.
- The front marks (1) must be facing the front of the engine.

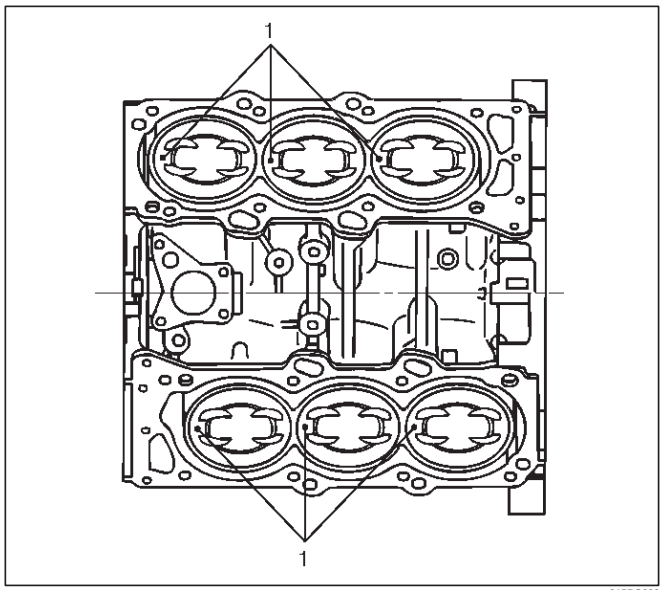

015RS020

6. Install oil gallery and tighten the bolts in 2 steps in the order shown.

1st step : 29 N·m (3.0 kg·m/22 lb ft)

2nd step : 55˚~ 65˚

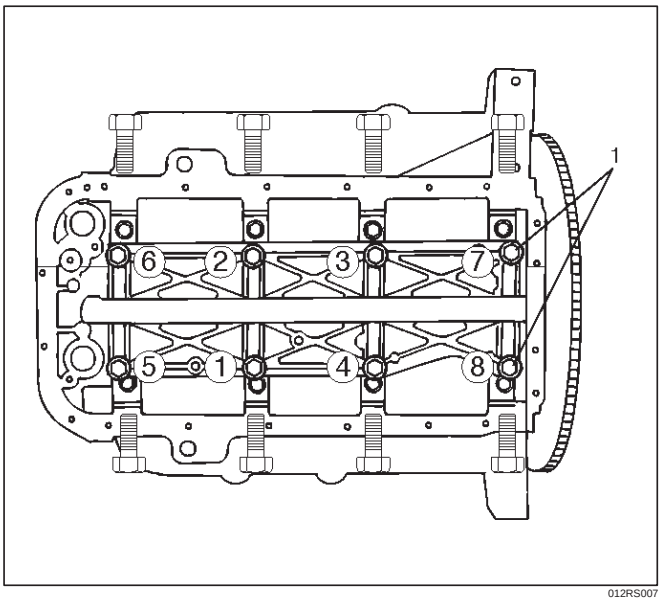

012RS007

7. Install cylinder block side bolts (1) and tighten crankcase bolts in sequence shown in the illustration.

Torque : 39 N·m (4.0 kg·m/29 lb ft)

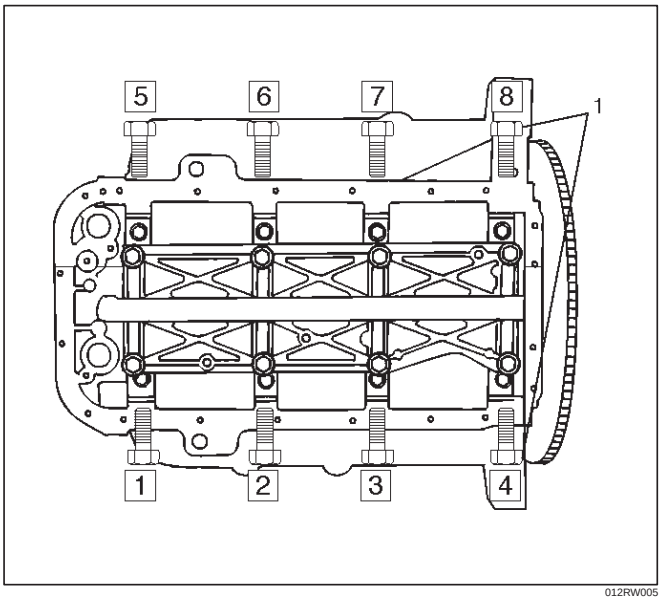

012RW005

8. Install oil pump assembly. Refer to “Oil Pump” in this manual.
9. Install oil strainer and O-ring.
10. Install oil pipe and O-ring.
11. Install crankcase with oil pan.
    1. Completely remove all residual sealant, lubricant and moisture from the sealing surfaces. The surfaces must be perfectly dry.
    2. Apply a correct width bead of sealant (TB– 1207C or its equivalent) to the contact surfaces of the crankcase. There must be no gaps in the bead.
    3. The oil pan must be installed within 5 minutes after sealant application to prevent premature hardening of sealant.
    4. Tighten the bolts and nuts to the specified torque.

Torque : 10 N·m (1.0 kg·m/89 lb in)

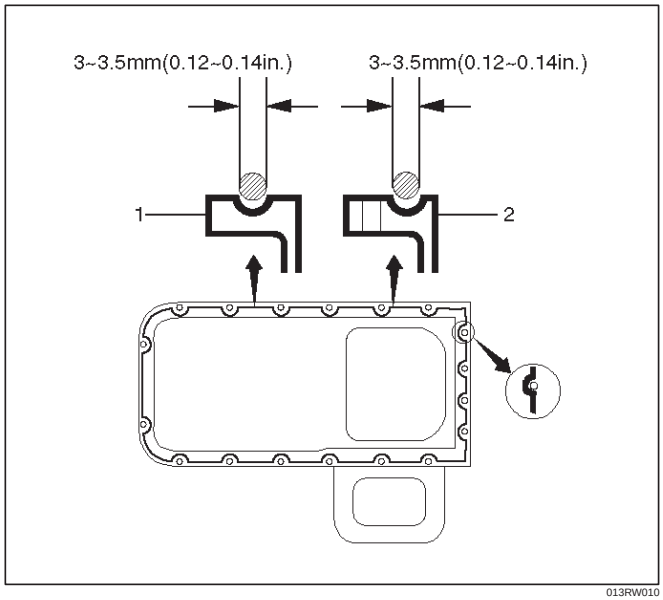

013RW010

Legend

(1) Portion Between Both Holes
(2) Bolt Hole Portions

12. Install cylinder head gasket.
13. Install cylinder head assembly. Refer to “Cylinder Head” in this manual.

Main Data and Specification

General Specification

Item	Specifications
	6VD1
Engine type, number of cylinders and arrangement	Water cooled, four cycle V6
Form of combustion chamber	Pent-roof type
Valve mechanism	4-Cams, 4-Valves, DOHC Gear & Belt Drive
Cylinder liner type	Casted in cylinder drive
Total piston displacement	3165 cc
Cylinder bore x stroke	93.4mm x 77mm (3.677 in x 3.031 in)
Compression ratio	8.6
Compression pressure at 300rpm	1.37 MPa (14.0 Kg/cm^2)
Engine idling speed rpm	Non adjustable (750)
Valve clearance	Intake: 0.28 mm (0.11 in)
	Exhaust: 0.30mm (0.12 in)
Oil capacity	5.3 liters
Ignition timing	Non adjustable (16˚ BTDC at idle rpm)
Spark plug	PK16PR11, RC10PYP4, K16PR-P11
Plug gap	1.0 mm–1.1 mm(0.0394 in – 0.0433 in)

Torque Specifications

Ignition coil, Spark plug, Crankshaft angle sensor and Under cover

N·m (kg·m/ lb·ft)

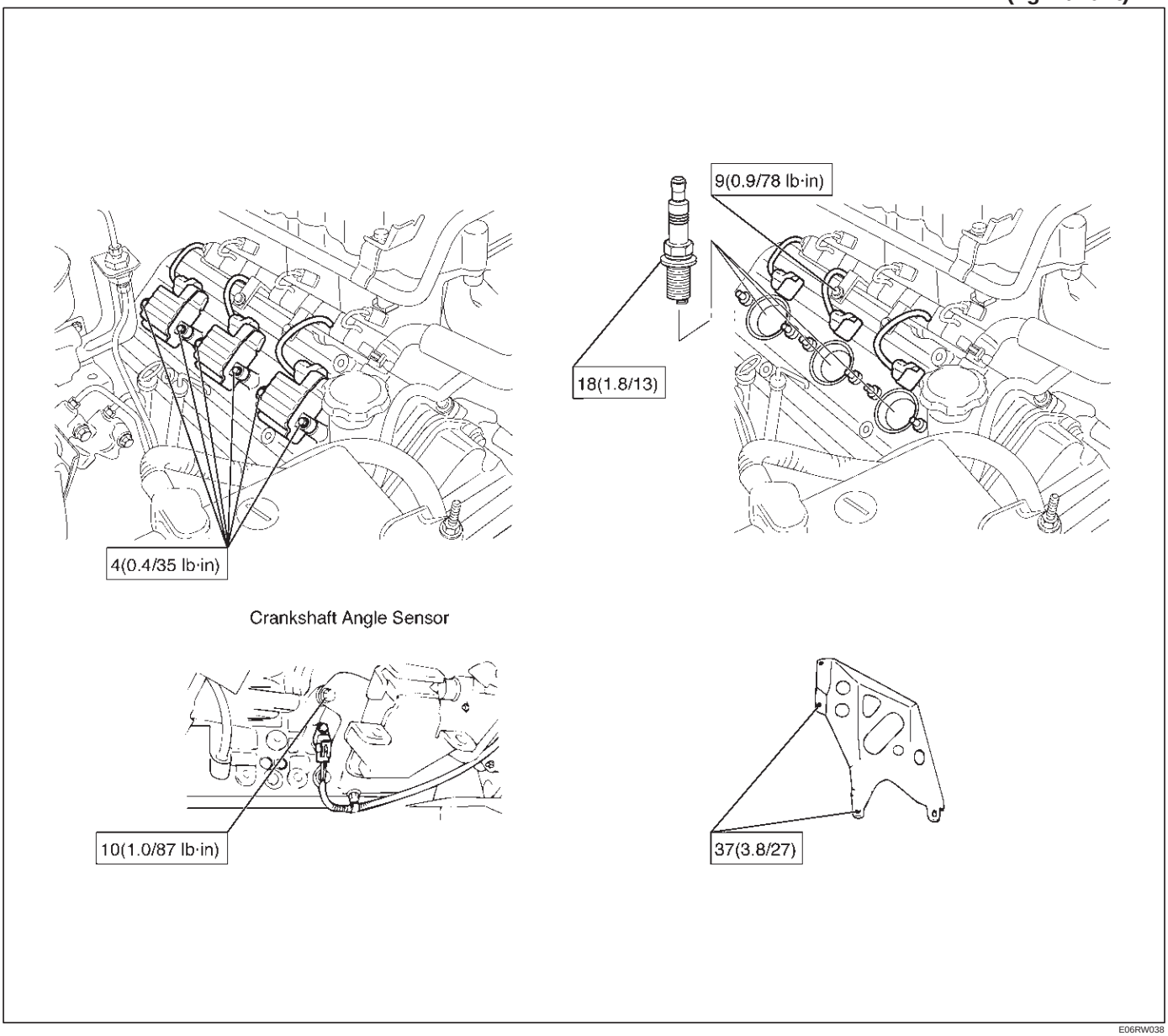

E06RW038

Cylinder head cover, Cylinder head, Camshaft bracket, Common chamber, ECM

N·m (kg·m/ lb·ft)

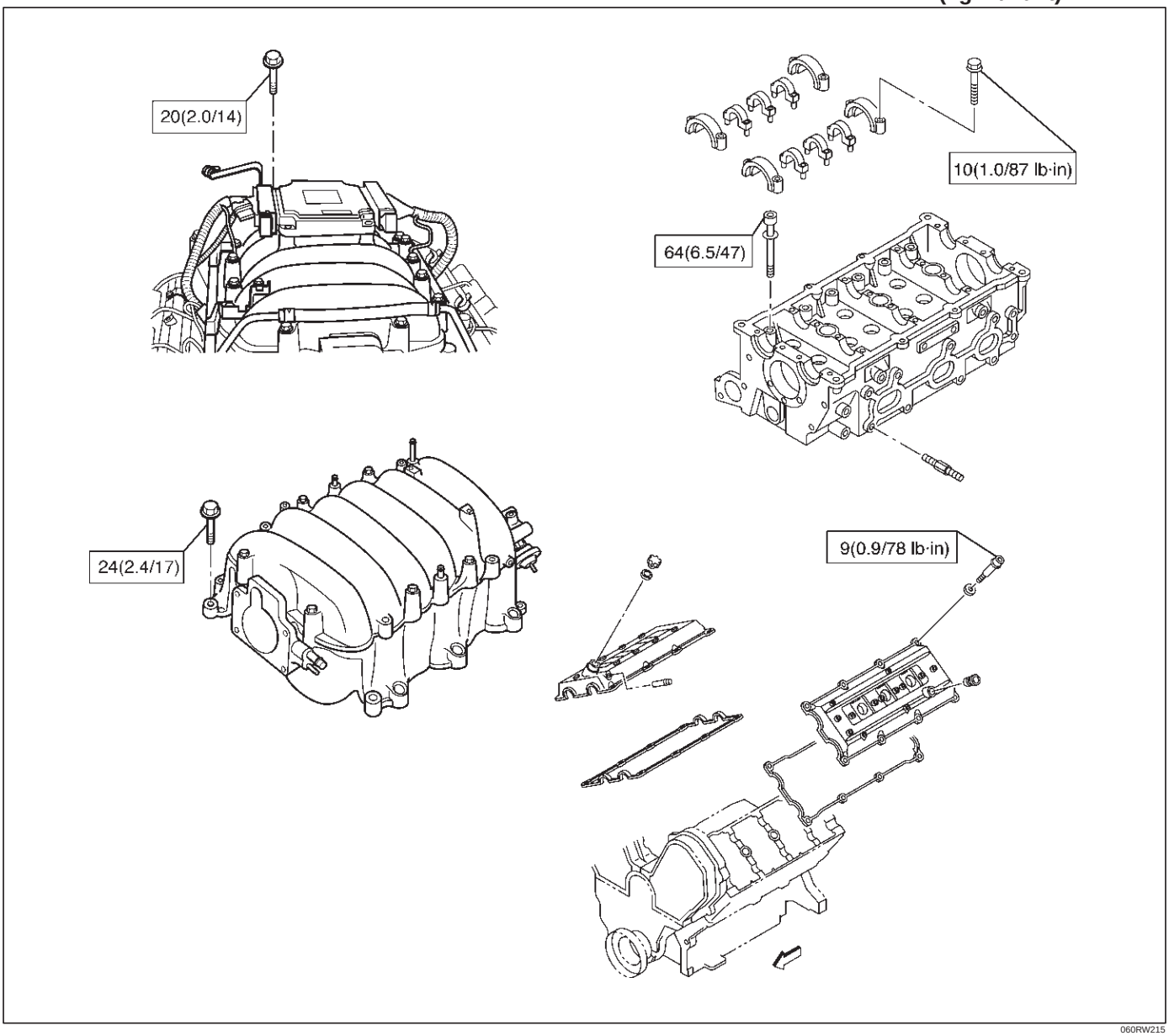

060RW215

Crankshaft main bearing, Flywheel, Crankcase, Oil pan, Timing belt tensioner, Timing pulley, timing belt cover, Oil pump, Oil gallery, Oil strainer and water pump

N·m (kg·m/ lb·ft)

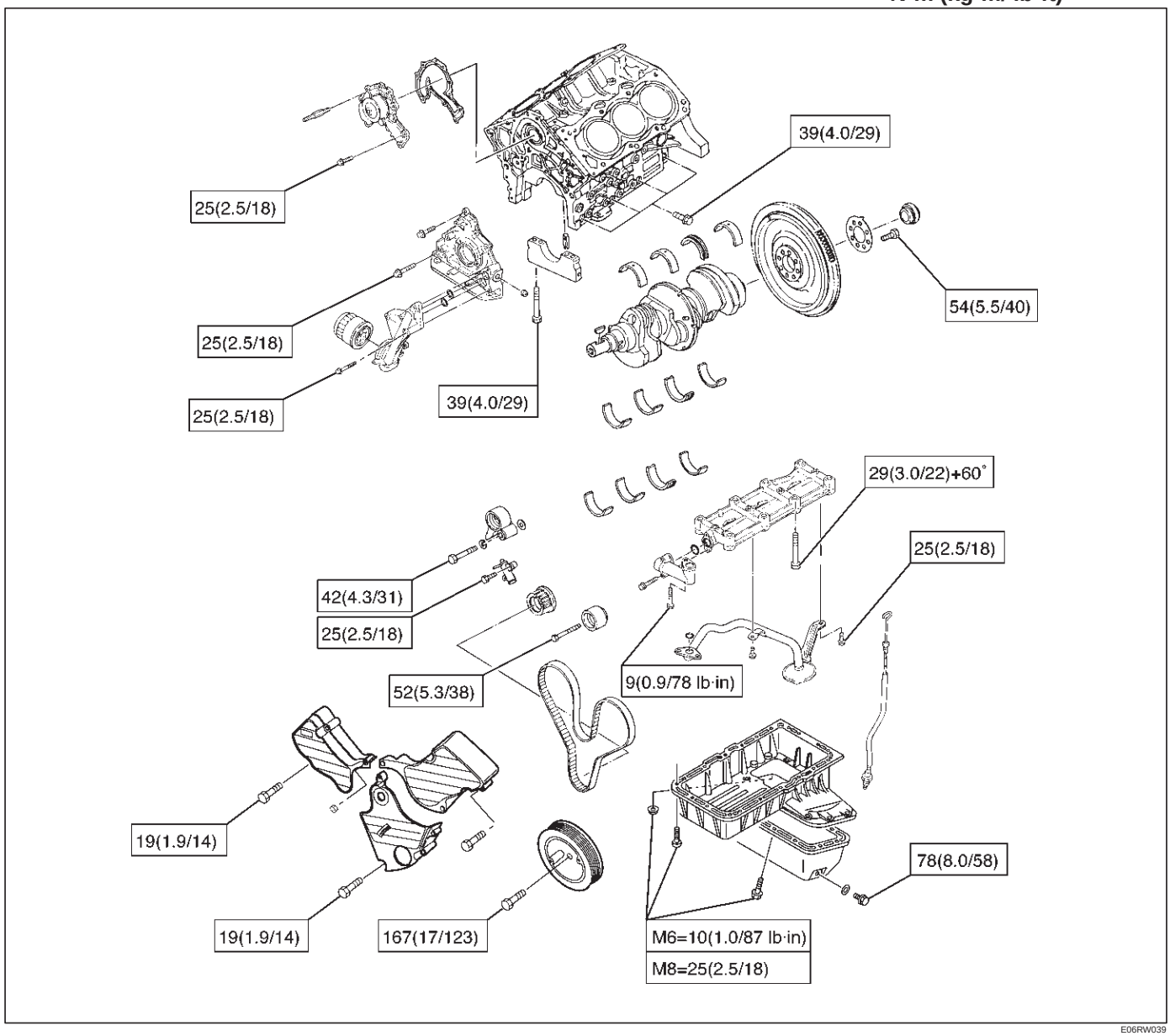

E06RW039

Connecting rod and Water pump

N·m (kg·m/ lb·ft)

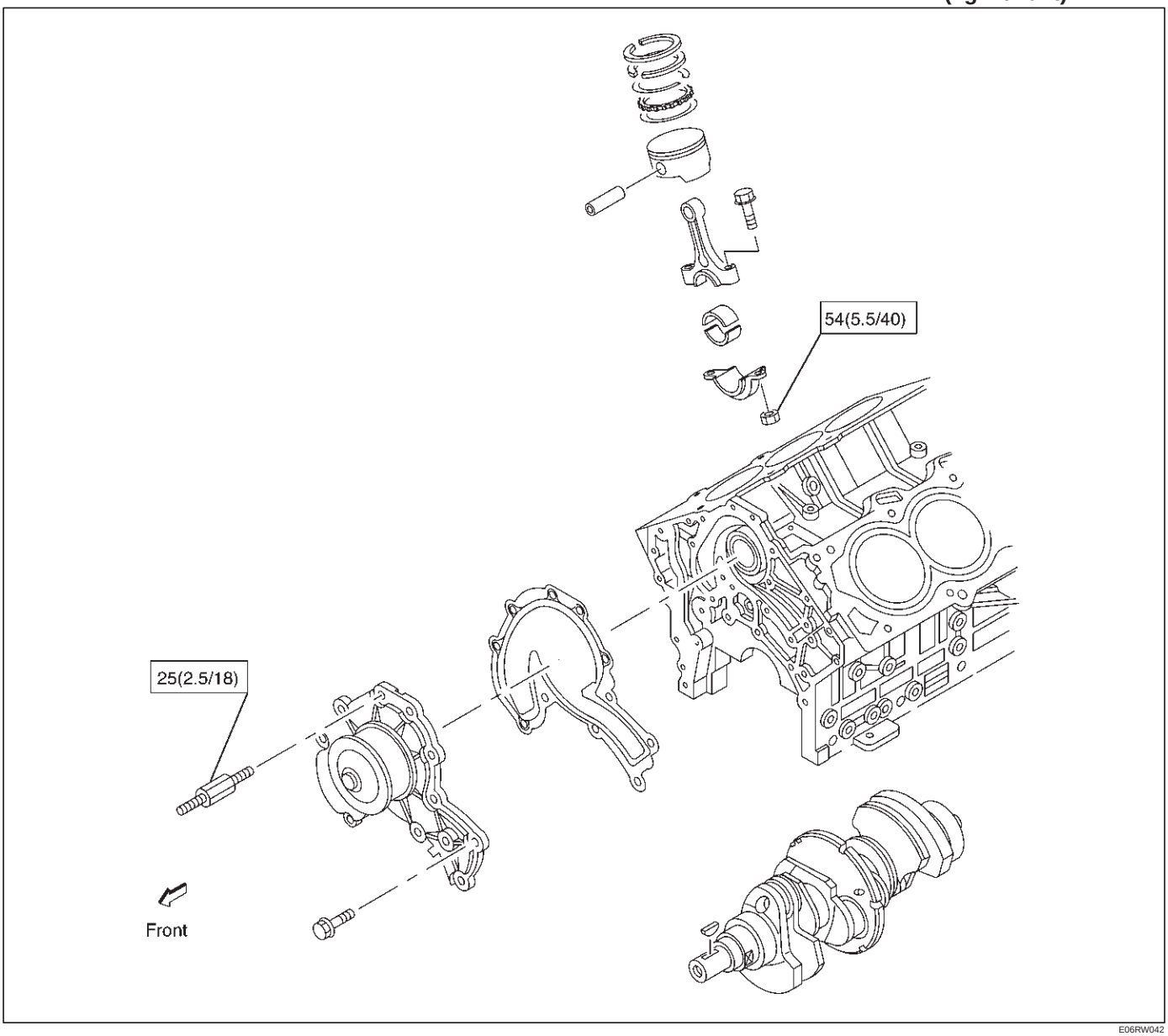

E06RW042

Engine mount

N·m (kg·m/ lb·ft)

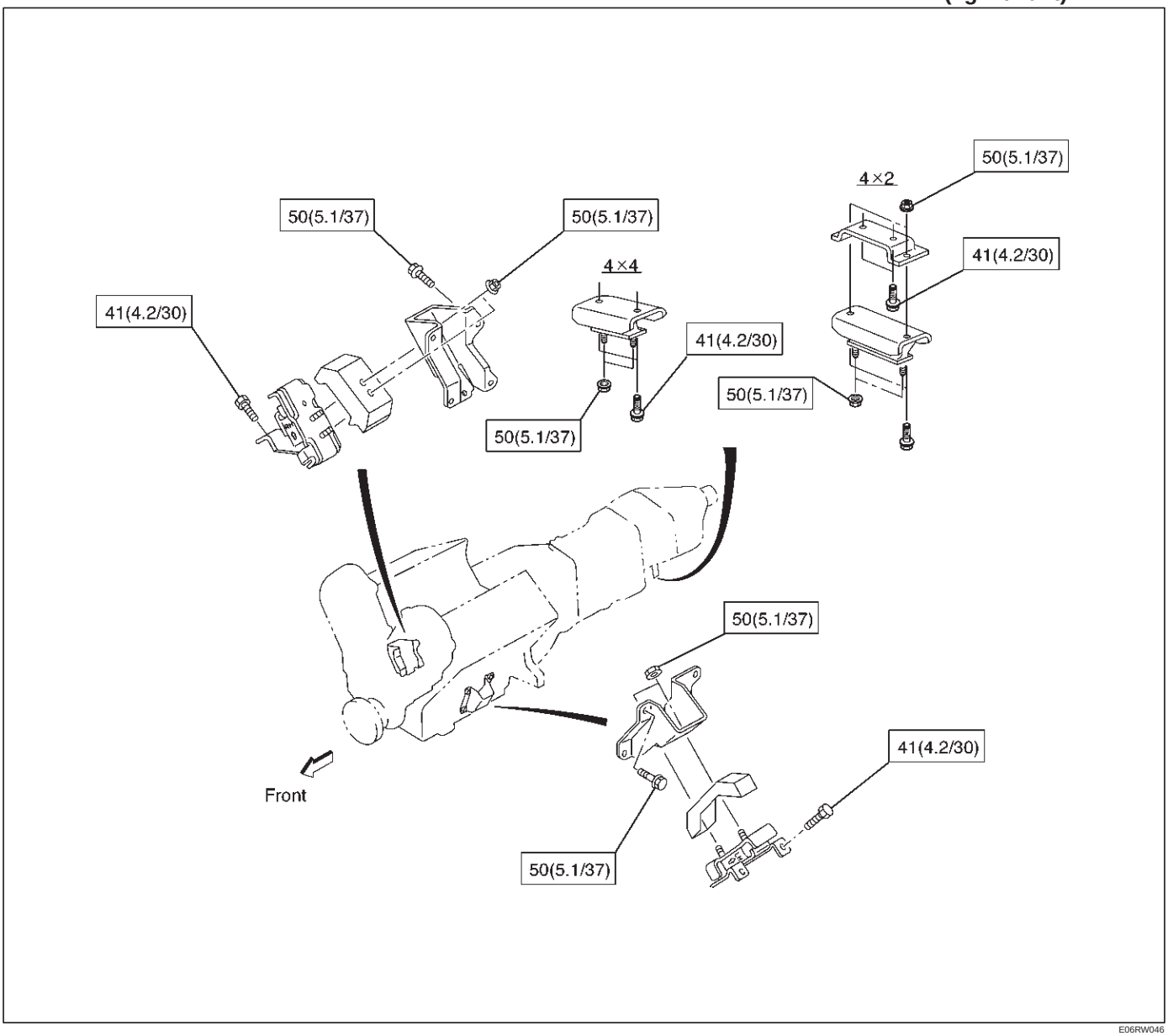

E06RW046

Special Tool

ILLUSTRATION	TOOL NO. TOOL NAME
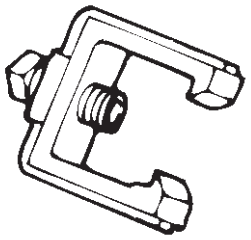 901RT033	**5–8840–0011–0** **(J–21687–02)** Remover; tie rod end
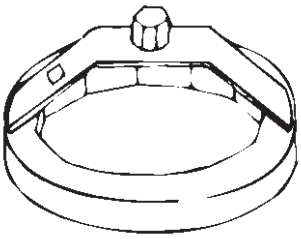 901RT034	**5–8840–0203–0** **(J–36390)** Wrench; Oil filter (79ϕ)
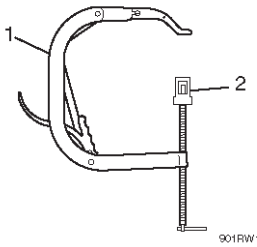 901RW108	**5–8840–2446–0** **(J–8062)** Compressor; Valve spring (1) **5–8840–2547–0** **(J–42898)** Adapter; Compressor, Valve spring (2)
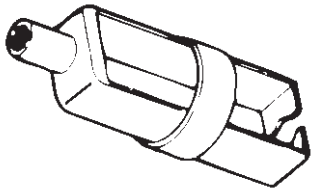 901RT036	**5–8840–0623–0** **(J–37281)** Remover; Oil controller
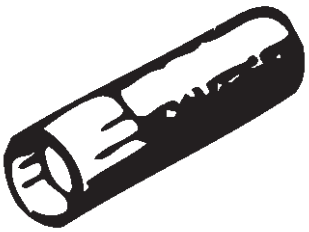 901RT037	**5–8840–0624–0** **(J–38537)** Installer; Oil controller
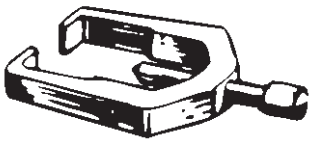 901RT038	**5–8840–2005–0** **(J–29107)** Universal pitman arm remover

ILLUSTRATION	TOOL NO. TOOL NAME
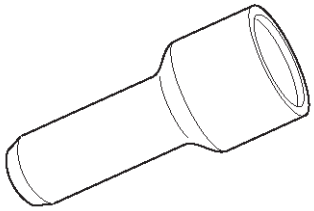 901RW171	**5–8840–2445–0** **(J–42985)** Installer; Camshaft oil seal
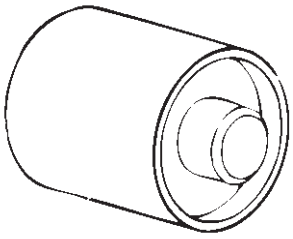 901RT040	**5–8840–2545–0** **(J–39206)** Installer; Pilot bearing
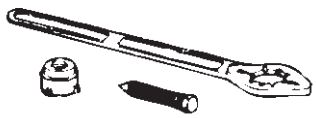 901RT041	**5–8840–0133–0** **(J–8614–01)** Holder; Crankshaft
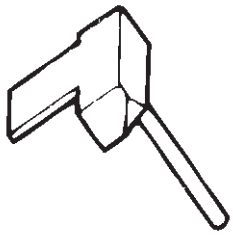 901RT042	**5–8840–2153–0** **(J–37228)** Seal cutter
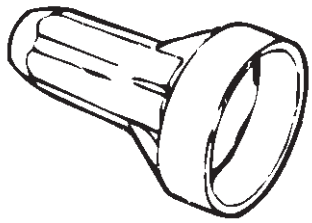 901RT043	**5–8840–2286–0** **(J–39201)** Installer; Real oil seal
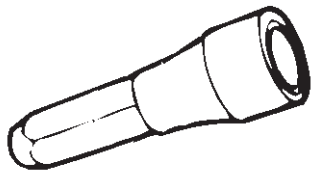 901RT044	**5–8840–2287–0** **(J–39202)** Installer; Oil pump oil seal

ILLUSTRATION	**TOOL NO.** TOOL NAME
	9–8511–4209–0 **(J–24239–1)** Cylinder head bolt wrench
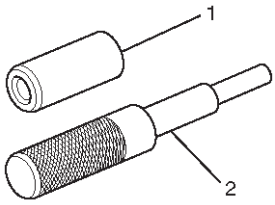	**5–8840–2442–0** **(J–42899)** Replacer; Valve guide (1,2) **5–8840–2548–0** **(J–42687)** Installer; Valve guide (1) **5–8840–2549–0** **(J–37985–1)** Remover; Valve guide (2)
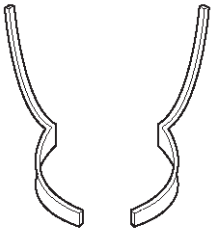	**5–8840–2444–0** **(J–42689)** Adjusting Tool; Valve clearance
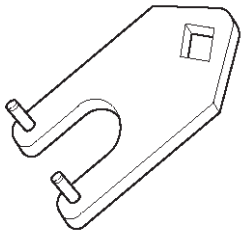	**5–8840–2443–0** **(J–42686)** Lever; Gear spring
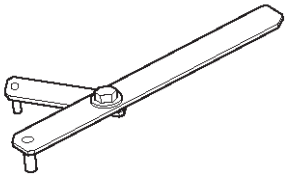	**5–8840–2447–1** **(J–43041)** Holder; Universal

ENGINE

ENGINE COOLING (6VD1 3.2L)

CONTENTS

Service Precaution 6B–1
General Description 6B–2
Diagnosis 6B–4
Draining and Refilling Cooling System 6B–5
Water Pump 6B–6
Water Pump and Associated Parts 6B–6
Removal 6B–6
Inspection 6B–6
Installation 6B–6
Thermostat 6B–7
Thermostat and Associated Parts 6B–7
Removal 6B–7
Inspection 6B–7
Installation 6B–7
Radiator 6B–8
Radiator and Associated Parts 6B–8
Removal 6B–8
Inspection 6B–9
Installation 6B–10
Drive Belt and Cooling Fan 6B–12
Drive Belt and Associated Parts 6B–12
Inspection 6B–12
Installation 6B–12
Main Data and Specifications 6B–13
Special Tool 6B–14

Service Precaution

WARNING: THIS VEHICLE HAS A SUPPLEMENTAL RESTRAINT SYSTEM (SRS). REFER TO THE SRS COMPONENT AND WIRING LOCATION VIEW IN ORDER TO DETERMINE WHETHER YOU ARE PERFORMING SERVICE ON OR NEAR THE SRS COMPONENTS OR THE SRS WIRING. WHEN YOU ARE PERFORMING SERVICE ON OR NEAR THE SRS COMPONENTS OR THE SRS WIRING, REFER TO THE SRS SERVICE INFORMATION. FAILURE TO FOLLOW WARNINGS COULD RESULT IN POSSIBLE AIR BAG DEPLOYMENT, PERSONAL INJURY, OR OTHERWISE UNNEEDED SRS SYSTEM REPAIRS.

CAUTION: Always use the correct fastener in the proper location. When you replace a fastener, use ONLY the exact part number for that application. ISUZU will call out those fasteners that require a replacement after removal. ISUZU will also call out the fasteners that require thread lockers or thread sealant. UNLESS OTHERWISE SPECIFIED, do not use supplemental coatings (Paints, greases, or other corrosion inhibitors) on threaded fasteners or fastener joint interfaces. Generally, such coatings adversely affect the fastener torque and the joint clamping force, and may damage the fastener. When you install fasteners, use the correct tightening sequence and specifications. Following these instructions can help you avoid damage to parts and systems.

General Description

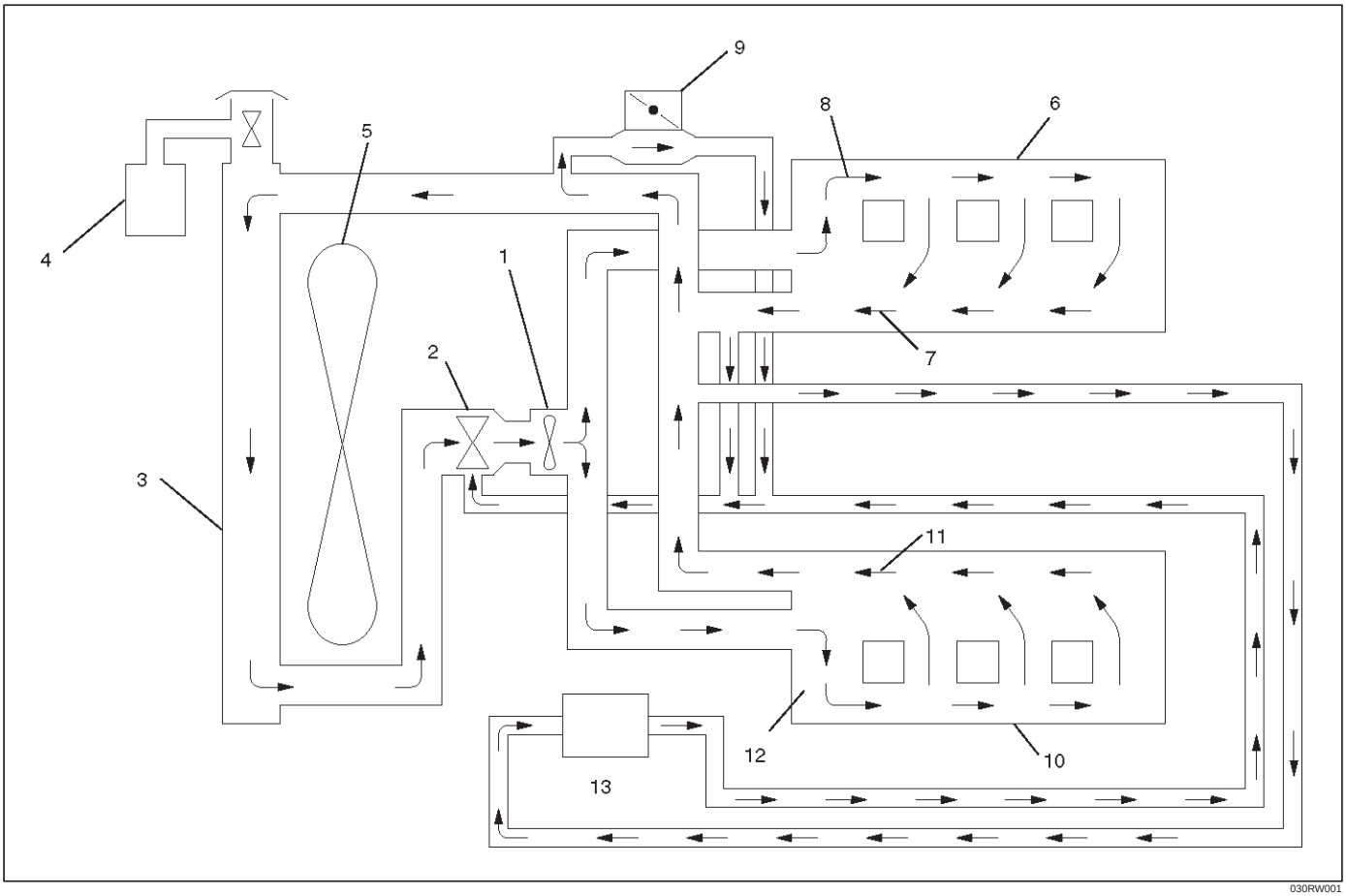

030RW001

Legend

(1) Water Pump
(2) Thermostat
(3) Radiator
(4) Reserve Tank
(5) Cooling Fan
(6) Cylinder Block
(7) Cylinder Head
(8) Right Bank
(9) Throttle Body
(10) Cylinder Block
(11) Cylinder Head
(12) Left Bank
(13) Heater

The cooling system is a pressurized Engine Coolant (EC) forced circulation type which consists of a water pump, thermostat cooling fan, radiator and other components. The automatic transmission fluid is cooled by the EC in radiator.

Water Pump

The EC pump is a centrifugal impeller type and is driven by a timing belt.

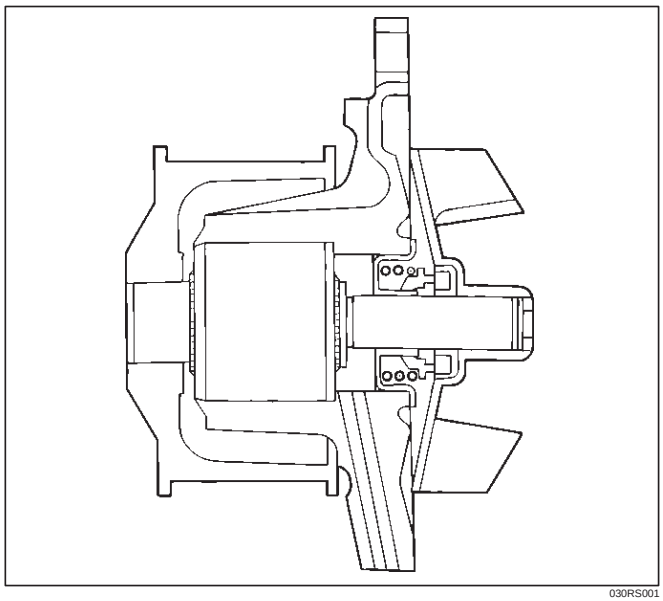

030RS001

Thermostat

The thermostat is a wax pellet type with a air hole(1) and is installed in the thermostat housing.

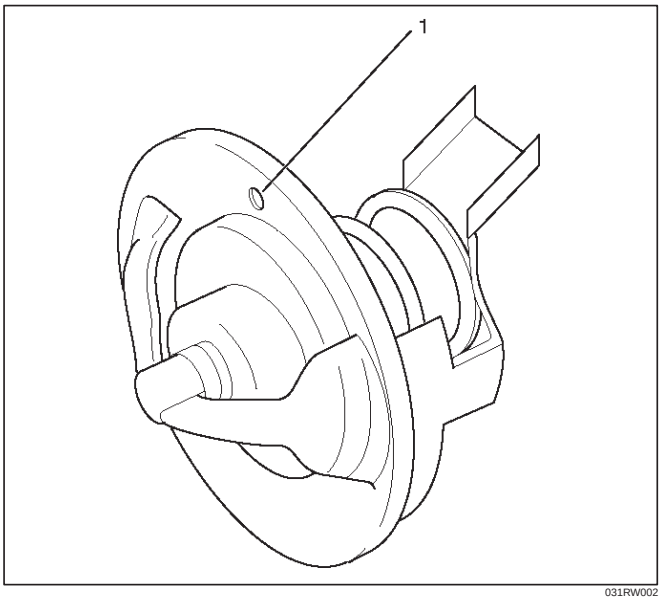

031RW002

Radiator

The radiator is a tube type with corrugated fins. In order to raise the boiling point of the coolant, the radiator is fitted with a cap in which the valve is operated at 88.2 ~ 117.6 kPa (12.8 ~ 17.0 psi) pressure. (No oil cooler provided for M/T)

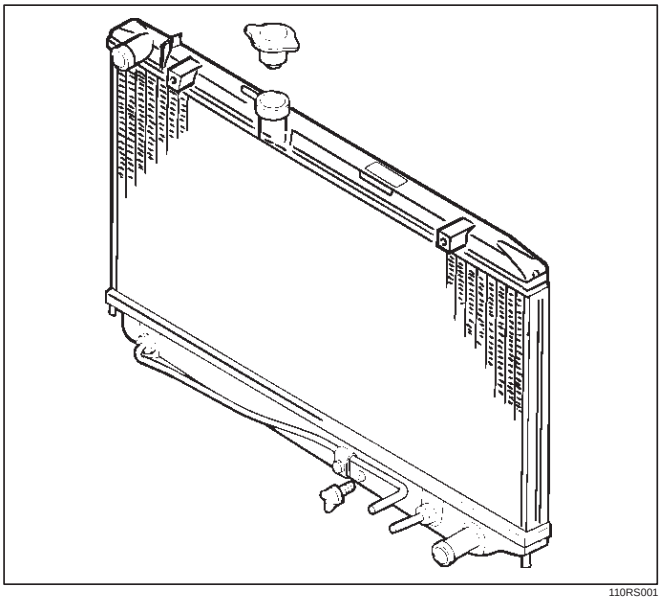

110RS001

Antifreeze Solution

- Relation between the mixing ratio and freezing temperature of the EC varies with the ratio of anti–freeze solution in water. Proper mixing ratio can be determined by referring to the chart. Supplemental inhibitors or additives claiming to increase cooling capability that have not been specifically approved by Isuzu are not recommended for addition to the cooling system.
- Calculating mixing ratio

$$\text{Mixing ratio} = \frac{\text{Antifreeze solution (Lit/gal.)}}{\text{Antifreeze solution (Lit/gal.)} + \text{Water (Lit/gal.)}}$$

F06RW005

NOTE: Antifreeze solution + Water = Total cooling system capacity.

- **Total Cooling System Capacity**
- **M/T 8.8Lit (2.32Us gal)**
- **A/T 8.4Lit (2.22Us gal)**

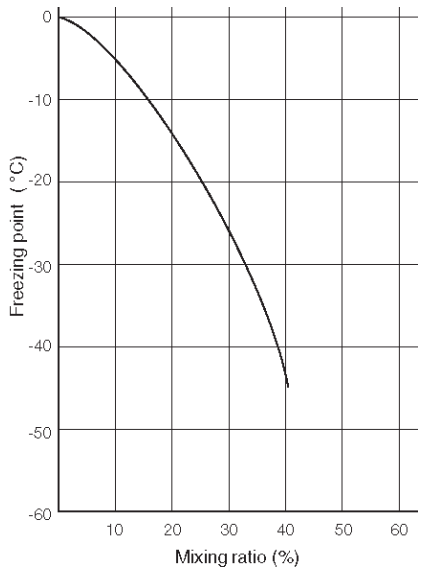

B06RW002

- Mixing ratio
  Check the specific gravity of engine coolant in the cooling system temperature ranges from 0˚C to 50˚C using a suction type hydrometer, then determine the density of the engine coolant by referring to the table.

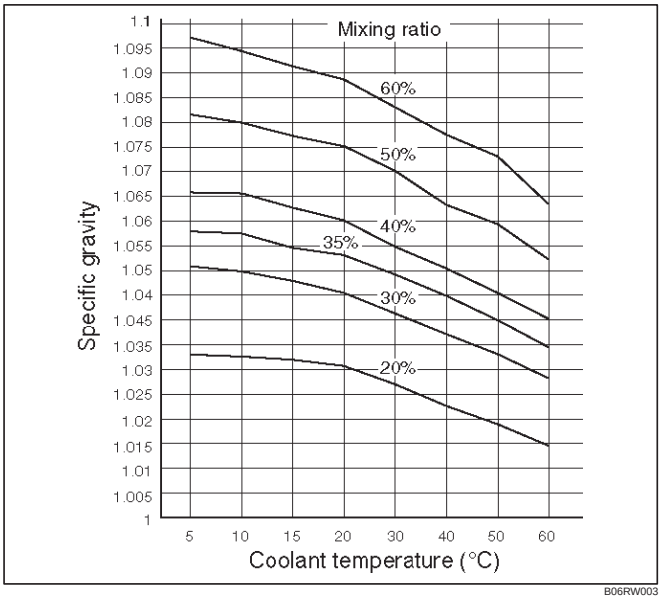

Diagnosis

Engine Cooling Trouble

Condition	Possible cause	Correction
Engine overheating	Low Engine Coolant level	Replenish
	Thermo meter unit faulty	Replace
	Faulty thermostat	Replace
	Faulty Engine Coolant temperature sensor	Repair or replace
	Clogged radiator	Clean or replace
	Faulty radiator cap	Replace
	Low engine oil level or use of improper engine oil	Replenish or change oil
	Clogged exhaust system	Clean exhaust system or replace faulty parts
	Faulty Throttle Position sensor	Replace throttle valve assembly
	Open or shorted Throttle Position sensor circuit	Repair or replace
	Damaged cylinder head gasket	Replace
Engine overcooling	Faulty thermostat	Replace
Engine slow to warm–up	Faulty thermostat	Replace
	Thermo unit faulty	Replace

Draining and Refilling Cooling System

Before draining the cooling system, inspect the system and perform any necessary service to ensure that it is clean, does not leak and is in proper working order. The engine coolant (EC) level should be between the “MIN” and “MAX” lines of reserve tank when the engine is cold. If low, check for leakage and add EC up to the “MAX” line. There should not be any excessive deposit of rust or scales around the radiator cap or radiator filler hole, and the EC should also be free from oil.
Replace the EC if excessively dirty.

1. Completely drain the cooling system by opening the drain plug (2) at the bottom of the radiator.

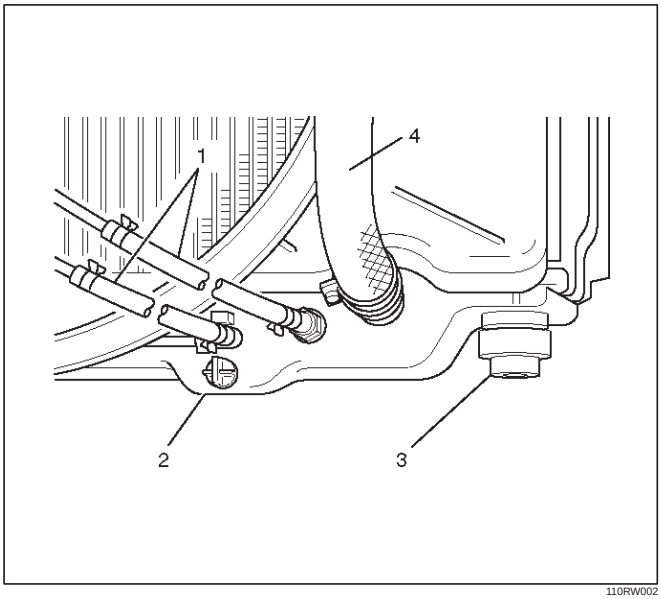

110RW002

2. Remove the radiator cap.

WARNING: TO AVOID THE DANGER OF BEING BURNED, DO NOT REMOVE THE CAP WHILE THE ENGINE AND RADIATOR ARE STILL HOT. SCALDING FLUID AND STEAM CAN BE BLOWN OUT UNDER PRESSURE.

3. Disconnect all hoses from the EC reserve tank.
   Scrub and clean the inside of the reserve tank with soap and water. Flush it well with clean water, then drain it. Install the reserve tank and hoses.
4. Refill the cooling system with the EC using a solution that is at least 50 percent antifreeze but no more than 70 percent antifreeze.

Procedure for filling with coolant (in case of full change)

- Make sure that the engine is cool.
- Open radiator cap pour coolant up to filler neck.
- Pour coolant into reservoir tank up to “MAX” line.
- Tighten radiator cap and start the engine. After idling for 2 to 3 minutes, stop the engine and reopen radiator cap. If the water level is lower, replenish.

WARNING: WHEN THE COOLANT IS HEATED TO A HIGH TEMPERATURE, BE SURE NOT TO LOOSEN OR REMOVE THE RADIATOR CAP. OTHERWISE YOU MIGHT GET SCALDED BY NOT VAPOR OR BOILING WATER. TO OPEN THE RADIATOR CAP, PUT A PIECE OF THICK CLOTH ON THE CAP AND LOOSEN THE CAP SLOWLY TO REDUCE THE PRESSURE WHEN THE COOLANT HAS BECOME COOLER.

- After tightening radiator cap, warm up the engine at about 2000 rpm. Set heater adjustment to the highest temperature position, and let the coolant circulate also into heater water system.
- Check to see the thermostat has opened through the needle position of water thermometer, conduct a 5–minute idling again and stop the engine.
- When the engine has been cooled, check filler neck for water level and replenish if required. Should extreme shortage of coolant is found, check the cooling system and reservoir tank hose for leakage.
- Pour coolant into the reservoir tank up to “MAX” line.

Water Pump

Water Pump and Associated Parts

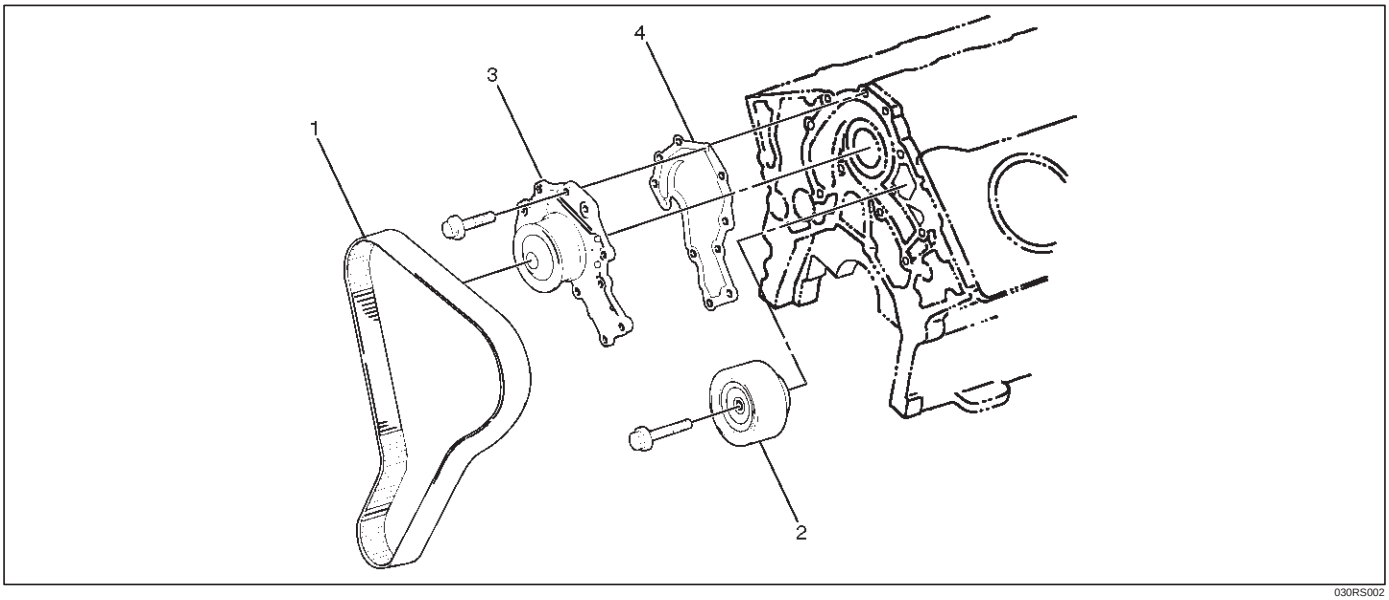

030RS002

Legend
(1) Timing Belt
(2) Idle Pulley
(3) Water Pump Assembly
(4) Gasket

Removal

1. Disconnect battery ground cable.
2. Drain coolant.
3. Radiator hose (on inlet pipe side).
4. Remove timing belt. Refer to “Timing Belt” in this manual.
5. Remove Idle pulley.
6. Remove water pump assembly.
7. Remove gasket.

Inspection

Make necessary repair and parts replacement if extreme wear or damage is found during inspection. Should any of the following problems occur, the entire water pump assembly must be replaced:

- Crack in the water pump body
- EC leakage from the seal unit
- Play or abnormal noise in the bearing
- Cracks or corrosion in the impeller.

Installation

1. Install gasket, clean the mating surface of gasket before installation.
2. Install water pump assembly and tighten bolts to the specified torque.

   Torque: 25 N·m (2.5 kg·m/18 lb ft)

   - Tightening order
     The tightening order are in the illustrate.

NOTE: To prevent the oil leakage, apply the LOCTITE 262 or an equivalent, to the arrow marked fixing bolt thread.

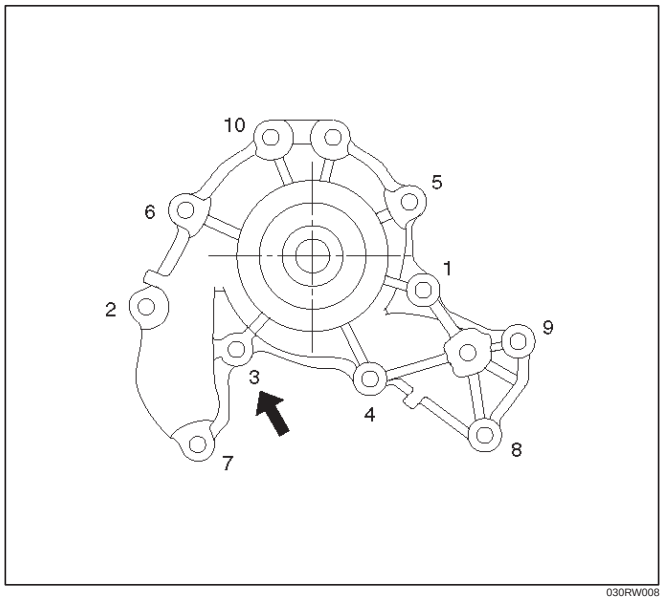

030RW008

3. Idle pulley
   - Install idle pulley and tighten bolt to the specified torque.

   Torque: 52 N·m (5.3 kg·m/38 lb ft)

4. Timing belt
   - Install timing belt. Refer to timing belt installation step in “Timing Belt” in this manual.
5. Connect radiator inlet hose and replenish EC.
6. Connect battery ground cable.

Thermostat

Thermostat and Associated Parts

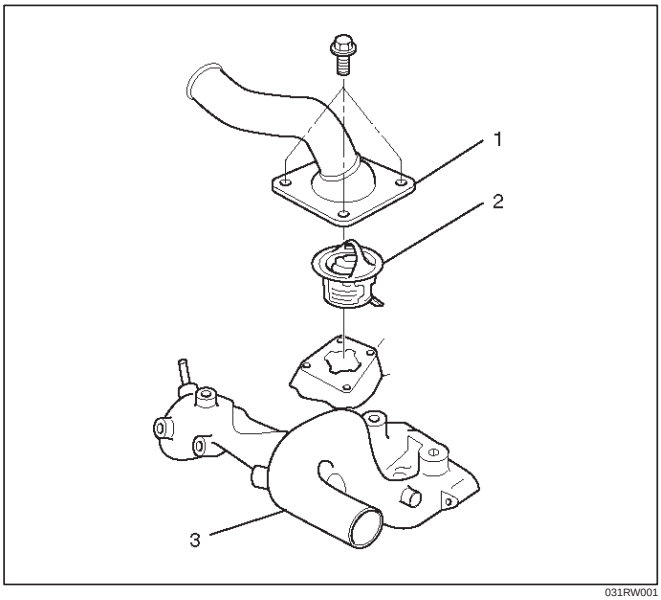

031RW001

Legend

(1) Thermostat Housing
(2) Thermostat
(3) Outlet Pipe

Removal

1. Disconnect battery ground cable.
2. Drain engine coolant from the radiator and engine.
3. Disconnect radiator hose from the inlet pipe.
4. Remove thermostat housing.
5. Remove thermostat(2).

Inspection

Suspend the thermostat in a water–filled container using thin wire. Place a thermometer next to the thermostat. Do not directly heat the thermostat.
Gradually increase the water temperature. Stir the water so that the entire water is same temperature.

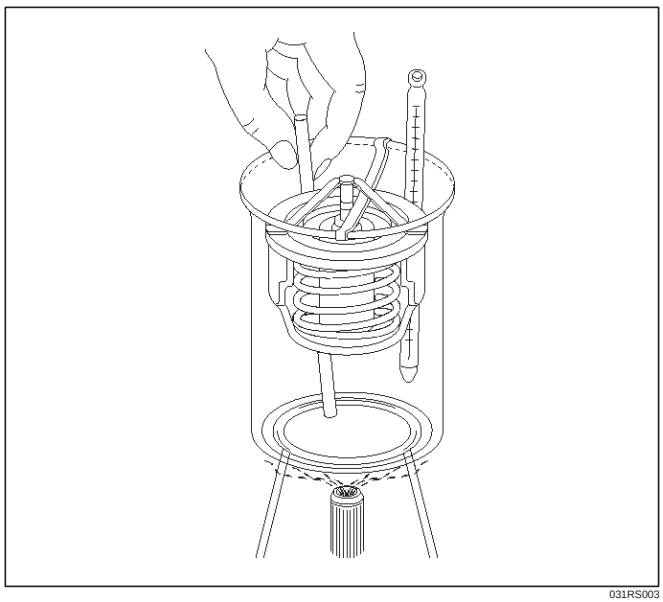

031RS003

Confirm the temperature when the valve first begins to open.

Valve opening temperature 74.5C ~ 78.5˚C (166.1˚F ~ 173.3˚F)

Confirm the temperature when the valve is fully opened.

Valve full open temperature and lift More than 8.5mm (0.33 in) at 90˚C (194˚F)

Make necessary repair and parts replacement if extreme wear or damage is found during inspection.

Installation

1. Install thermostat into the outlet pipe(4) making sure that the air hole is in the up position.
2. Install thermostat housing and tighten bolts to the specified torque.

   Torque: 25 N·m (2.5 kg·m/18 lb ft)

3. Installation rubber hose.
4. Replenish engine coolant (EC).
5. Start engine and check for EC leakage.

Radiator

Radiator and Associated Parts

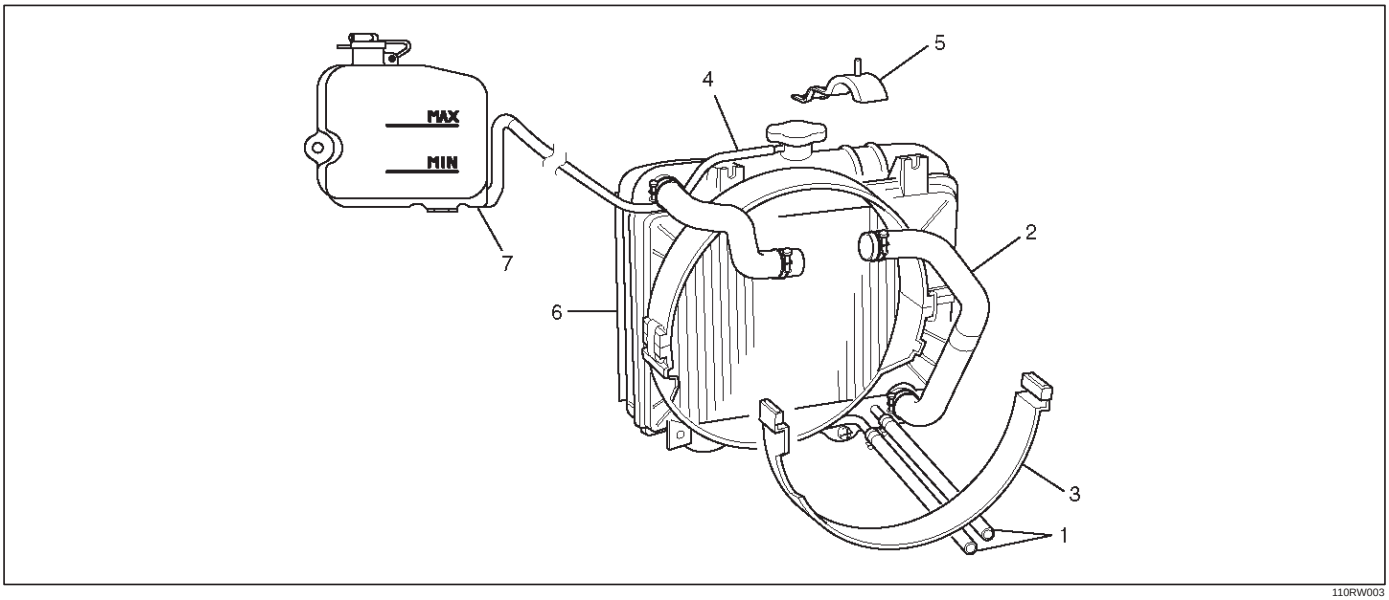

110RW003

Legend

(1) Oil Cooler Hose For Automatic Transmission
(2) Radiator Hose
(3) Fan Guide, Lower
(4) Reserve Tank Hose
(5) Bracket
(6) Radiator Assembly
(7) Reserve Tank

Removal

1. Disconnect battery ground cable.
2. Loosen a drain plug(2) to drain EC.
3. Disconnect oil cooler hose(1) on automatic transmission (A/T).
4. Disconnect radiator inlet hose and outlet hose from the engine.

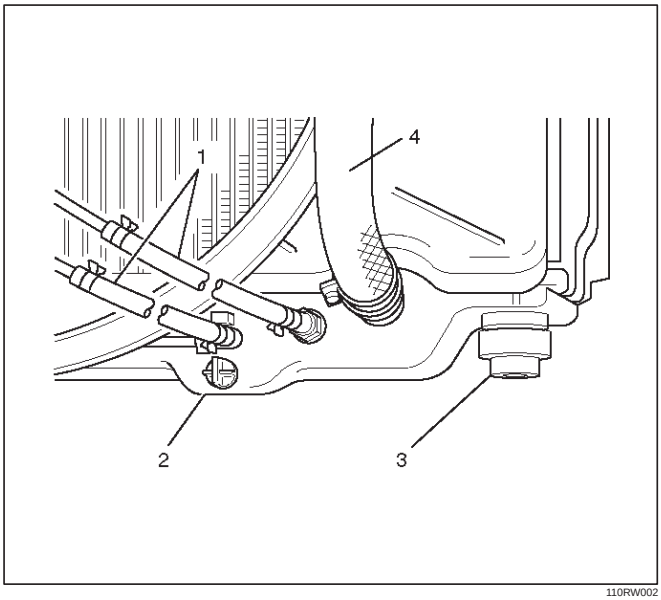

110RW002

5. Remove fan guide(1), clips(3) on both sides and the bottom lock, then remove lower fan guide(3) with fan shroud(4).

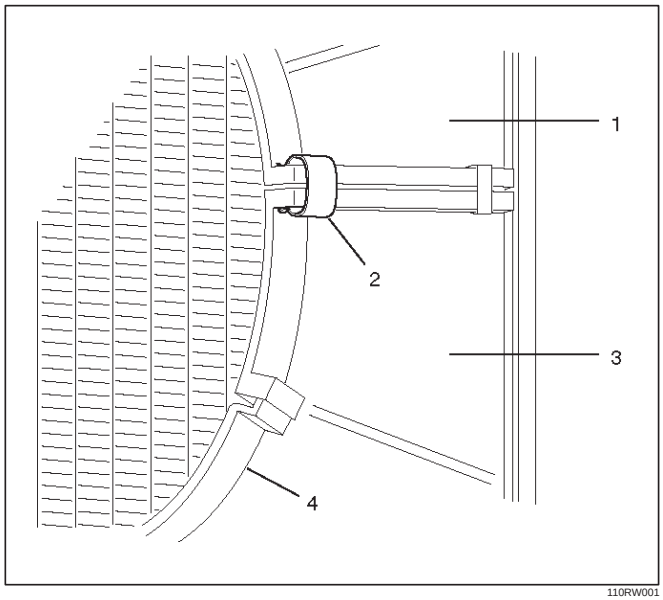

110RW001

6. Disconnect the reserve tank hose(4) from radiator.
7. Remove bracket(5).

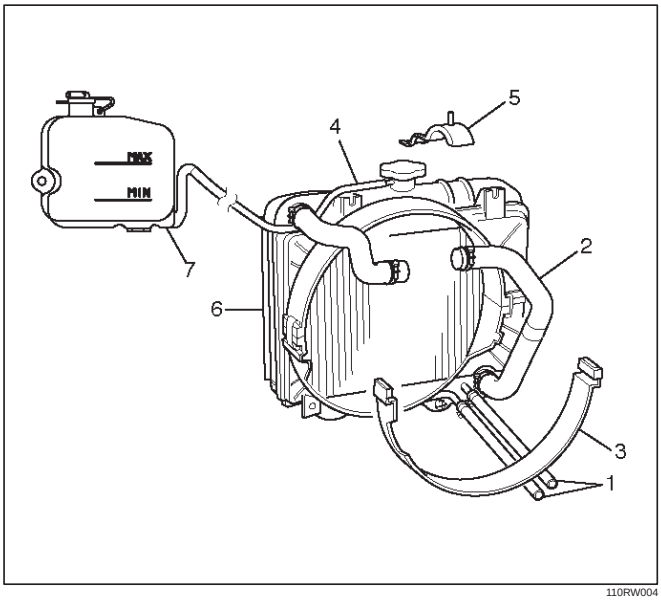

110RW004

8. Lift up and remove the radiator assembly with hose, taking care not to damage the radiator core with a fan blade.
9. Remove rubber cushions on both sides at the bottom.

Inspection

Radiator Cap

Measure the valve opening pressure of the pressurizing valve with a radiator filler cap tester.
Replace the cap if the valve opening pressure is outside the standard range.

Valve opening pressure kPa (psi) 88.3 ~ 117.7 (12.8 ~17.1)

Cap tester: 5–8840–0277–0
Adapter: 5–8840–2603–0
Check the condition of the vacuum valve in the center of the valve seat side of the cap. If considerable rust or dirt is found, or if the valve seat cannot be moved by hand, clean or replace the cap.

Valve opening vacuum kPa (psi) 1.96 ~ 4.91 (0.28 ~ 0.71)

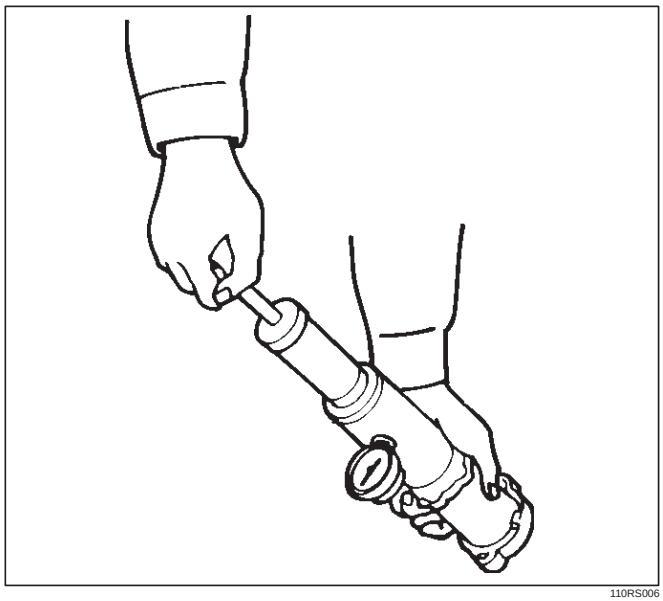
110RS006

Radiator Core

1. A bent fin may result in reduced ventilation and overheating may occur. All bent fins must be straightened. Pay close attention to the base of the fin when it is being straightened.
2. Remove all dust, bugs and other foreign material.

Flushing the Radiator

Thoroughly wash the inside of the radiator and the engine coolant passages with cold water and mild detergent. Remove all signs of scale and rust.

Cooling System Leakage Check

Use a radiator cap tester to force air into the radiator through the filler neck at the specified pressure of 196 kPa (28.5 psi) with a cap tester:

- Leakage from the radiator
- Leakage from the coolant pump
- Leakage from the water hoses
- Check the rubber hoses for swelling.

Cap tester: 5–8840–0277–0
Adapter: 5–8840–2603–0

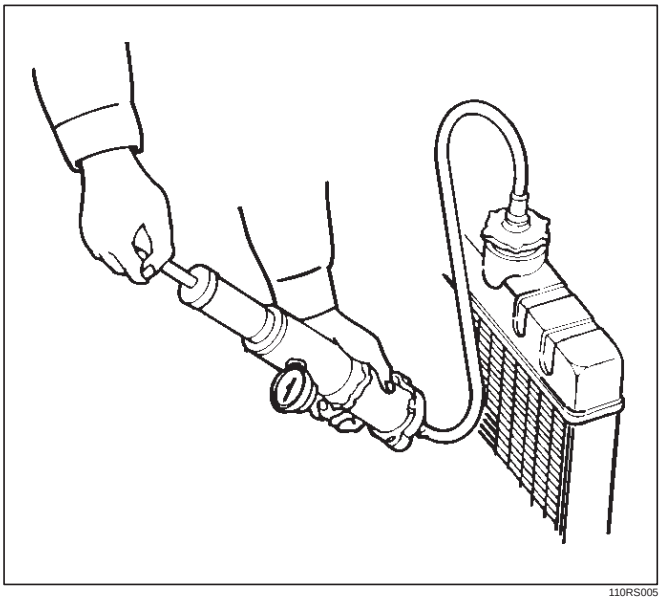

110RS005

Installation

1. Install rubber cushions on both sides of radiator bottom.
2. Install radiator assembly with hose, taking care not to damage the radiator core with a fan blade.
3. Install bracket (6) and support the radiator upper tank with the bracket (5) and secure the radiator.
4. Connect reserve tank hose (4).
5. Install lower fan guide (3).
6. Connect radiator inlet hose and outlet hose to the engine.
7. Connect oil cooler hose (1) to automatic transmission.

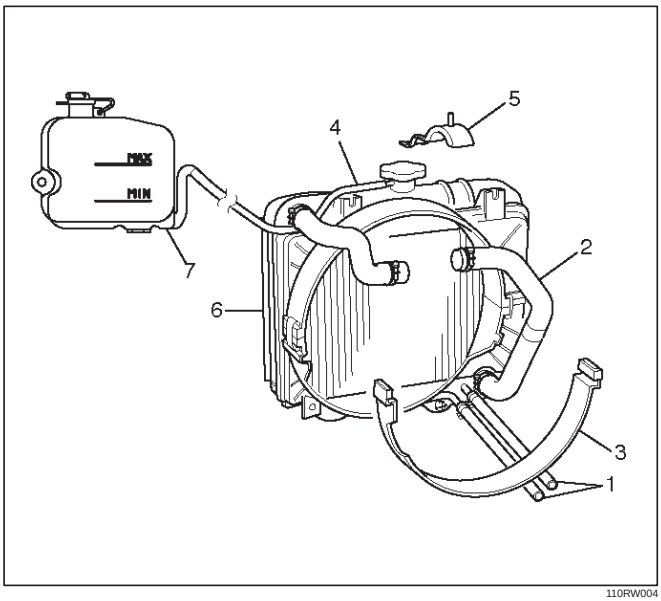

110RW004

8. Connect battery ground cable.
9. Pour engine coolant up to filler neck of radiator, and up to MAX mark of reserve tank.

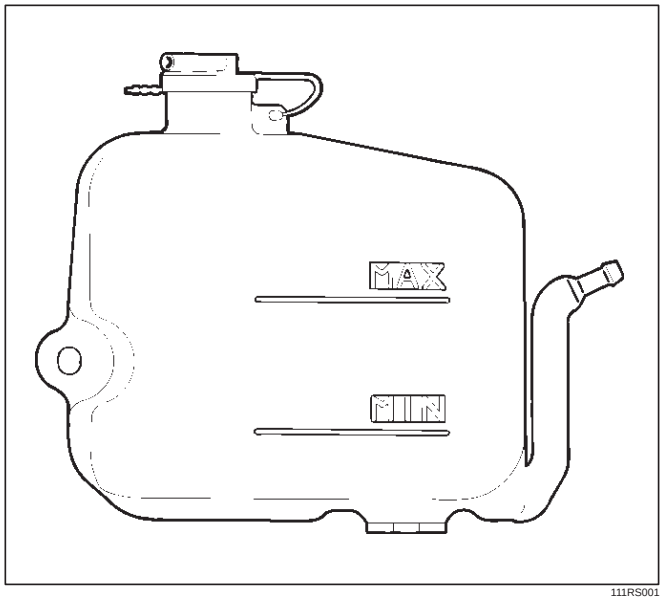

111RS001

Important operation (in case of 100% engine coolant change) procedure for filling with engine coolant.

Engine coolant change

1. To change engine coolant, make sure that the engine is cool.

WARNING: WHEN THE COOLANT IS HEATED TO A HIGH TEMPERATURE, BE SURE NOT TO LOOSEN OR REMOVE THE RADIATOR CAP. OTHERWISE YOU MIGHT GET SCALDED BY HOT VAPOR OR BOILING WATER. TO OPEN THE RADIATOR CAP, PUT A PIECE OF THICK CLOTH ON THE CAP AND LOOSEN THE CAP SLOWLY TO REDUCE THE PRESSURE WHEN THE COOLANT HAS BECOME COOLER.

2. Open radiator cap and drain the cooling system by loosening the drain valve on the radiator and on the cylinder body.

NOTE: For best result it is suggested that the engine cooling system be flushed at least once a year. It is advisable to flash the interior of the cooling system including the radiator before using anti-freeze (ethylene-glycol based).

Replace damaged rubber hoses as the engine anti-freeze coolant is liable to leak out even minor cracks.

Isuzu recommends to use Isuzu genuine anti-freeze (ethylen-glycol based) or equivalent, for the cooling system and not add any inhibitors or additives.

CAUTION: A failure to correctly fill the engine cooling system in changing or topping up coolant may sometimes cause the coolant to overflow from the filler neck even before the engine and radiator are completely full.

If the engine runs under this condition, shortage of coolant may possibly result in engine overheating. To avoid such trouble, the following precautions should be taken in filling the system.

3. To refill engine coolant, pour coolant up to filler neck using a filling hose which is smaller in outside diameter of the filler neck. Otherwise air between the filler neck and the filling hose will block entry, preventing the system from completely filling up.
4. Keep a filling rate of 9 liter/min. or less. Filling over this maximum rate may force air inside the engine and radiator.

   And also, the coolant overflow will increase, making it difficult to determine whether or not the system is completely full.
5. After filling the system to the full, pull out the filling hose and check to see if air trapped in the system is disclodged and the coolant level goes down. Should the coolant level go down, repeat topping-up until there is no more drop in the coolant level.
6. After directly filling the radiator, fill the reservoir to the maximum level.
7. Install and tighten radiator cap and start the engine. After idling for 2 to 3 minutes, stop the engine and reopen radiator cap. If the water level is lower, replenish.

WARNING: WHEN THE COOLANT IS HEATED TO A HIGH TEMPERATURE, BE SURE NOT TO LOOSEN OR REMOVE THE RADIATOR CAP. OTHERWISE YOU MIGHT GET SCALDED BY HOT VAPOR OR BOILING WATER. TO OPEN THE RADIATOR CAP, PUT A PIECE OF THICK CLOTH ON THE CAP AND LOOSEN THE CAP SLOWLY TO REDUCE THE PRESSURE WHEN THE COOLANT HAS BECOME COOLER.

8. After tightening radiator cap, warm up the engine at about 2,000 rpm.

   Set heater adjustment to the highest temperature position, and let the coolant circulate also into heater water system.
9. Check to see the thermostat has opened through the needle position of water thermometer, conduct a 5-minute idling again and stop the engine.
10. When the engine has been cooled, check filler neck for water level and replenish if required. Should extreme shortage of coolant is found, check the coolant system and reservoir tank hose for leakage.
11. Fill the coolant into the reservoir tank up to “MAX” line.

Drive Belt and Cooling Fan

Drive Belt and Associated Parts

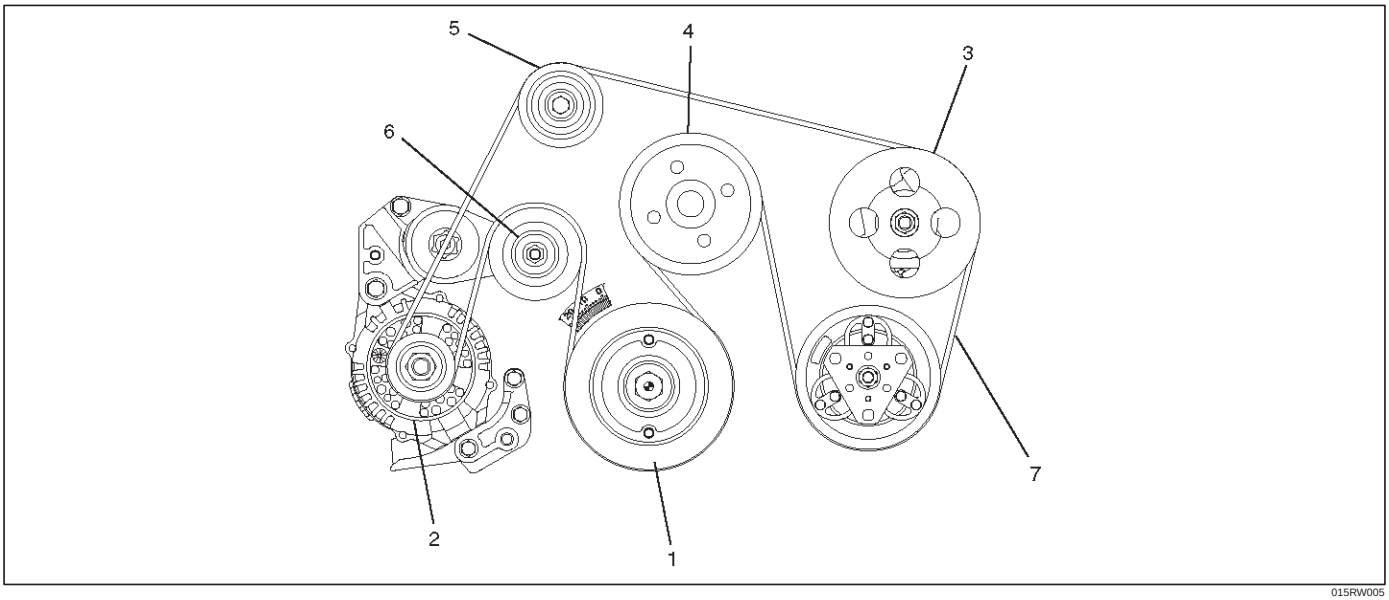

015RW005

Legend

(1) Crankshaft Pulley
(2) Generator
(3) Power Steering Pump
(4) Water Pump and Cooling Fan Pulley
(5) Idle Pulley
(6) Tension Pulley
(7) Drive Belt

The drive belt adjustment is not required as automatic drive belt tensioner is equipped.

Inspection

Check drive belt for wear or damage, and replace with a new one as necessary.

Installation

Install cooling fan assembly and tighten bolts/nuts to the specified torque.

Torque : 22 N·m (2.2 kg·m/16 lb ft) for fan pulley and fan bracket.

Torque : 10 N·m (1.0 kg·m/88.5 lb in) for fan and clutch assembly.

NOTE: Fan belts for 6VE1 Gasoline Engine mounted on 98MY (UX) have been brought into one. As a result, the rotating direction of a fan belt is opposite to the direction of cooling fan for 92 to 97MY 6VD1 with no interchangeability.

Therefore, incorrect installation of a fan may cause the air for cooling to flow in the opposite direction, this resulting in the poor performance of the air-conditioner and a rise temperature in engine cooling water.

Main Data and Specifications

General Specifications

	M/T	A/T
Cooling system	Engine coolant forced circulation	
Radiator	(1 tube in row) Tube type corrugated (2 tube in row)	
Heat radiation capacity	68,000 kcal/h	77,000 kcal/h
Heat radiation area	9.445m^2 (0.878ft^2)	11.21m^2 (1.04ft^2)
Radiator front area	0.302m^2 (0.028ft^2)	
Radiator dry weight	39N (8.8lb)	44N (9.9lb)
Radiator cap valve opening pressure	93.3 ~ 122.7kpa (13.5 ~ 17.8psi)	
Engine coolant capacity	2.5lit (2.6U.S q.t.)	2.4lit (16.3U.S q.t.)
Engine coolant pump	Centrifugal impeller type	
Delivery	300 (317) or more	
Pump speed	5000 ± 50 rpm	
Thermostat	Wax pellet type with air hole	
Valve opening temperature	74.5 ~ 78.5˚C (166.1 ~ 173.3˚F)	
Engine coolant total capacity	10.4lit (11.0U.S qt)	10.5lit (11.1U.S qt)

Torque Specifications

N·m (kg·m/ lb·ft)

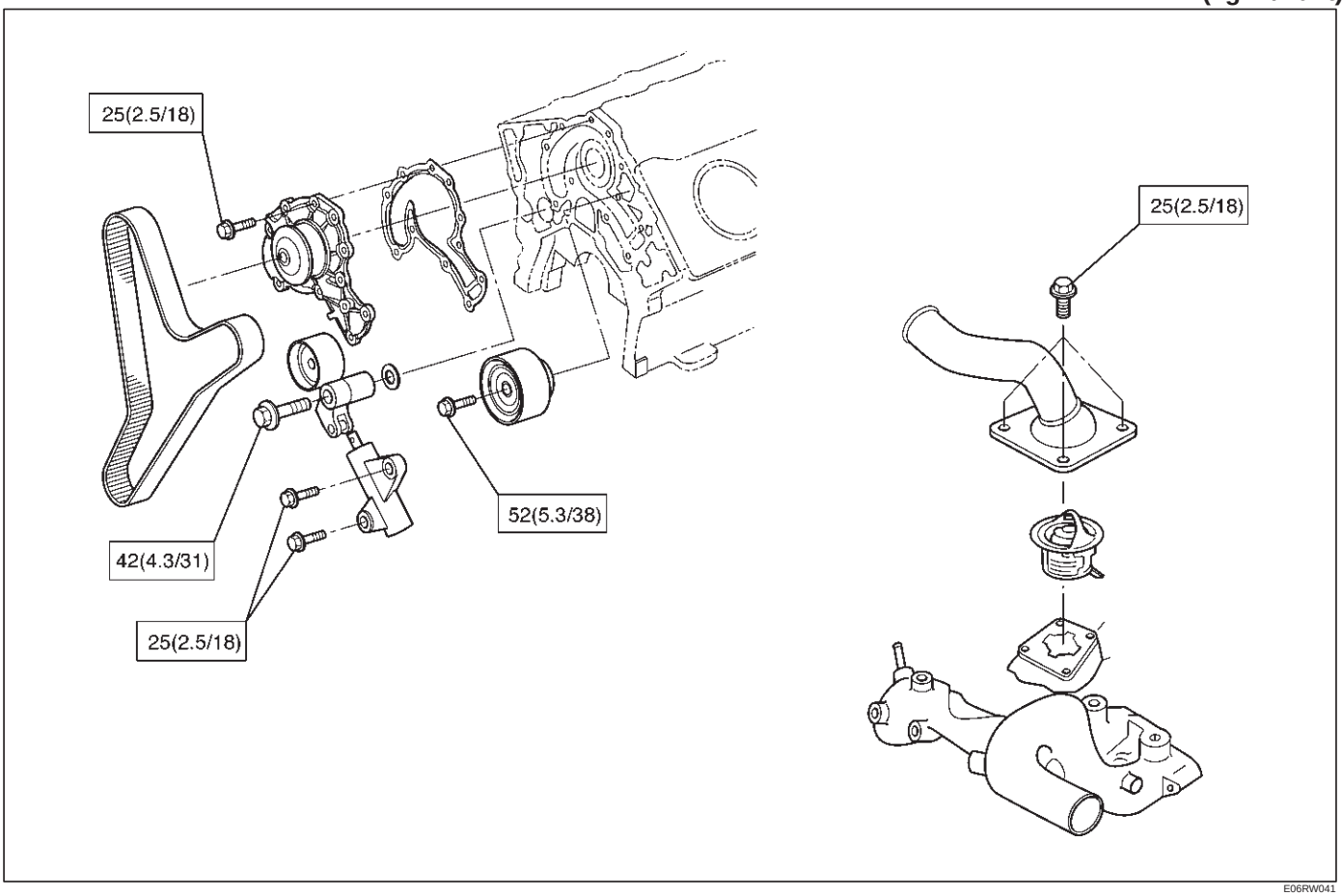

E06RW041

Special Tool

ILLUSTRATION	**TOOL NO.** TOOL NAME
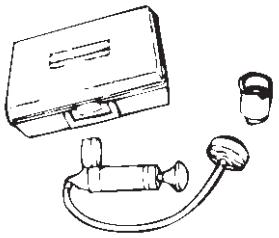	**5–8840–0277–0** **(J–24460–01)** Tester; radiator cap
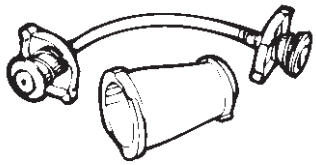	**5–8840–2603–0** **(J–33984–A)** Adapter; radiator cap

ENGINE

ENGINE FUEL

CONTENTS

Service Precaution 6C–1
General Description 6C–2
Fuel Metering 6C–3
Fuel Filter 6C–4
Removal 6C–4
Inspection 6C–4
Installation 6C–4
Inspection 6C–4
In–Tank Fuel Filter 6C–4
Fuel Pump Flow Test 6C–4
Fuel Pump 6C–5
Fuel Pump and Associated Parts 6C–5
Removal 6C–5
Installation 6C–5
Fuel Pump Relay 6C–6
General Description 6C–6
Fuel Tank 6C–6
Fuel Tank and Associated Parts 6C–6
Removal 6C–6
Installation 6C–7
Fuel Gauge Unit 6C–7
Removal and Installation 6C–7
Fuel Filler Cap 6C–7
General Description 6C–7
Inspection 6C–7
Main Data and Specifications 6C–8

Service Precaution

WARNING: THIS VEHICLE HAS A SUPPLEMENTAL RESTRAINT SYSTEM (SRS). REFER TO THE SRS COMPONENT AND WIRING LOCATION VIEW IN ORDER TO DETERMINE WHETHER YOU ARE PERFORMING SERVICE ON OR NEAR THE SRS COMPONENTS OR THE SRS WIRING. WHEN YOU ARE PERFORMING SERVICE ON OR NEAR THE SRS COMPONENTS OR THE SRS WIRING, REFER TO THE SRS SERVICE INFORMATION. FAILURE TO FOLLOW WARNINGS COULD RESULT IN POSSIBLE AIR BAG DEPLOYMENT, PERSONAL INJURY, OR OTHERWISE UNNEEDED SRS SYSTEM REPAIRS.

CAUTION: Always use the correct fastener in the proper location. When you replace a fastener, use ONLY the exact part number for that application. ISUZU will call out those fasteners that require a replacement after removal. ISUZU will also call out the fasteners that require thread lockers or thread sealant. UNLESS OTHERWISE SPECIFIED, do not use supplemental coatings (Paints, greases, or other corrosion inhibitors) on threaded fasteners or fastener joint interfaces. Generally, such coatings adversely affect the fastener torque and the joint clamping force, and may damage the fastener. When you install fasteners, use the correct tightening sequence and specifications. Following these instructions can help you avoid damage to parts and systems.

General Description

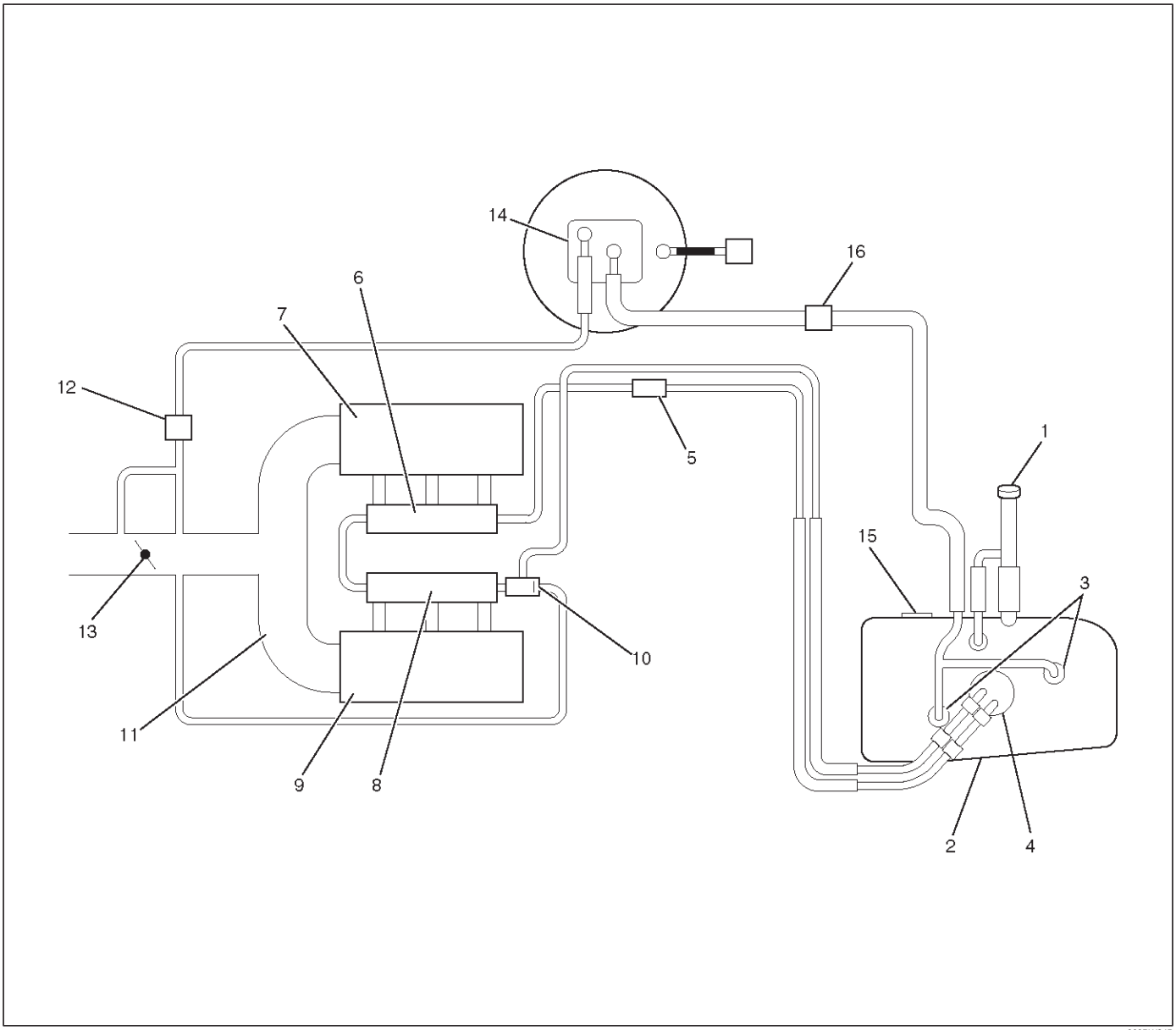

060RW245

Legend

(1) Fuel Filler Cap
(2) Fuel Tank
(3) Rollover Valve
(4) Fuel Pump Assembly
(5) Fuel Filter
(6) Fuel Rail Right
(7) Intake Air Port Right Bank
(8) Fuel Rail Left
(9) Intake Air Port Left Bank
(10) Fuel Pressure Control Valve
(11) Common Chamber
(12) Duty Solenoid Valve
(13) Throttle Valve
(14) Canister
(15) Fuel Gauge
(16) Check Valve

When working on the fuel system, there are several things to keep in mind:

- Any time the fuel system is being worked on, disconnect the negative battery cable except for those tests where battery voltage is required.
- Always keep a dry chemical (Class B) fire extinguisher near the work area.
- Replace all pipes with the same pipe and fittings that were removed.
- Clean and inspect “O” rings. Replace if required.
- Always relieve the line pressure before servicing any fuel system components.
- Do not attempt repairs on the fuel system until you have read the instructions and checked the pictures relating to that repair.
- Adhere to all Notices and Cautions.

All gasoline engines are designed to use only unleaded gasoline. Unleaded gasoline must be used for proper emission control system operation.
Its use will also minimize spark plug fouling and extend engine oil life. Using leaded gasoline can damage the emission control system and could result in loss of emission warranty coverage.
All cars are equipped with an Evaporative Emission Control System. The purpose of the system is to minimize the escape of fuel vapors to the atmosphere.

Fuel Metering

The Engine Control Module (ECM) is in complete control of this fuel delivery system during normal driving conditions.
The intake manifold function, like that of a diesel, is used only to let air into the engine. The fuel is injected by separate injectors that are mounted over the intake manifold.
The Barometric Pressure (BARO) sensor measures the changes in the barometric pressure which result from engine load and speed changes, which the BARO sensor converts to a voltage output.
This sensor generates the voltage to change corresponding to the flow of the air drawn into the engine. The changing voltage is transformed into an electric signal and provided to the ECM.
With receipt of the signals sent from the BARO sensor, Intake Air Temperature sensor and others, the ECM determines an appropriate fuel injection pulse width feeding such information to the fuel injector valves to effect an appropriate air/fuel ratio.
The Multiport Fuel Injection system utilizes an injection system where the injectors turn on at every crankshaft revolution. The ECM controls the injector on time so that the correct amount of fuel is metered depending on driving conditions.
Two interchangeable “O” rings are used on the injector that must be replaced when the injectors are removed.
The fuel rail is attached to the top of the intake manifold and supplies fuel to all the injectors.
Fuel is recirculated through the rail continually while the engine is running. This removes air and vapors from the fuel as well as keeping the fuel cool during hot weather operation.
The fuel pressure control valve that is mounted on the fuel rail maintains a pressure differential across the injectors under all operating conditions. It is accomplished by controlling the amount of fuel that is recirculated back to the fuel tank based on engine demand.
See Section “Driveability and Emission” for more information and diagnosis.

Fuel Filter

Removal

CAUTION: When repair to the fuel system has been completed, start engine and check the fuel system for loose connection or leakage. For the fuel system diagnosis, see Section “Driveability and Emission”.

1. Disconnect battery ground cable.
2. Remove Fuel filler cap.
3. Disconnect fuel hoses from fuel filter on both engine side and fuel tank side.
4. Fuel filter fixing bolt.
   - Remove the fuel filter fixing bolt on fuel filter holder.
5. Remove fuel filter.

Inspection

1. Replace the fuel filter if the fuel leaks from fuel filter body or if the fuel filter body itself is damaged.
2. Replace the filter if it is clogged with dirt or sediment.
3. Check the drain of receive rubber and if it is clogged with dust, clean it up with air.

Installation

1. Install the fuel filter in the proper direction.
2. Install fuel filter holder fixing bolt.
3. Connect fuel hoses on engine side(1) and fuel tank side(2).

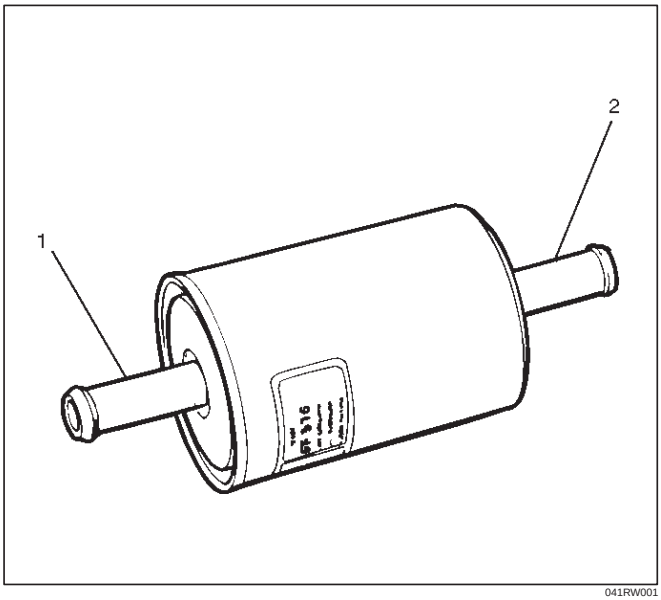

041RW001

4. Install fuel filler cap
5. Connect the battery ground cable.

Inspection

After installation, start engine and check for fuel leakage.

In–Tank Fuel Filter

The filter is located on the lower end of fuel pickup tube in the fuel tank. It prevents dirt from entering the fuel pipe and also stops water unless the filter is completely submerged in the water. It is a selfcleaning type, not requiring scheduled maintenance. Excess water and sediment in the tank restricts fuel supply to the engine, resulting in engine stoppage. In such a case, the tank must be cleaned thoroughly.

Fuel Pump Flow Test

If reduction of fuel supply is suspected, perform the following checks.

1. Make sure that there is fuel in the tank.
2. With the engine running, check the fuel feed pipe and hose from fuel tank to injector for evidence of leakage. Retighten, if pipe or hose connection is loose. Also, check pipes and hoses for squashing or clogging.
3. Insert the hose from fuel feed pipe into a clean container, and check for fuel pump flow rate.
4. Connect the pump relay terminals with a jumper wire(1) as shown and start the fuel pump to measure delivery.

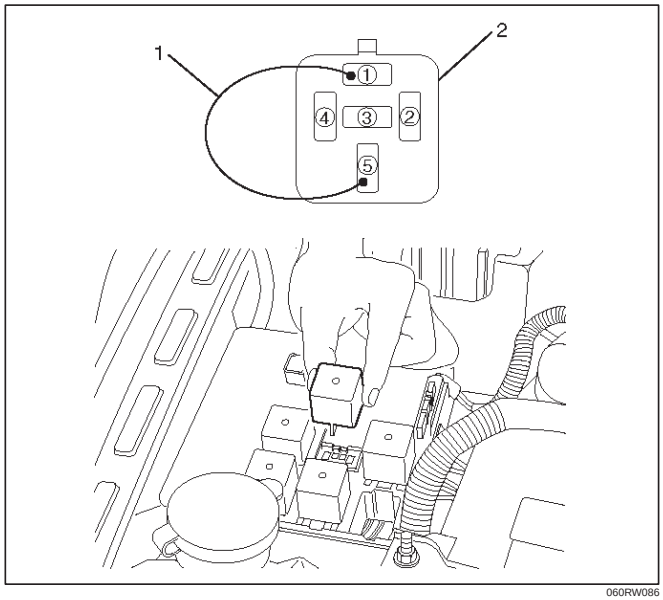

060RW086

CAUTION: Never generate sparks when connecting a jumper wire.

Delivery	Delivery
15 seconds	0.38 liters minimum

If the measure value is out of standard, conduct the pressure test.

Pressure test

For the pressure test to the fuel system, see Section 6E “Fuel Control System”.

Fuel Pump

Fuel Pump and Associated Parts

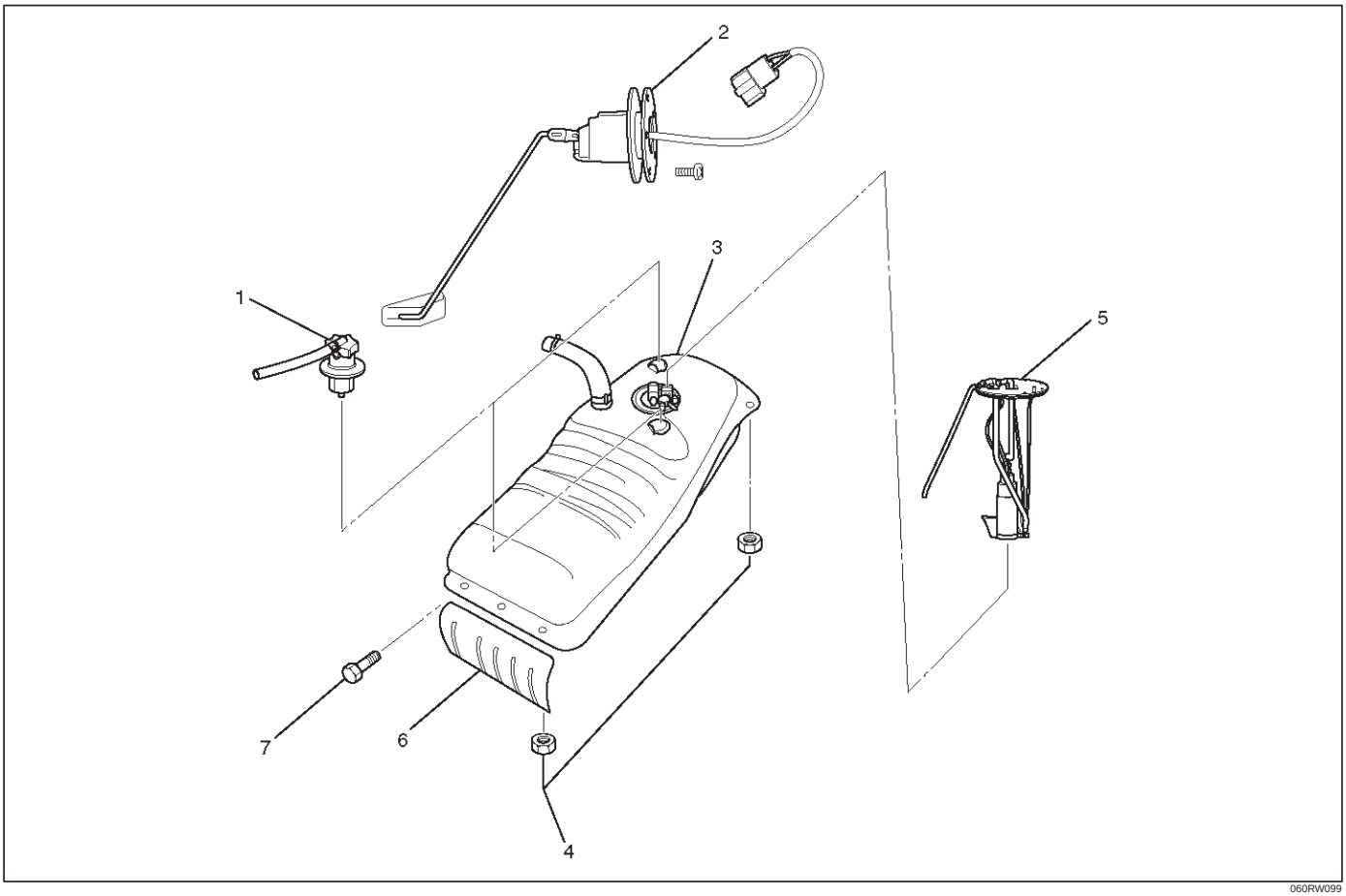

Legend

(1) Roll Over&Float Valve
(2) Fuel Gauge
(3) Fuel Tank Assembly
(4) Nut; Fuel Tank
(5) Fuel Pump Assembly
(6) Fuel Tank Cover
(7) Tank Cover Bolt

Removal

CAUTION: When repair to the fuel system has been completed, start engine and check the fuel system for loose connection or leakage. For the fuel system diagnosis, see Section "Driveability and Emission".

1. Disconnect battery ground cable.
2. Loosen fuel filler cap.
3. Support underneath of the fuel tank assembly (3) with a lifter.
4. Remove fuel tank assembly (3). Refer to "Fuel Tank Removal" in this section.
5. Remove fuel pump assembly (5).

NOTE: After removing pump assembly (7), cover fuel tank to prevent any dust entering.

Installation

1. Install FPAS assembly (5).
2. Install fuel tank assembly (3). Refer to "Fuel Tank Installation".
3. Fill the tank with fuel and tighten fuel filler cap.
4. Connect battery ground cable.

Fuel Pump Relay

General Description

In order to control the FPAS operation, the FPAS relay is provided. When the starter switch is turned to “ON” position, the FPAS relay operates the FPAS for 2 seconds.

When it is turned to “START” position, the Engine Control Module receives the reference pulse from the Ignition Control Module and it operates the relay, again causing the FPAS to feed fuel.

Fuel Tank

Fuel Tank and Associated Parts

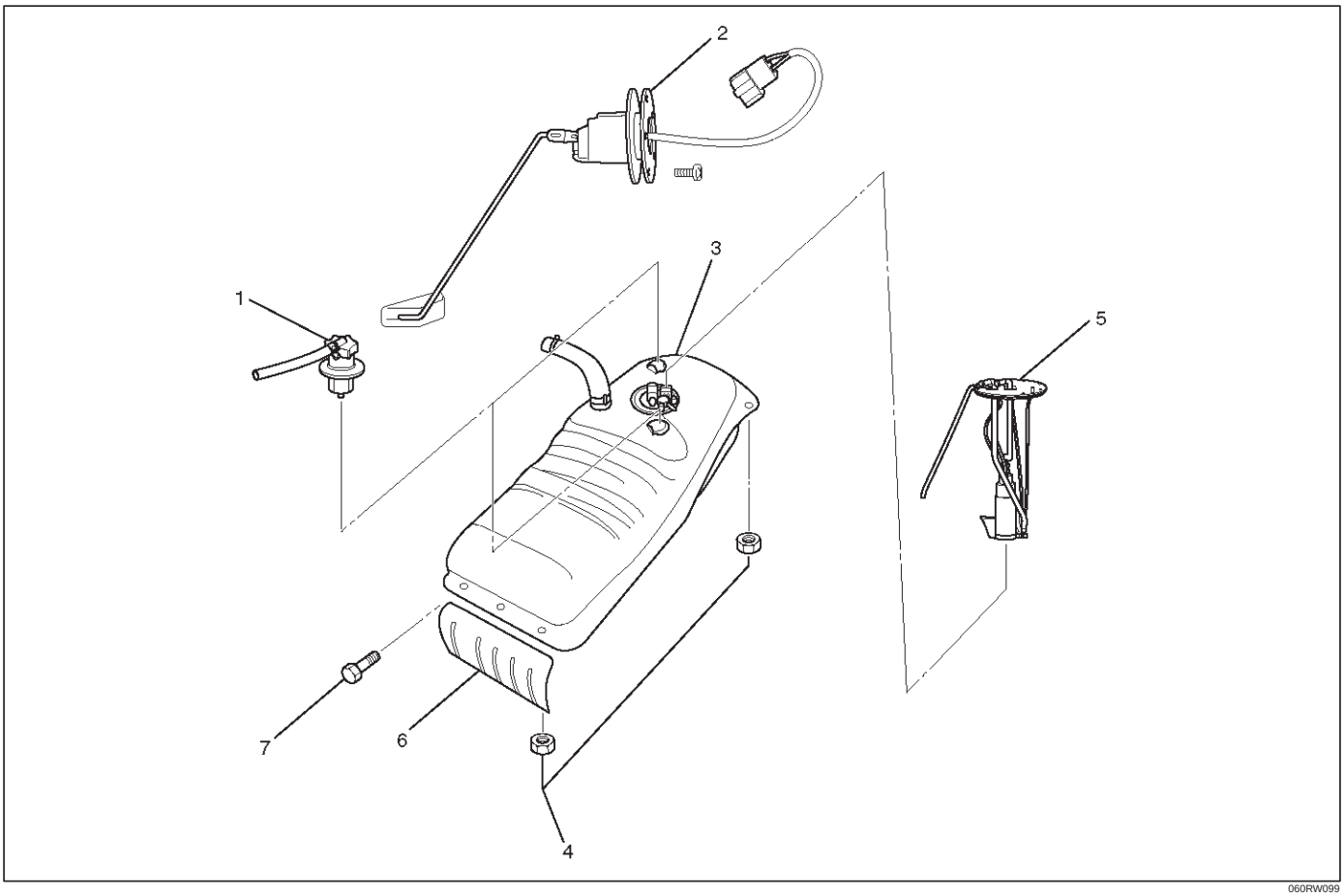

060RW099

Legend

(1) Roll Over&Float Valve
(2) Fuel Gauge
(3) Fuel Tank Assembly
(4) Nut; Fuel Tank
(5) Fuel Pump Assembly
(6) Fuel Tank Cover
(7) Tank Cover Bolt

Removal

CAUTION: When repair to the fuel system has been completed, start engine and check the fuel system for loose connection or leakage. For the fuel system diagnosis, see Section “Driveability and Emission”.

1. Disconnect battery ground cable.
2. Loosen fuel filler cap.
3. Support underneath of the fuel tank (3) with a lifter.
4. Disconnect evaporative fuel hose.
5. Disconnect fuel feed hose and fuel return hose near the fuel filter.

NOTE: Plug both ends of the fuel hoses to prevent fuel leakage.

6. Disconnect air breather hose and fuel filler hose at the fuel filler neck.

NOTE: Cover fuel hose to prevent any dust entering.

7. Remove the tank cover bolts (7) and the fuel tank cover (6), the six fuel tank assembly fixing nuts (4) of the tank.

8. Let down the tank and disconnect the wiring connectors.
9. Remove fuel tank assembly.
10. Remove roll over & float valve (1) along with the evaporative fuel hose and pipe.
11. Remove fuel pump along with the fuel hoses.

Installation

1. Install fuel pump (5).
2. Install roll over & float valve (1) by fitting in of the retaining cover (2).
3. Lift up fuel tank assembly and connect the wiring connectors (5,6).
4. Install fuel tank assembly along with the tank cover and tighten the six fixing nuts to the specified torque.

   Torque: 68 N·m (6.96thinsp;kg·m/50 lb ft)
5. Connect fuel filler hose and air breather hose, and clip them firmly.
6. Connect fuel feed hose and fuel return hose, and clip them firmly.
7. Connect evaporative fuel hose.
8. Tighten fuel filler cap.
9. Connect battery ground cable.

Fuel Gauge Unit

Removal and Installation

As for removal and installation of the Fuel Gauge Unit, refer to "Fuel Tank" of this section 6C as the fuel gauge unit is combined with the fuel pump and sender assembly.

Fuel Filler Cap

General Description

Fuel filler cap includes vacuum valve.
In case any high vacuum happen in tank, the valve works to adjust the pressure to prevent the tank from being damaged.

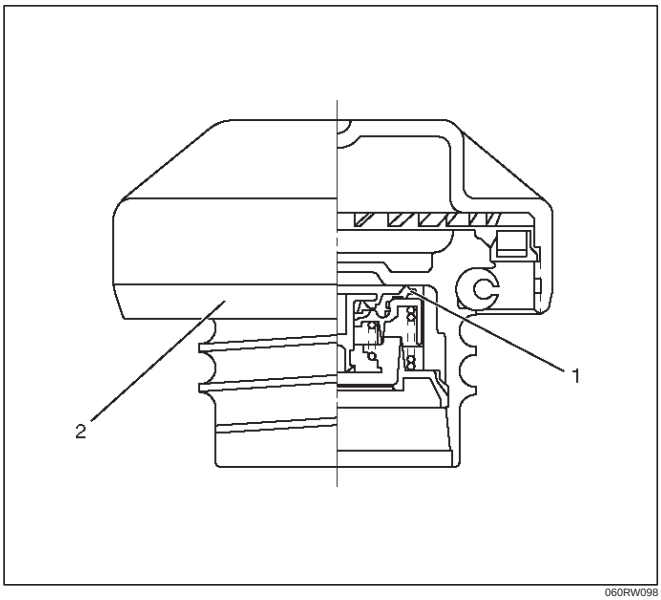

060RW098

Legend

(1) Vacuum Valve
(2) Fuel Filler Cap

Inspection

Check the seal ring in the filler cap for presence of any abnormality and for seal condition.
Replace the filler cap, if abnormal.

CAUTION: The fuel filler cap valve has characteristics.

A defective valve, no valve at all or a valve with the wrong characteristics will do a lot of harm to engine operating characteristics; be sure to use the same fuel filler cap as installed in this vehicle.

Main Data and Specifications

Torque Specification

N·m (kg·m/ lb·ft)

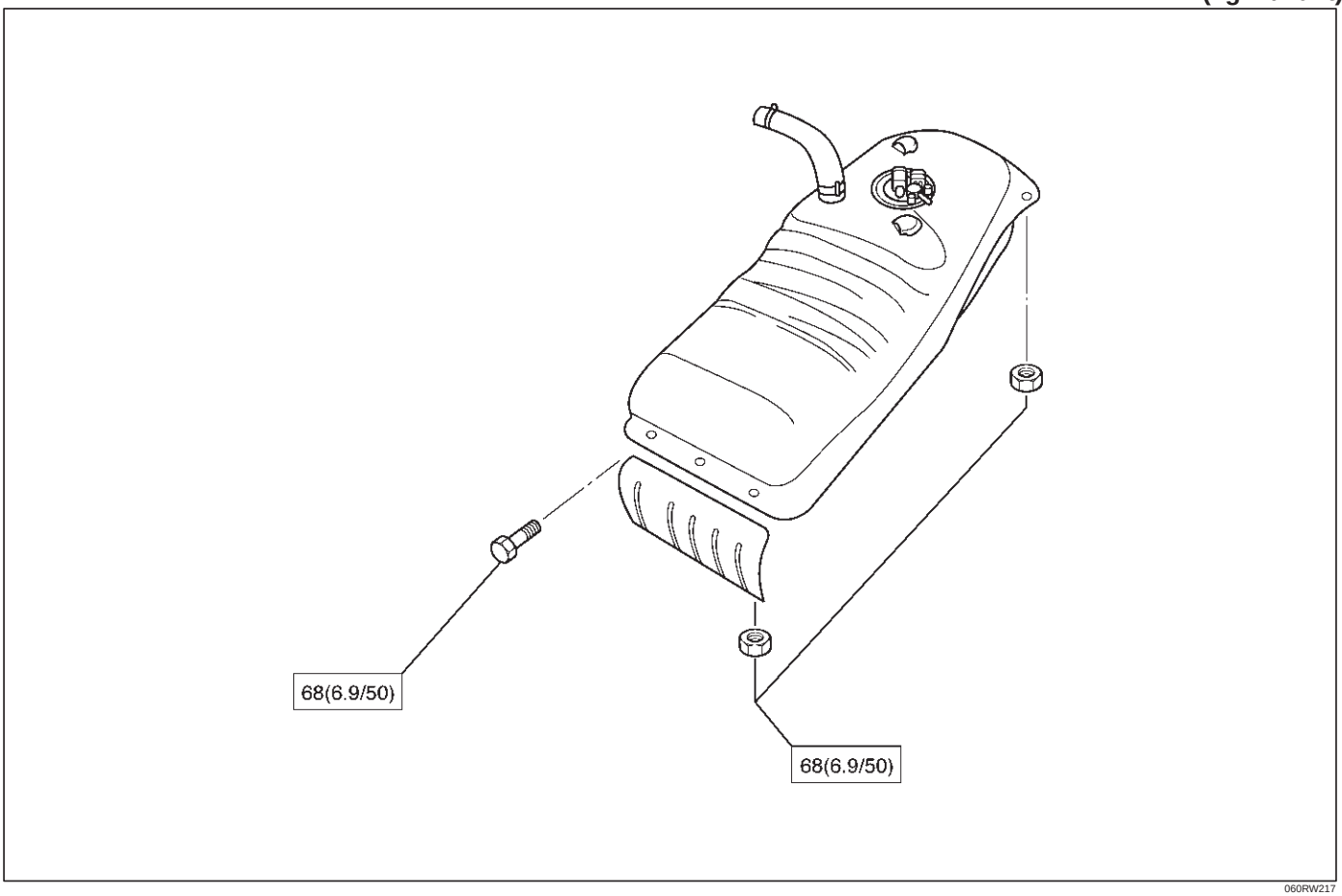

060RW217

ENGINE

ENGINE ELECTRICAL (6VD1 3.2L)

CONTENTS

Service Precaution 6D1–1
Battery 6D1–2
General Description 6D1–2
Diagnosis 6D1–2
Battery Charging 6D1–3
Jump Starting 6D1–3
Battery Removal 6D1–4
Battery Installation 6D1–4
Main Data and Specifications 6D1–5

Service Precaution

WARNING: THIS VEHICLE HAS A SUPPLEMENTAL RESTRAINT SYSTEM (SRS). REFER TO THE SRS COMPONENT AND WIRING LOCATION VIEW IN ORDER TO DETERMINE WHETHER YOU ARE PERFORMING SERVICE ON OR NEAR THE SRS COMPONENTS OR THE SRS WIRING. WHEN YOU ARE PERFORMING SERVICE ON OR NEAR THE SRS COMPONENTS OR THE SRS WIRING, REFER TO THE SRS SERVICE INFORMATION. FAILURE TO FOLLOW WARNINGS COULD RESULT IN POSSIBLE AIR BAG DEPLOYMENT, PERSONAL INJURY, OR OTHERWISE UNNEEDED SRS SYSTEM REPAIRS.

CAUTION: Always use the correct fastener in the proper location. When you replace a fastener, use ONLY the exact part number for that application. ISUZU will call out those fasteners that require a replacement after removal. ISUZU will also call out the fasteners that require thread lockers or thread sealant. UNLESS OTHERWISE SPECIFIED, do not use supplemental coatings (Paints, greases, or other corrosion inhibitors) on threaded fasteners or fastener joint interfaces. Generally, such coatings adversely affect the fastener torque and the joint clamping force, and may damage the fastener. When you install fasteners, use the correct tightening sequence and specifications. Following these instructions can help you avoid damage to parts and systems.

Battery

General Description

There are six battery fluid caps on the top of the battery. These are covered by a paper label.
The battery is completely sealed except for the six small vent holes on the side. These vent holes permit the escape of small amounts of gas generated by the battery.
This type of battery has the following advantages over conventional batteries:

1. There is no need to add water during the entire service life of the battery.
2. The battery protects itself against overcharging.
   The battery will refuse to accept an extensive charge.
   (A conventional battery will accept an excessive charge, resulting in gassing and loss of battery fluid.)
3. The battery is much less vulnerable to self discharge than a conventional type battery.

Diagnosis

1. Visual Inspection

Inspect the battery for obvious physical damage, such as a cracked or broken case, which would permit electrolyte loss.
Replace the battery if obvious physical damage is discovered during inspection.
Check for any other physical damage and correct it as necessary.

2. Hydrometer Check

There is a built–in hydrometer (Charge test indicator(1)) at the top of the battery. It is designed to be used during diagnostic procedures.
Before trying to read the hydrometer, carefully clean the upper battery surface.
If your work area is poorly lit, additional light may be necessary to read the hydrometer.

a. BLUE RING OR DOT VISIBLE(5) – Go to Step 4.
b. BLUE RING OR DOT NOT VISIBLE(4) – Go to Step 3.

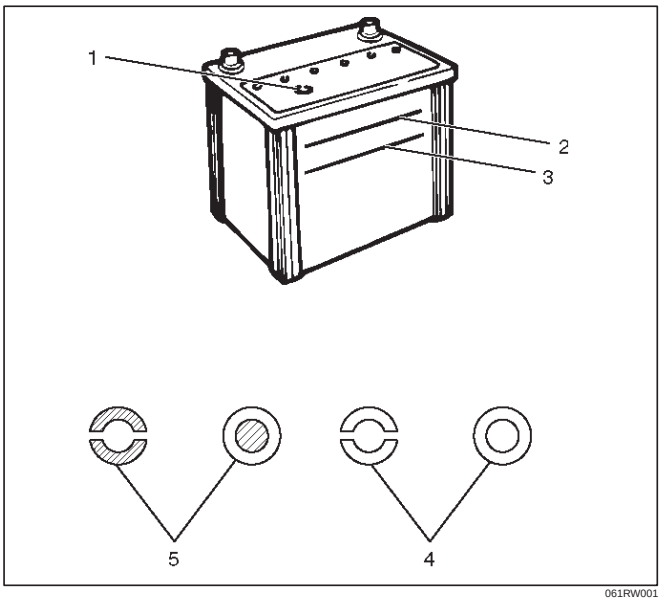

061RW001

3. Fluid Level Check

The fluid level should be between the upper level line(2) and lower level line(3) on side of battery.

a. CORRECT FLUID LEVEL – Charge the battery.
b. BELOW LOWER LEVEL – Replace battery.

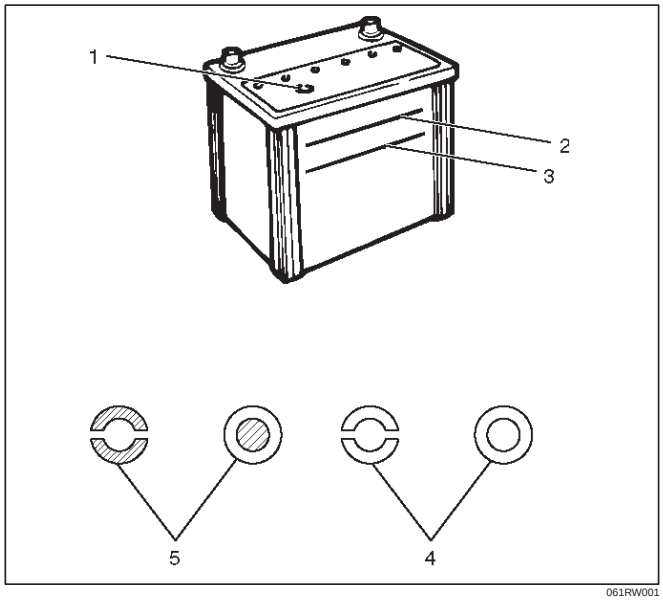

061RW001

4. Voltage Check

1. Put voltmeter test leads to battery terminals.
   a. VOLTAGE IS 12.4V OR ABOVE – Go to Step 5.
   b. VOLTAGE IS UNDER 12.4V – Go to procedure (2) below.
2. Determine fast charge amperage from specification. (See Main Data and Specifications in this section).
   Fast charge battery for 30 minutes at amperage rate no higher than specified value.
   Take voltage and amperage readings after charge.
   a. VOLTAGE IS ABOVE 16V AT BELOW 1/3 OF AMPERAGE RATE – Replace battery.
   b. VOLTAGE IS ABOVE 16V AT ABOVE 1/3 OF AMPERAGE RATE – Drop charging voltage to 15V and charge for 10 – 15 hours. Then go to Step 5.
   c. VOLTAGE IS BETWEEN 12V AND 16V – Continue charging at the same rate for an additional 3–1/2 hours. Then go to Step 5.
   d. VOLTAGE BELOW 12V – Replace Battery.

5. Load Test

1. Connect a voltmeter and a battery load tester across the battery terminals.
2. Apply 300 ampere load for 15 seconds to remove surface charge from the battery. Remove load.
3. Wait 15 seconds to let battery recover. Then apply specified load from specifications (See Main Data and Specifications in this section).

   Read voltage after 15 seconds, then remove load.

   a. VOLTAGE DOES NOT DROP BELOW THE MINIMUM LISTED IN THE TABLE – The battery is good and should be returned to service.

   b. VOLTAGE IS LESS THAN MINIMUM LISTED – Replace battery.

ESTIMATED TEMPERATURE		MINIMUM VOLTAGE
˚F	˚C	V
70	21	9.6
60	16	9.5
50	10	9.4
40	4	9.3
30	–1	9.1
20	–7	8.9
10	–12	8.7
0	–18	8.5
The battery temperature must be estimated by feel and by the temperature the battery has been exposed to for the preceding few hours.		

Battery Charging

Observe the following safety precautions when charging the battery:

1. Never attempt to charge the battery when the fluid level is below the lower level line on the side of the battery. In this case, the battery must be replaced.
2. Pay close attention to the battery during charging procedure.

   Battery charging should be discontinued or the rate of charge reduced if the battery feels hot to the touch.

   Battery charging should be discontinued or the rate of charge reduced if the battery begins to gas or spew electrolyte from the vent holes.
3. In order to more easily view the hydrometer blue dot or ring, it may be necessary to jiggle or tilt the battery.
4. Battery temperature can have a great effect on battery charging capacity.
5. The sealed battery used on this vehicle may be either quick charged or slow charged in the same manner as other batteries.

   Whichever method you decide to use, be sure that you completely charge the battery. Never partially charge the battery.

Jump Starting

Jump Starting with an Auxiliary (Booster) Battery

CAUTION: Never push or tow the vehicle in an attempt to start it. Serious damage to the emission system as well as other vehicle parts will result.

Treat both the discharged battery and the booster battery with great care when using jumper cables. Carefully follow the jump starting procedure, being careful at all times to avoid sparking.

WARNING: FAILURE TO CAREFULLY FOLLOW THE JUMP STARTING PROCEDURE COULD RESULT IN THE FOLLOWING:

1. Serous personal injury, particularly to your eyes.
2. Property damage from a battery explosion, battery acid, or an electrical fire.
3. Damage to the electronic components of one or both vehicles particularly.

Never expose the battery to an open flame or electrical spark. Gas generated by the battery may catch fire or explode.

Remove any rings, watches, or other jewelry before working around the battery. Protect your eyes by wearing an approved set of goggles.

Never allow battery fluid to come in contact with your eyes or skin.

Never allow battery fluid to come in contact with fabrics or painted surfaces.

Battery fluid is a highly corrosive acid.

Should battery fluid come in contact with your eyes, skin, fabric, or a painted surface, immediately and thoroughly rinse the affected area with clean tap water.

Never allow metal tools or jumper cables to come in contact with the positive battery terminal, or any other metal surface of the vehicle. This will protect against a short circuit.

Always keep batteries out of reach of young children.

Jump Starting Procedure

1. Set the vehicle parking brake.

   If the vehicle is equipped with an automatic transmission, place the selector level in the “PARK” position.

   If the vehicle is equipped with a manual transmission, place the shift lever in the “NEUTRAL” position.

   Turn “OFF” the ignition.

   Turn “OFF” all lights and any other accessory requiring electrical power.
2. Look at the built–in hydrometer.

   If the indication area of the built–in hydrometer is completely clear, do not try to jump start.

3. Attach the end of one jumper cable to the positive terminal of the booster battery.

   Attach the other end of the same cable to the positive terminal of the discharged battery.

   Do not allow the vehicles to touch each other. This will cause a ground connection, effectively neutralizing the charging procedure.

   Be sure that the booster battery has a 12 volt rating.

4. Attach one end of the remaining cable to the negative terminal of the booster battery.

   Attach the other end of the same cable to a solid engine ground (such as the air conditioning compressor bracket or the generator mounting bracket) of the vehicle with the discharged battery.

   The ground connection must be at least 450 mm (18 in.) from the battery of the vehicle whose battery is being charged.

WARNING: NEVER ATTACH THE END OF THE JUMPER CABLE DIRECTLY TO THE NEGATIVE TERMINAL OF THE DEAD BATTERY.

5. Start the engine of the vehicle with the good battery.

   Make sure that all unnecessary electrical accessories have been turned “OFF”.

6. Start the engine of the vehicle with the dead battery.
7. To remove the jumper cables, follow the above directions in reverse order.

   Be sure to first disconnect the negative cable from the vehicle with the discharged battery.

Battery Removal

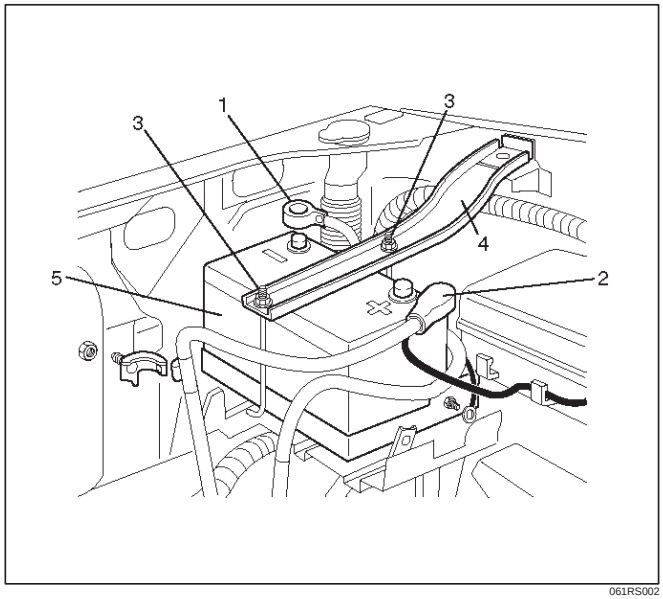

061RS002

1. Remove negative cable (1).
2. Remove positive cable (2).
3. Remove retainer screw and rods (3).
4. Remove retainer (4).
5. Remove battery (5).

Battery Installation

1. Install battery (5).
2. Install retainer (4).
3. Install retainer screw and rods (3).

NOTE: Make sure that the rod is hooked on the body side.

4. Install positive cable (2).
5. Install negative cable (1).

Main Data and Specifications

General Specifications

Model (JIS)	95D31R–MF	80D26R–MF	75D26R–MF
Voltage (V)	12	12	12
Cold–Cranking Performance (Amp)	622	582	490
Reserve Capacity (Min)	159	133	123
Load Test (Amp)	310	290	245
Fast Charge Maximum Amperage (Amp)	20	20	20
BCI Group No.	27	24	24

ENGINE

IGNITION SYSTEM (6VD1 3.2L)

CONTENTS

Service Precaution 6D2–1
General Description 6D2–2
Diagnosis 6D2–2
Ignition Coil 6D2–3
Removal 6D2–3
Inspection and Repair 6D2–3
Installation 6D2–3
Spark Plug 6D2–4
Removal 6D2–4
Inspection and Repair 6D2–4
Installation 6D2–4
Crankshaft Angle Sensor 6D2–5
Removal 6D2–5
Installation 6D2–5
Main Data and Specifications 6D2–6

Service Precaution

WARNING: THIS VEHICLE HAS A SUPPLEMENTAL RESTRAINT SYSTEM (SRS). REFER TO THE SRS COMPONENT AND WIRING LOCATION VIEW IN ORDER TO DETERMINE WHETHER YOU ARE PERFORMING SERVICE ON OR NEAR THE SRS COMPONENTS OR THE SRS WIRING. WHEN YOU ARE PERFORMING SERVICE ON OR NEAR THE SRS COMPONENTS OR THE SRS WIRING, REFER TO THE SRS SERVICE INFORMATION. FAILURE TO FOLLOW WARNINGS COULD RESULT IN POSSIBLE AIR BAG DEPLOYMENT, PERSONAL INJURY, OR OTHERWISE UNNEEDED SRS SYSTEM REPAIRS.

CAUTION: Always use the correct fastener in the proper location. When you replace a fastener, use ONLY the exact part number for that application. ISUZU will call out those fasteners that require a replacement after removal. ISUZU will also call out the fasteners that require thread lockers or thread sealant. UNLESS OTHERWISE SPECIFIED, do not use supplemental coatings (Paints, greases, or other corrosion inhibitors) on threaded fasteners or fastener joint interfaces. Generally, such coatings adversely affect the fastener torque and the joint clamping force, and may damage the fastener. When you install fasteners, use the correct tightening sequence and specifications. Following these instructions can help you avoid damage to parts and systems.

General Description

Ignition is done by the electronic ignition (EI) that directly fires the spark plugs from ignition coils through spark plug wires without using a distributor. A pair of ignition coils for the cylinders having different phases by 360˚ (No.1 and No.4,No.2 and No.5,No.3 and No.6) are fired simultaneously.
Since the cylinder on exhaust stroke requires less energy to fire its ignition plug, energy from the ignition coils can be utilized to fire the mating cylinder on compression stroke. After additional 360˚ rotation, respective cylinder strokes are reversed.
The EI consists of six ignition coils,ignition control module, crank angle sensor, engine control module (ECM) and other components.
The ignition coils are connected with the ECM by means of a 32 pin connector.
The ignition control module turns on/off the primary circuit of ignition coils, and also it controls the ignition timing at the engine speed below 538 rpm.
A notch in the timing disc on the crankshaft activates the crank angle sensor which then sends information such as firing order and starting timing of each ignition coil to the ECM.
Further, the EI employs ignition control (IC) to control similar to a distributor system.

Diagnosis

Refer to Section Drivability and Emissions for the diagnosis to electronic ignition system (EI system).

Ignition Coil

Removal

1. Disconnect battery ground cable.
2. Ignition coil connector and ignition coil.
   - Disconnect three connector from ignition coil.
   - Remove harness bracket bolt on cylinder head cover.
   - Remove fixing bolts on ignition coil.

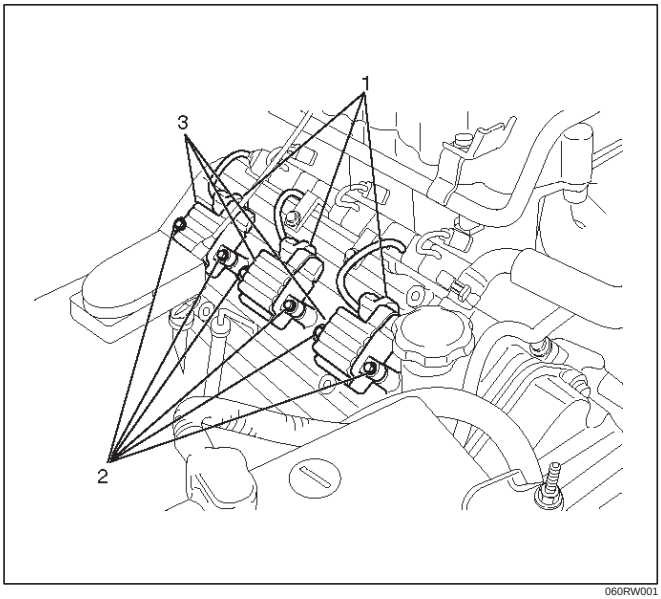

060RW001

Legend

(1) Ignition Coil Connector
(2) Bolt
(3) Ignition Coil Assembly

Inspection and Repair

Check the ignition coil assembly for insulation. Check terminals for corrosion or damage, and replace as necessary.
Measuring resistance of ignition coil assembly.

Terminal No.	Limit
1 to 2	Without 0 ohm or infinity maximum ohm.
1 to 3	Same as above
2 to 3	Same as above

Measure resistance of ignition coil assembly, and replace the ignition coil assembly if its value exceeds the standard.

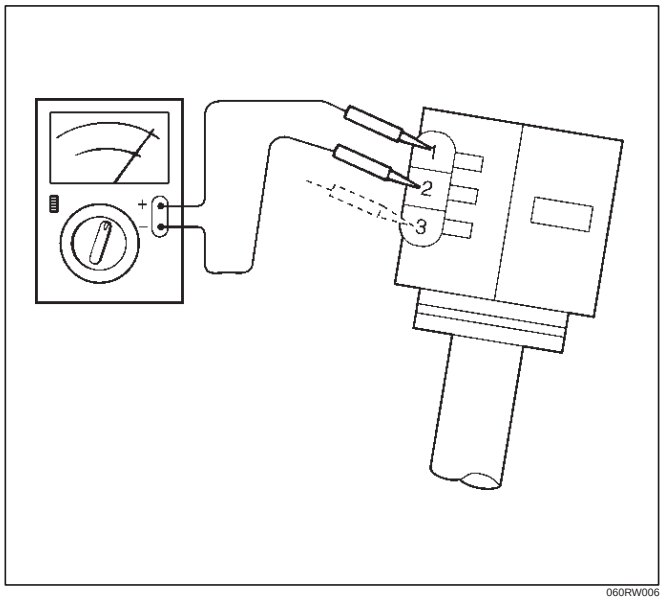

060RW006

Installation

1. Install the ignition coil assembly (3).
   Connect ignition coil connector (1) and ignition coil (3), then tighten bolt (2) to the specified torque.

   Torque: 4 N·m (0.4 kg·m/35 lb in)

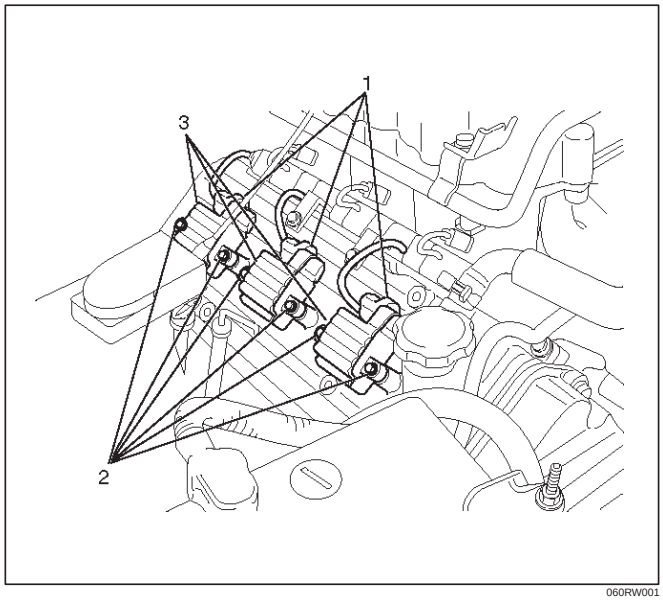

060RW001

2. Connect battery ground cable.

Spark Plug

Removal

1. Remove spark plugs.

Inspection and Repair

The spark plug affects entire engine performance and therefore its inspection is very important.

- Check electrode and insulator for presence of cracks, and replace if any.
- Check electrode for wear, and replace if necessary.
- Check gasket for damage, and replace if necessary.
- Measure insulation resistance with an ohmmeter, and replace if faulty.
- Adjust spark plug gap to 1.0 mm (0.04 in) ~ 1.1 mm (0.043 in).
- Check fuel and electrical systems if spark plug is extremely dirty.
- Use spark plugs having low heat value (hot type plug) if fuel and electrical systems are normal.
- Use spark plugs having high heat value (cold type plug) if insulator and electrode are extremely burned.

Sooty Spark Plugs

Much deposit of carbon or oil on the electrode and insulator of spark plug reduces the engine performance.

Possible causes:

- Too rich mixture
- Presence of oil in combustion chamber
- Incorrectly adjusted spark plug gap

Burning Electrodes

This fault is characterized by scorched or heavily oxidized electrode or blistered insulator nose.

Possible causes:

- Too lean mixture
- Improper heat value

Measuring Insulation Resistance

- Measure insulation resistance using a 500 volt megaohm meter.
- Replace spark plugs if measured value is out of standard.

Insulation resistance: 50 MΩ or more

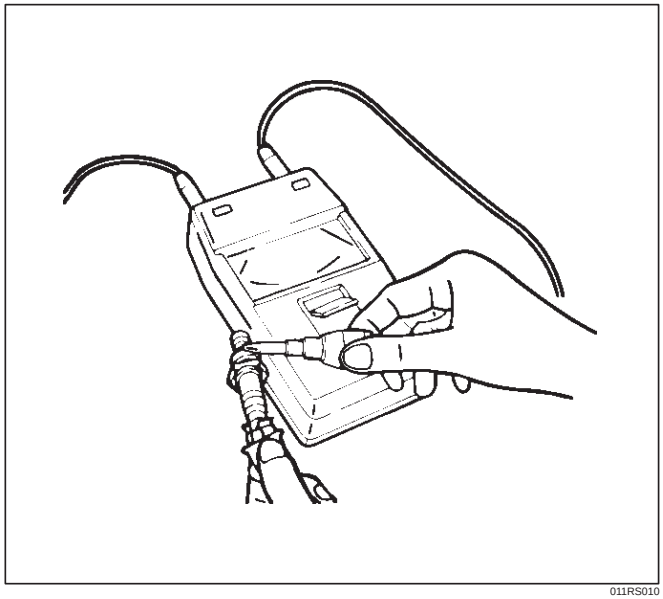

011RS010

Cleaning Spark Plugs

- Clean spark plugs with a spark plug cleaner.
- Raise the ground electrode to an angle of 45 to 60 degrees. If electrode is wet, dry it before cleaning.
- After spark plug is thoroughly cleaned, check insulator for presence of cracks.
- Clean threads and metal body with a wire brush.
- File the electrode tip if electrode is extremely worn.
- Bend the ground electrode to adjust the spark plug gap.

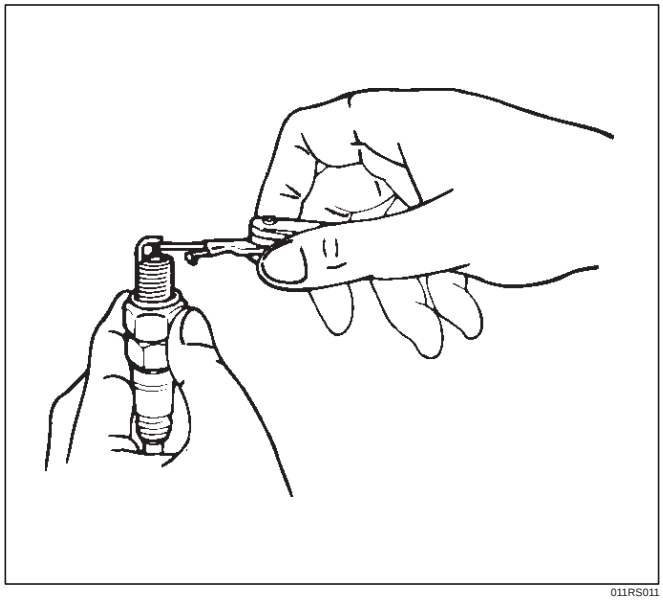

011RS011

Installation

1. Spark plugs
   - Tighten spark plugs to the specified torque.

   Torque: 18 N·m (1.8 kg·m/13 lb ft)

Crankshaft Angle Sensor

Removal

1. Disconnect battery ground cable
2. Wiring connector from crankshaft angle sensor.
3. Remove crankshaft angle sensor from cylinder block.

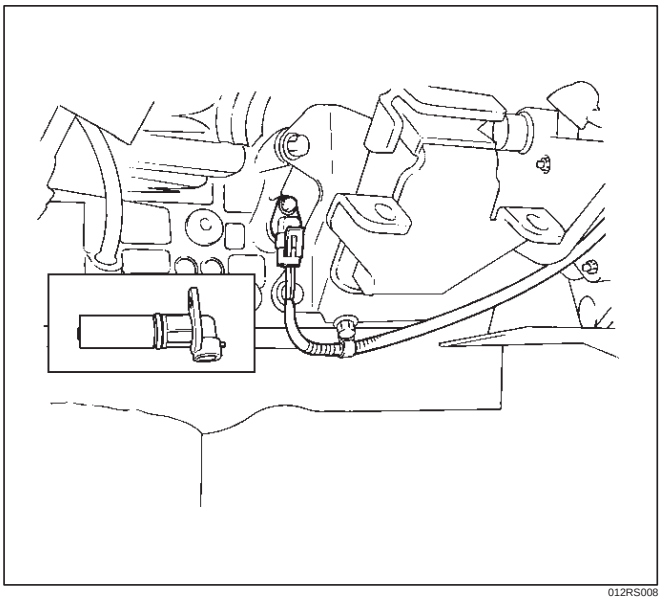

012RS008

Installation

1. Install crankshaft angle sensor into the cylinder block. Before installation,apply small amount of engine oil to the O–ring.

   Torque: 10 N·m (1.0 kg·m/89 lb in)

2. Reconnect wiring connector to crankshaft angle sensor.

Main Data and Specifications

General Specifications

Ignition System	
Ignition Form	Electronic Ignition System (EI system) with Crankshaft angle Sensor
Spark Plug	
Type	K16PR–P11 RC10PYP4 PK16PR11
Plug gap	1.0 mm (0.04 in) – 1.1 mm (0.043 in)
Torque	18 N·m (13lb ft)

Torque Specifications

N·m (kg·m/ lb·ft)

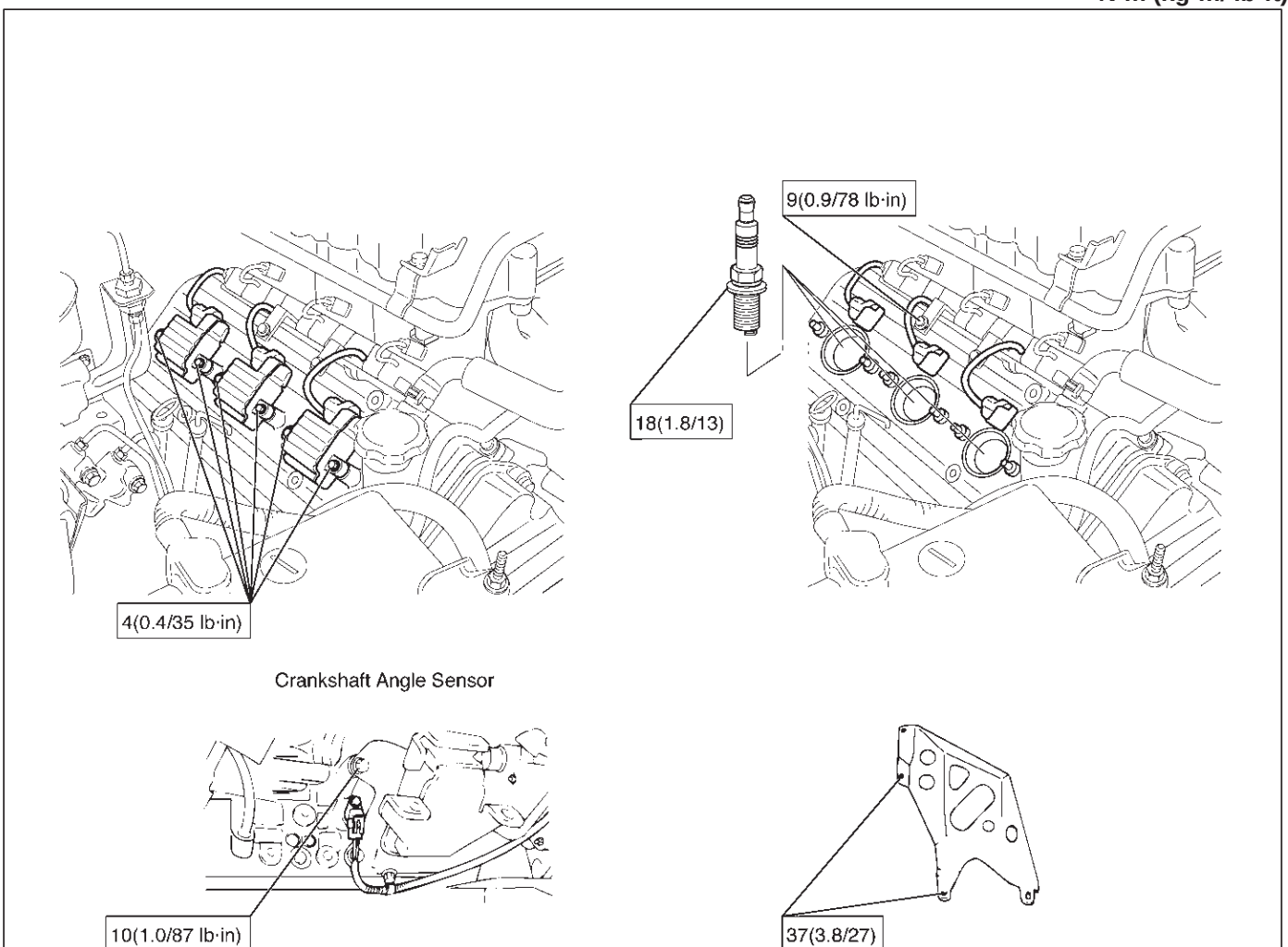

E06RW038

ENGINE

STARTING AND CHARGING SYSTEM (6VD1 3.2L)

CONTENTS

Service Precaution 6D3–1
Starting System 6D3–2
General Description 6D3–2
Diagnosis 6D3–4
Starter 6D3–5
Removal 6D3–5
Installation 6D3–5
Disassembled View 6D3–6
Disassembly 6D3–7
Inspection and Repair 6D3–9
Reassembly 6D3–13
Main Data and Specifications 6D3–15
Charging System 6D3–17
General Description 6D3–17
General On–Vehicle Inspection 6D3–17
Generator 6D3–18
Removal 6D3–18
Inspection 6D3–18
Installation 6D3–18
Disassembled View 6D3–19
Disassembly 6D3–19
Inspection and Repair 6D3–22
Reassembly 6D3–24
Bench Test 6D3–24
Main Data and Specifications 6D3–25

Service Precaution

WARNING: THIS VEHICLE HAS A SUPPLEMENTAL RESTRAINT SYSTEM (SRS). REFER TO THE SRS COMPONENT AND WIRING LOCATION VIEW IN ORDER TO DETERMINE WHETHER YOU ARE PERFORMING SERVICE ON OR NEAR THE SRS COMPONENTS OR THE SRS WIRING. WHEN YOU ARE PERFORMING SERVICE ON OR NEAR THE SRS COMPONENTS OR THE SRS WIRING, REFER TO THE SRS SERVICE INFORMATION. FAILURE TO FOLLOW WARNINGS COULD RESULT IN POSSIBLE AIR BAG DEPLOYMENT, PERSONAL INJURY, OR OTHERWISE UNNEEDED SRS SYSTEM REPAIRS.

CAUTION: Always use the correct fastener in the proper location. When you replace a fastener, use ONLY the exact part number for that application. ISUZU will call out those fasteners that require a replacement after removal. ISUZU will also call out the fasteners that require thread lockers or thread sealant. UNLESS OTHERWISE SPECIFIED, do not use supplemental coatings (Paints, greases, or other corrosion inhibitors) on threaded fasteners or fastener joint interfaces. Generally, such coatings adversely affect the fastener torque and the joint clamping force, and may damage the fastener. When you install fasteners, use the correct tightening sequence and specifications. Following these instructions can help you avoid damage to parts and systems.

Starting System

General Description

Cranking Circuit

The cranking system consists of a battery, starter, starter switch, starter relay, etc. These main components are connected.

Starter

The cranking system employs a magnetic type reduction starter in which the motor shaft is also used as a pinion shaft. When the starter switch is turned on, the contacts of magnetic switch are closed, and the armature rotates. At the same time, the plunger is attracted, and the pinion is pushed forward by the shift lever to mesh with the ring gear.

Then, the ring gear runs to start the engine. When the engine starts and the starter switch is turned off, the plunger returns, the pinion is disengaged from the ring gear, and the armature stops rotation. When the engine speed is higher than the pinion, the pinion idles, so that the armature is not driven.

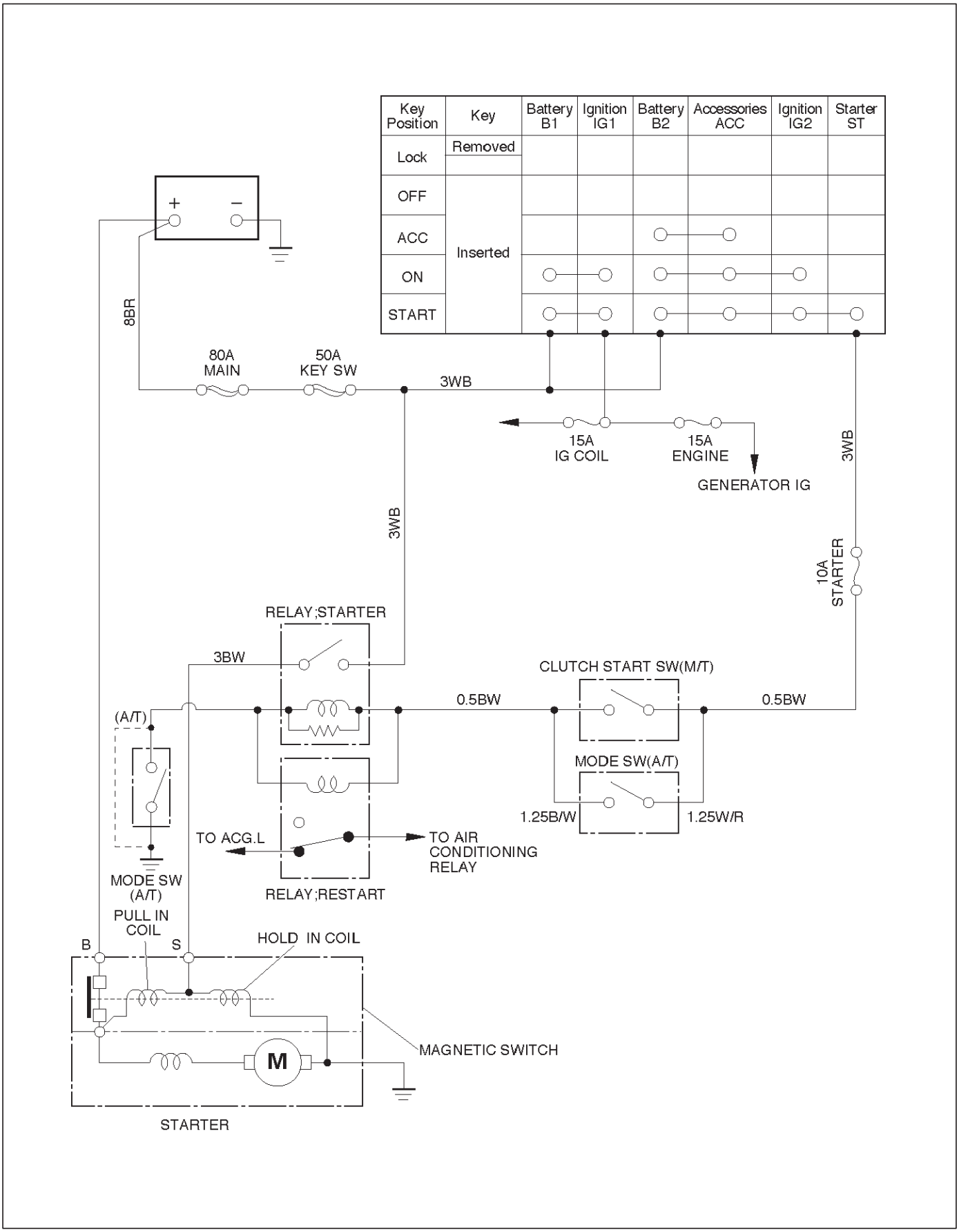
Key Position
Key
Battery B1
Ignition IG1
Battery B2
Accessories ACC
Ignition IG2
Starter ST
Lock
Removed
OFF
ACC
ON
START
Inserted
+
–
8BR
80A MAIN
50A KEY SW
3WB
15A IG COIL
15A ENGINE
GENERATOR IG
3WB
3WB
10A STARTER
RELAY;STARTER
3BW
CLUTCH START SW(M/T)
0.5BW
0.5BW
(A/T)
MODE SW(A/T)
1.25B/W
1.25W/R
TO ACG.L
TO AIR CONDITIONING RELAY
MODE SW (A/T)
RELAY;RESTART
PULL IN COIL
B
S
HOLD IN COIL
MAGNETIC SWITCH
M
STARTER

C06RW005

Diagnosis

Condition	Possible cause	Correction
Starter does not run	Charging failure	Repair charging system
	Battery Failure	Replace Battery
	Terminal connection failure	Repair or replace terminal connector and/or wiring harness
	Starter switch failure	Repair or replace starter switch
	Starter failure	Repair or replace starter

Starter

Removal

1. Battery ground cable.
2. Remove exhaust front left pipe.
3. Remove heat protector(3).
4. Disconnect starter wiring connector from terminals “B” and “S”(4).
5. Remove starter assembly mounting bolts on inside and outside(5).
6. Remove starter assembly toward the bottom of engine(6).

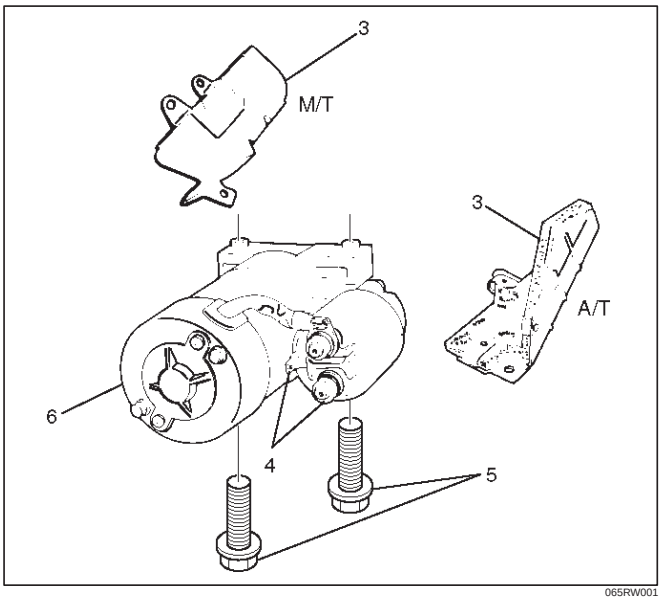

065RW001

Installation

1. Install starter assembly(6).
2. Install mounting bolts and tighten bolts to specified torque(5).

   Torque: 40 N·m (4.1 kg·m/30 lb ft)
3. Reconnect the connectors to terminals “B” and “S” and tighten Terminals “B” to specified torque.

   Torque: 9 N·m (0.9 kg·m/80 lb in)
4. Install heat protector(3).

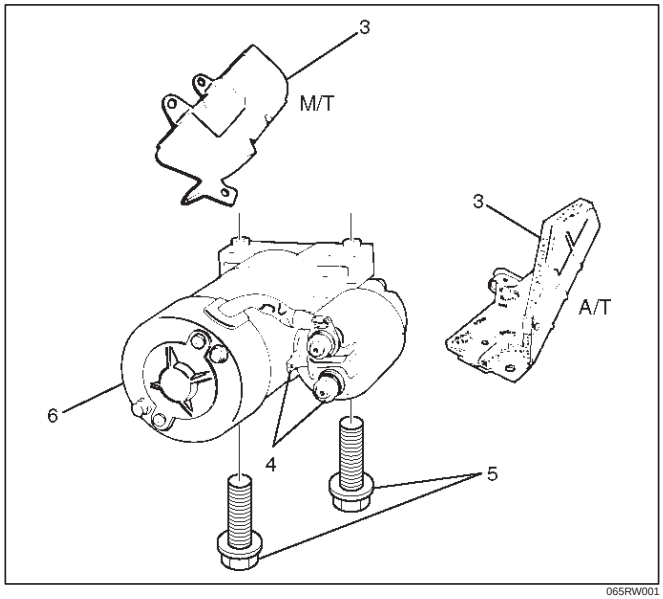

065RW001

5. Install exhaust front left pipe and tighten bolts and nuts to specified torque(2).

   Stud Nuts

   Torque: 67 N·m (6.8 kg·m/49 lb ft)

   Nuts

   Torque: 43 N·m (4.4 kg·m/32 lb ft)
6. Reconnect the battery ground cable.

Disassembled View

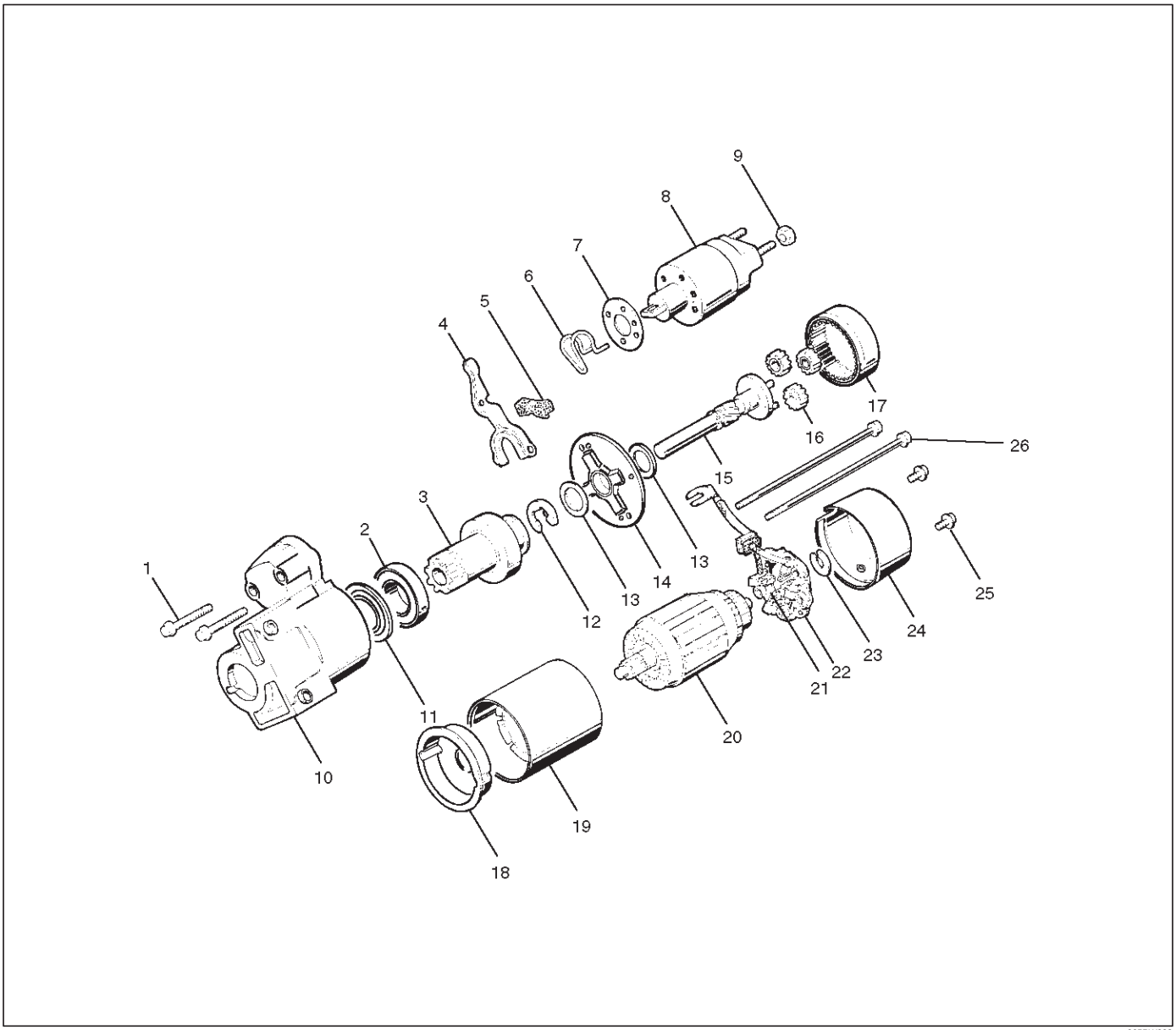

065RW002

Legend

(1) Bolt (2 pcs)
(2) Ball Bearing
(3) Pinion
(4) Shift Lever
(5) Dust Cover
(6) Torsion Spring
(7) Dust Cover
(8) Magnetic Switch
(9) Nut
(10) Gear Case
(11) Bearing Cover
(12) E–ring
(13) Thrust Washer (2)
(14) Center Bracket
(15) Pinion Shaft
(16) Planet Gear (3)
(17) Internal Gear
(18) Center Bracket (A)
(19) Yoke Assembly
(20) Armature
(21) Brush
(22) Brush Holder
(23) Thrust Washer
(24) Rear Cover
(25) Screw (2 pcs)
(26) Through Bolt (2 pcs)

Disassembly

1. Loosen the nut(1) on terminal “M” of magnetic switch and disconnect the connector cable.
2. Remove bolt (2 pcs) (2).

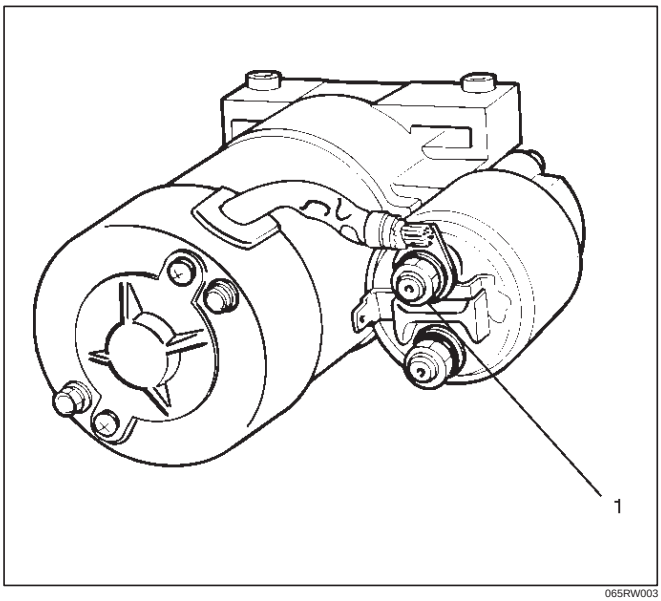

065RW003

3. Remove magnetic switch(5).
4. Remove dust cover(4).
5. Remove torsion spring bolts, then the magnetic switch assembly.
6. Remove torsion spring(3) from magnetic switch assembly(5).

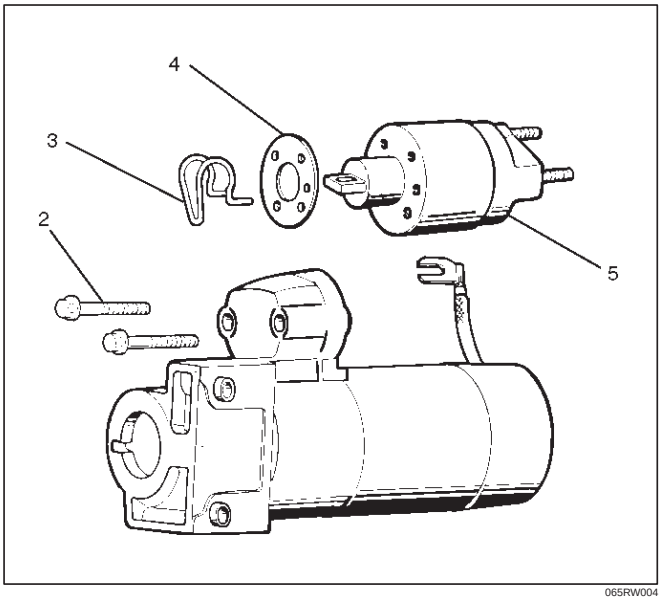

065RW004

7. Remove screw (2 pcs) (8).
8. Remove through bolt (2 pcs) (7).
9. Remove screws and through bolts, then the rear cover(9) then remove thrust washer(10).
10. Remove brush holder(6).

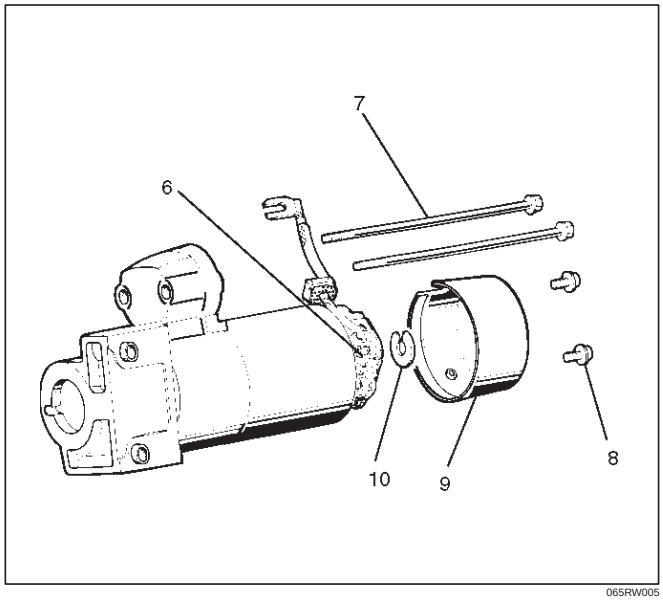

065RW005

11. Raise a brush spring to detach brushes (4 pcs) from the commutator face and pull off the brush holder(12) and brush(11).

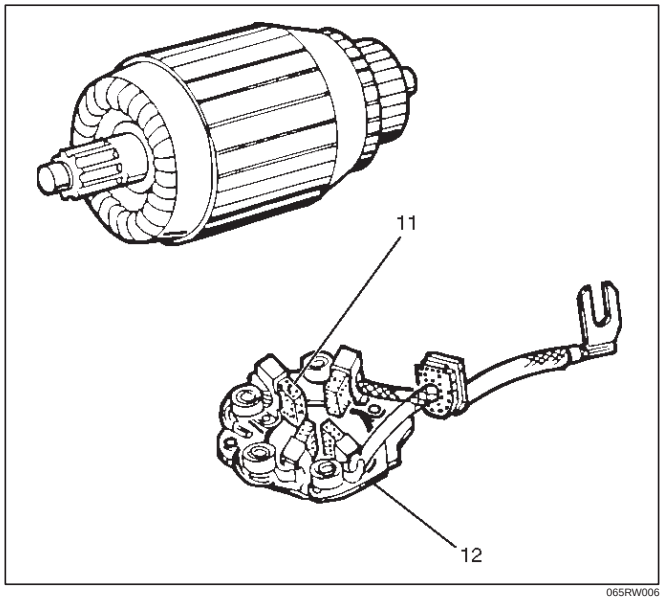

065RW006

12. Remove yoke assembly(14).
13. Remove armature(15).
14. Pull off the yoke assembly, then remove armature, washer and center bracket.(A) (13).

NOTE: In disassembling the yoke assembly, hold the armature and pull off slowly the yoke assembly. Because of strong magnetic force, avoid placing a metallic part near armature.

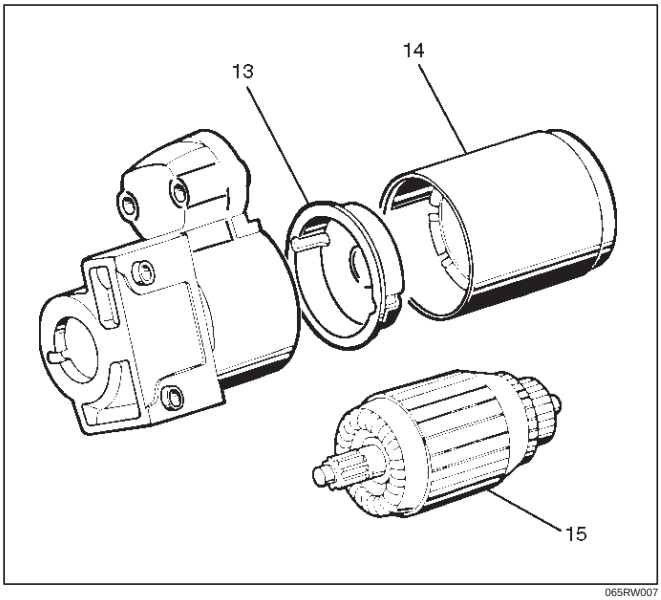

065RW007

15. Remove dust cover(17).
16. Remove a dust cover and shift lever(16) from the gear case.

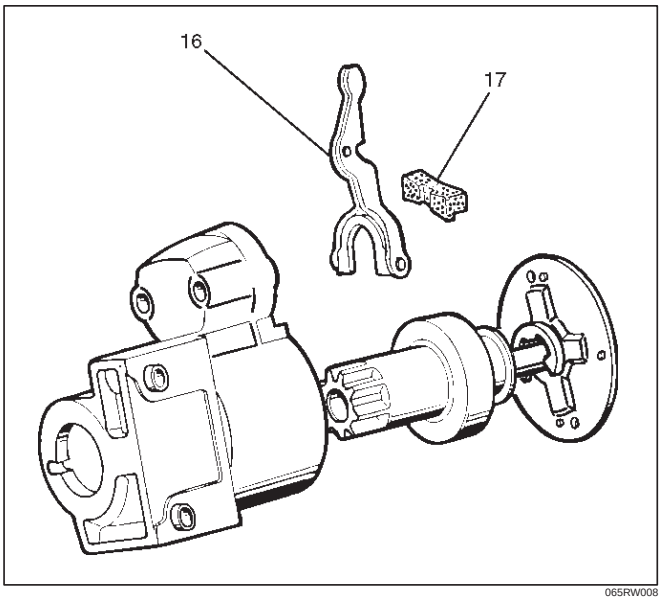

065RW008

17. Remove ball bearing(19).
18. Remove bearing cover(20).
19. Remove a ball bearing and bearing cover from the gear case(18).

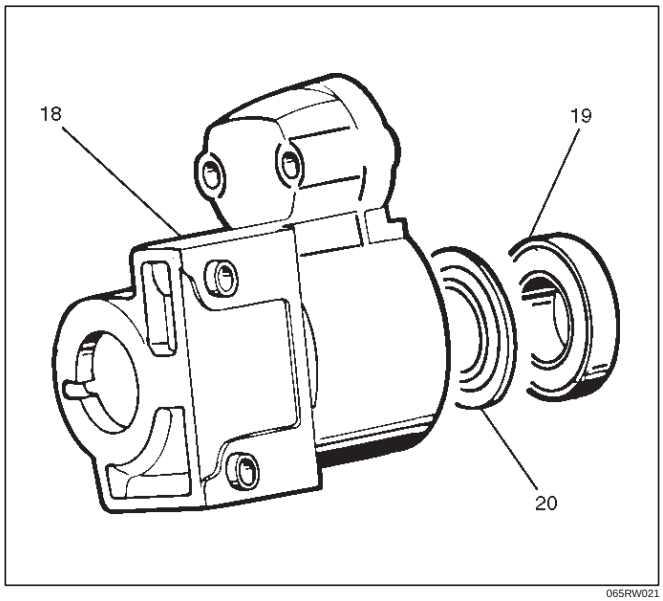

065RW021

20. Internal gear(21).
21. Remove internal gear and planet gear(3) (22).

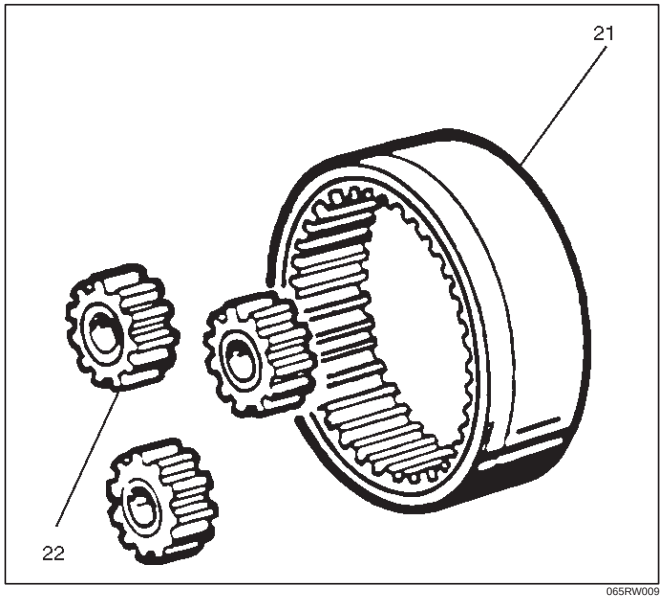

065RW009

22. Remove an E–ring(23) from the pinion shaft using a flat blade screwdriver.

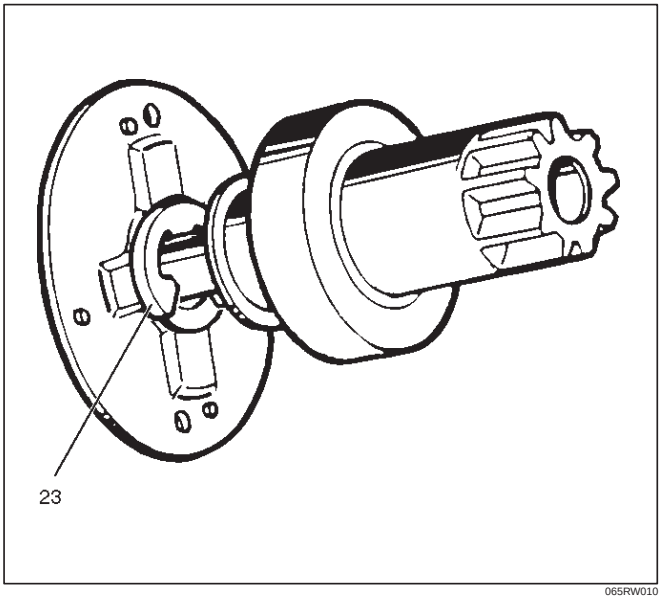

065RW010

23. Holding the pinion shaft, push pinion toward the center bracket and turn the pinion clockwise or counterclockwise by one tooth of spline, then pull off the pinion.
24. Remove thrust washer(24).
25. Remove center bracket
26. Remove pinion shaft.

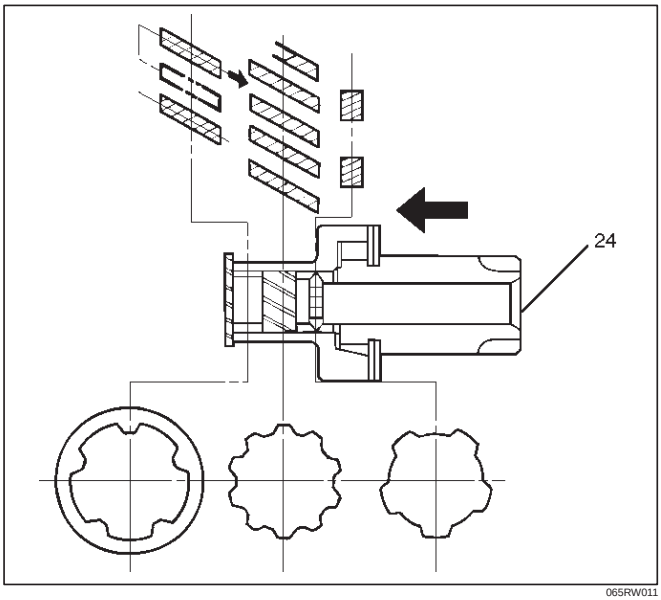

065RW011

Inspection and Repair

Repair or replace necessary parts if extreme wear or damage is found during inspection.

Armature

Measure the outer diameter of commutator, and replace with a new one if it is out of the limit.

Standard: 33.0 mm (1.30 in)

Limit: 32.0 mm (1.26 in)

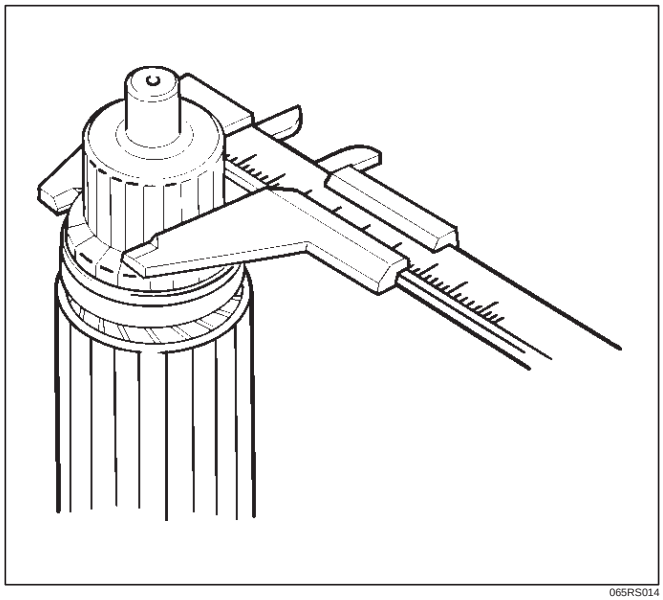

065RS014

Check for continuity between commutator and segment. Replace commutator if there is no continuity (i.e., disconnected).

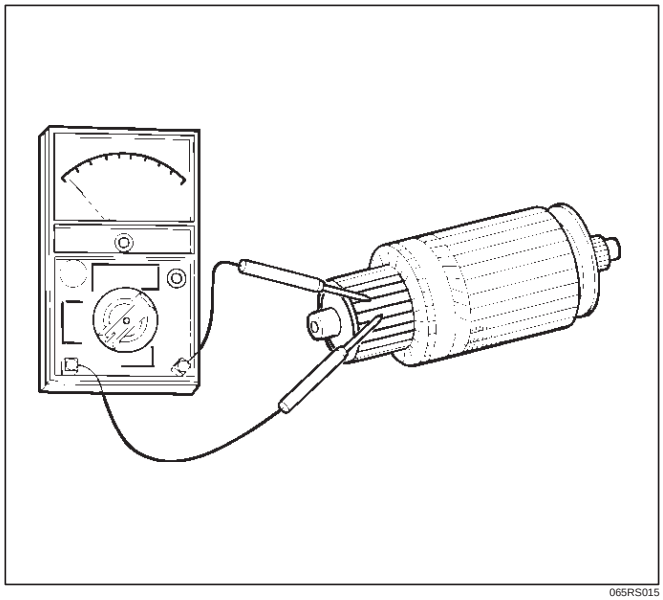

065RS015

Check for continuity between commutator and shaft. Also, check for continuity between commutator and armature core,armature core and shaft. Replace commutator if there is continuity (i.e., internally grounded).

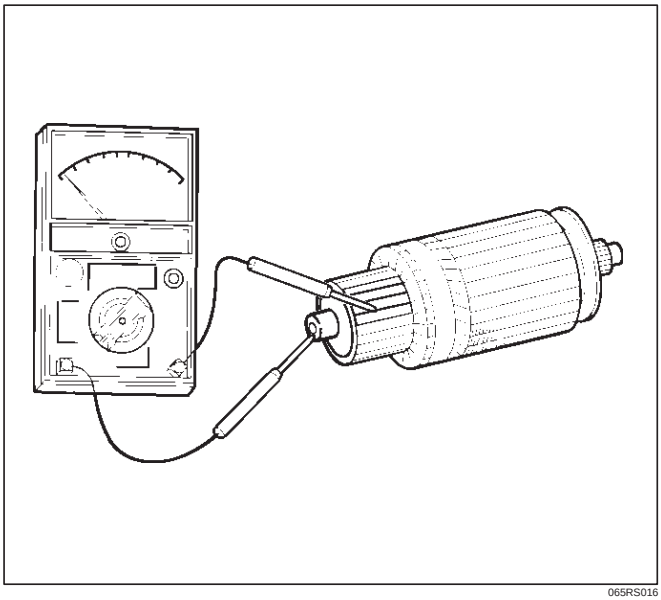

065RS016

Measure runout of armature core and commutator with a dial gauge. Repair or replace, if it exceeds the limit.

Armature

Standard: 0.05 mm (0.002 in) Max.

Limit: 0.10 mm (0.004 in)

Commutator

Standard: 0.05 mm (0.002 in) Max.

Limit: 0.10 mm (0.004 in)

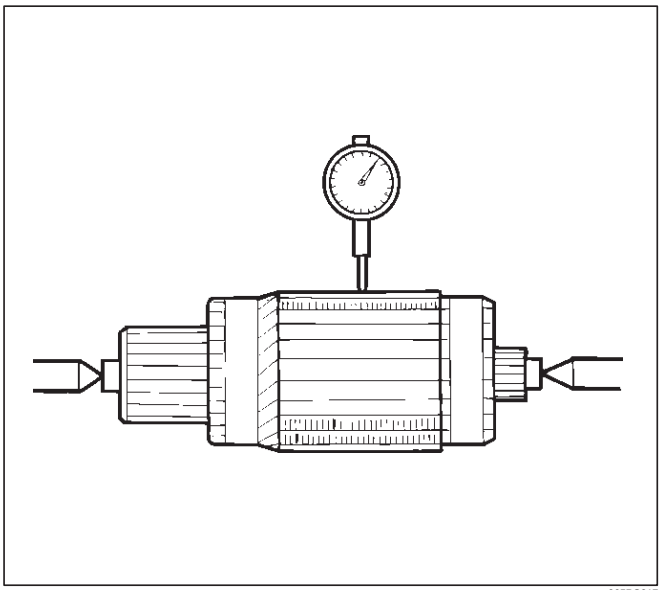

065RS017

Polish the commutator surface with sandpaper #500 to #600 if it is rough.

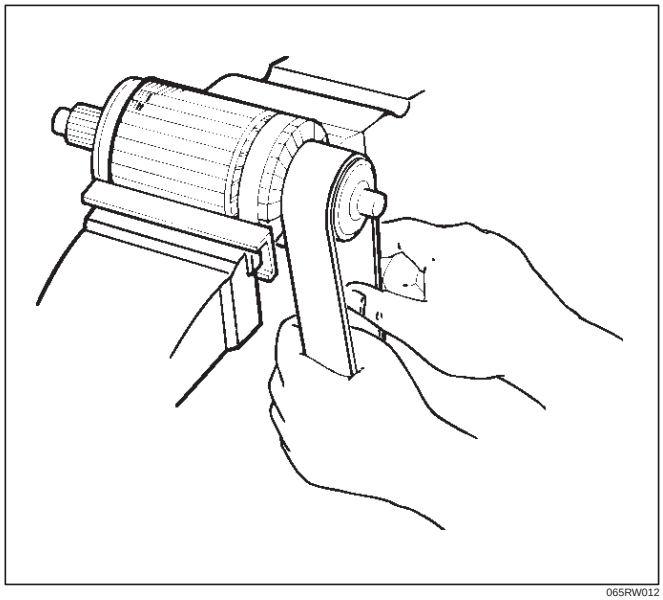

065RW012

Measure the depth of insulator in commutator. Repair, if it is below the limit.

Standard: 0.05 mm to 0.8 mm (0.02 in to 0.03 in)

Limit: 0.2 mm (0.008 in)

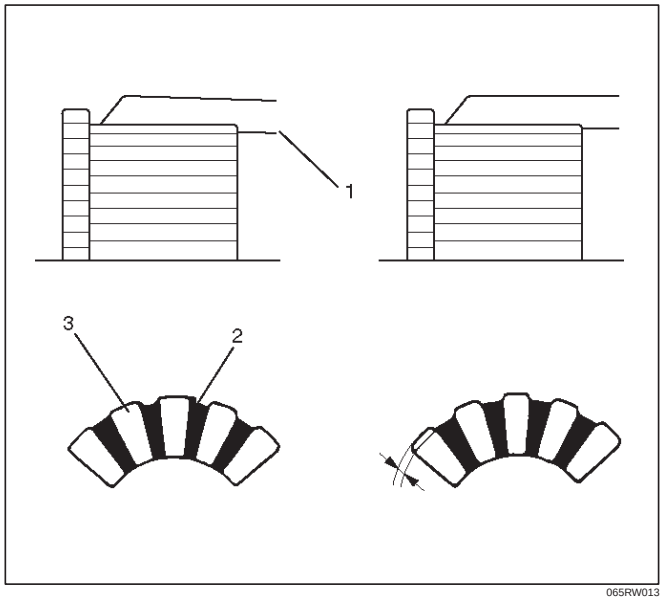

065RW013

Legend

(1) Steel Saw
(2) Insulator
(3) Commutator Segments

Brush

Measure the length of brush.
Replace with a new one, if it is below the limit.

Standard: 16 mm (0.63 in)

Limit: 11 mm (0.43 in)

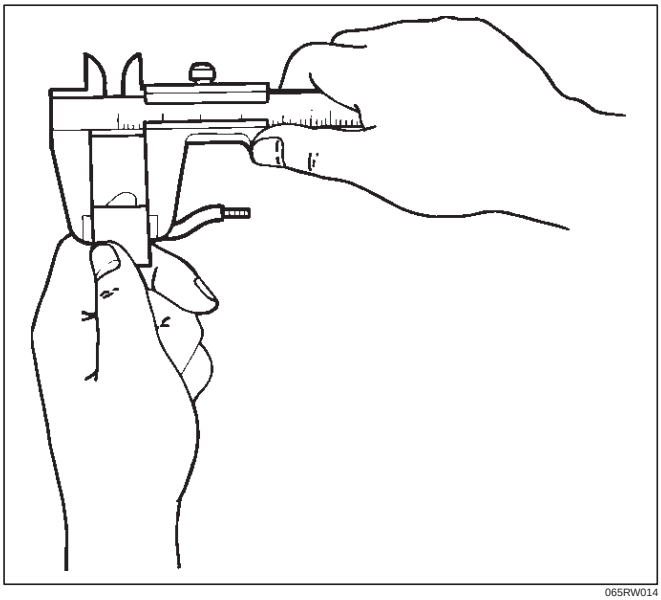

065RW014

Brush Holder

Check for continuity between brush holder (+) (4) and base (–). Replace, if there is continuity (i.e., insulation is broken).

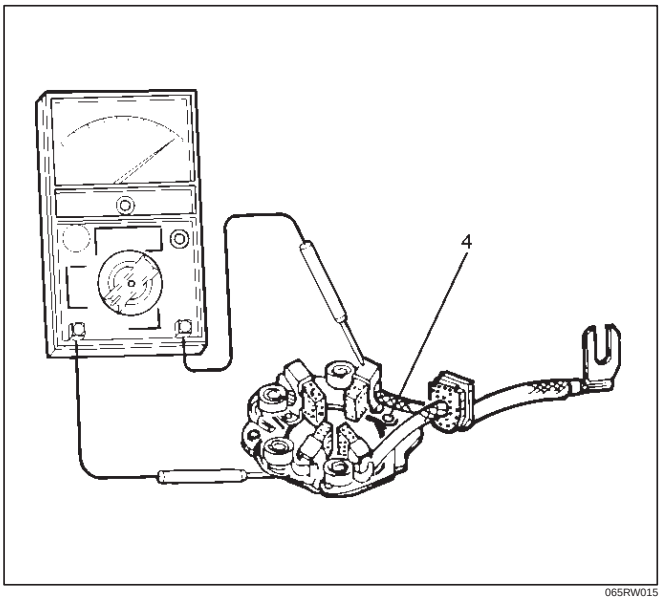

065RW015

Magnetic Switch

Check for continuity of shunt coil between terminals S and M.
Replace, if there is no continuity (i.e., coil is disconnected).

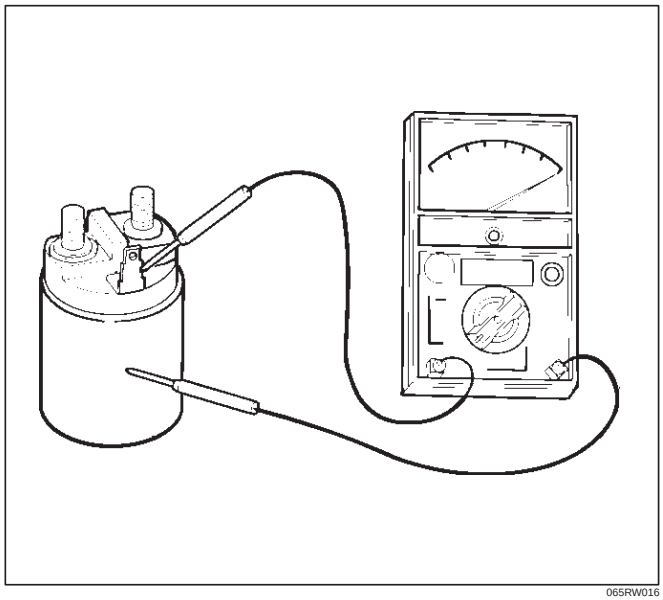

065RW016

Continuity of Series Coil

Check for continuity between terminals S and M.
Replace, if there is no continuity (i.e., coil is disconnected).

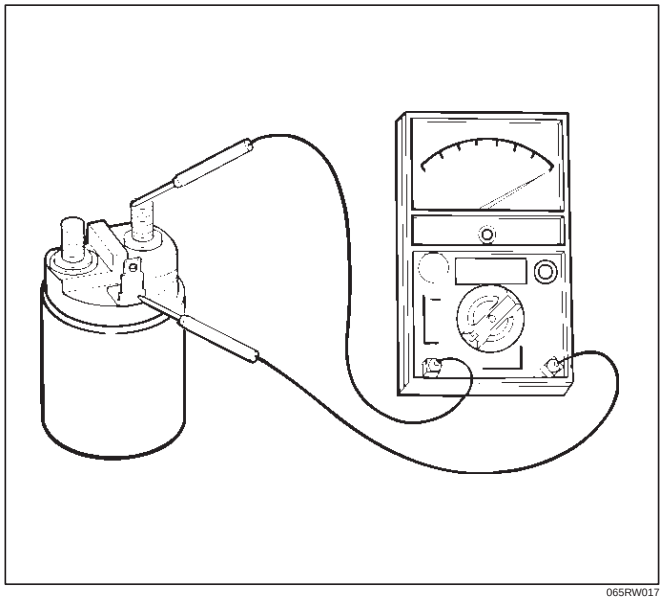

065RW017

Continuity of Contacts

With the plunger faced downward, push down the magnetic switch. In this state, check for continuity between terminals B and M. Replace, if there is no continuity (i.e., contacts are faulty).

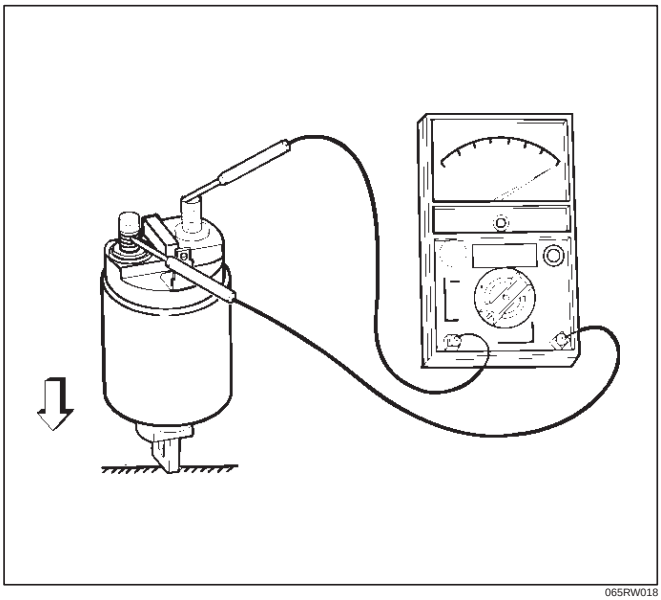

065RW018

Pinion

Check if the pinion rotates smoothly in drive direction by hand, or if it is locked when it is rotated in reverse. If not, replace the pinion.

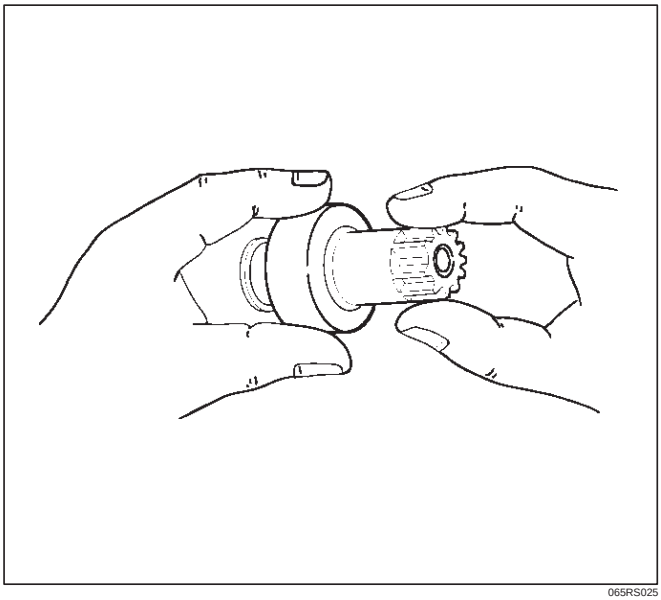

065RS025

Yoke Assembly

Check a magnet inside the yoke.
Replace the yoke assembly if it is broken.

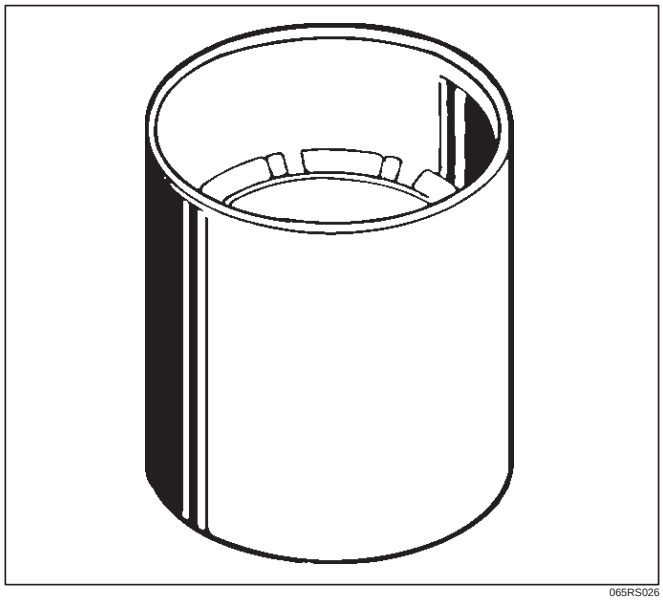

065RS026

Ball Bearing

Clamp the inner race of the ball bearing with your finger, and check for sticking or play when rotating the outer race.
Replace, if abnormality is found.

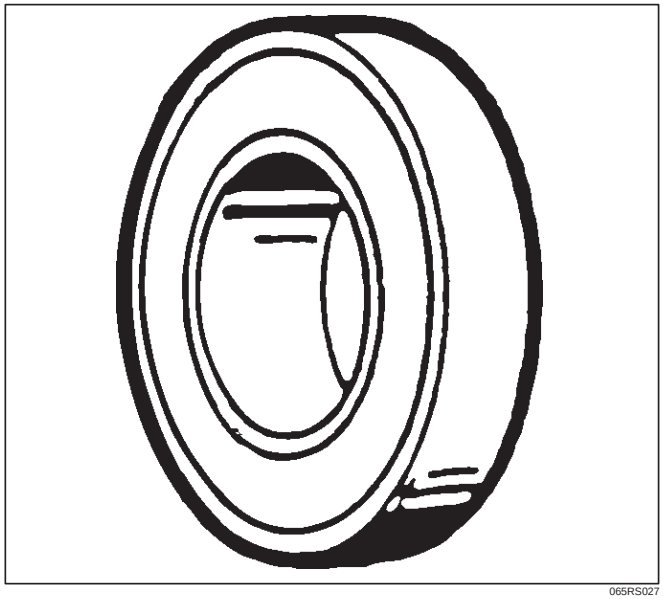

065RS027

Measure inner diameter of bushing in the rear cover, and replace if it exceeds the limit.

Standard: 12.50 mm to 12.527 mm (0.492 in to 0.4932 in)

Limit: 12.60 mm (0.4961 in)

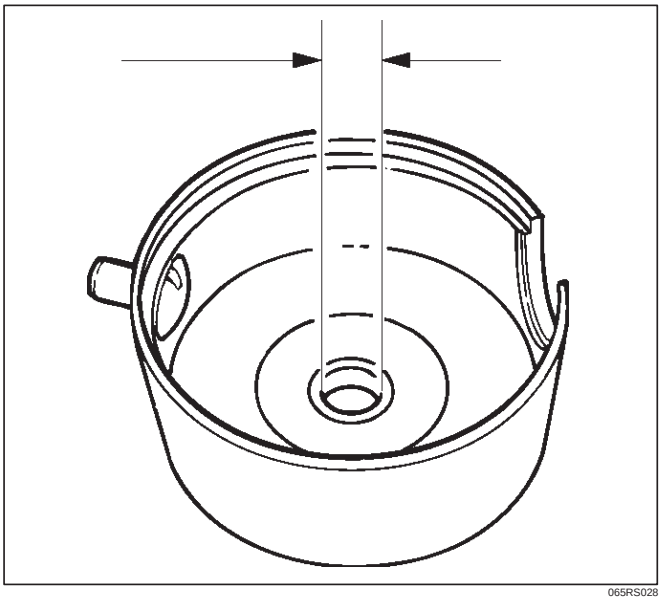

065RS028

Measure inner diameter of bushing in the center bracket (P), and replace if it exceeds the limit.

Standard: 18.01 mm to 18.127 mm (0.7091 in to 0.7137 in)

Limit: 18.15 mm (0.7146 in)

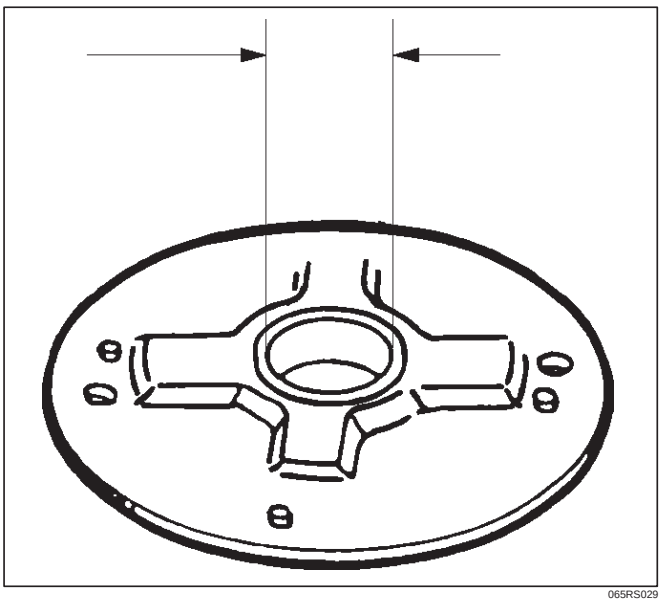

065RS029

Reassembly

To install, follow the removal steps in the reverse order, noting the following points:

Grease application places

- Bushing in rear cover and center bracket
- Gears in reduction gear
- Shift lever operating portion
- Sliding portion of pinion
- Plunger sliding portion of magnetic switch

Reassembling Yoke Assembly

Before reassembly, make sure that no metallic parts attach to the yoke assembly. Because of strong magnetic force, hold the yoke assembly and insert it slowly into the armature.

Torque

Torque for each part (See Torque Specifications in this section)

Pinion Jump–out Dimension

Connect the “+” cable of battery to terminal S and the “–” cable to terminal M. Turn the switch on, and measure pinion travel dimension in thrust direction from the jump–out position.

In measuring the dimension, pull the pinion out a little in the arrow direction.

Dimension(L): 0.05 mm to 1.5 mm (0.002 in to 0.06 in)

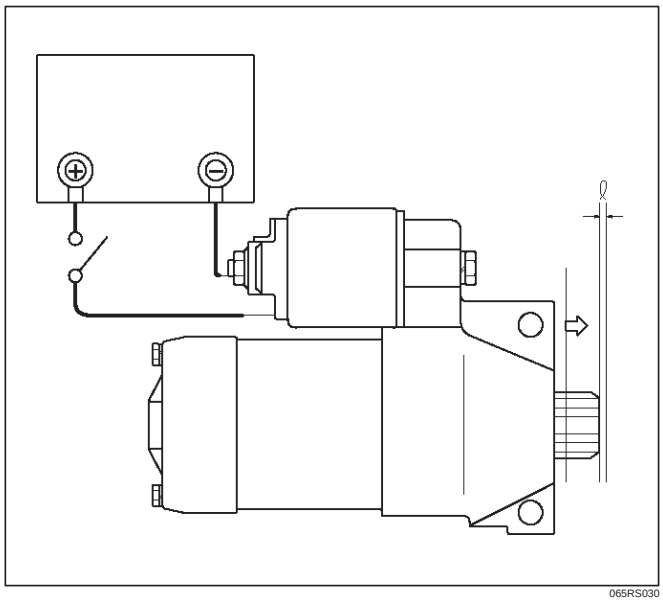

065RS030

If the measured value is out of standard, insert dust cover, or disassemble and adjust.

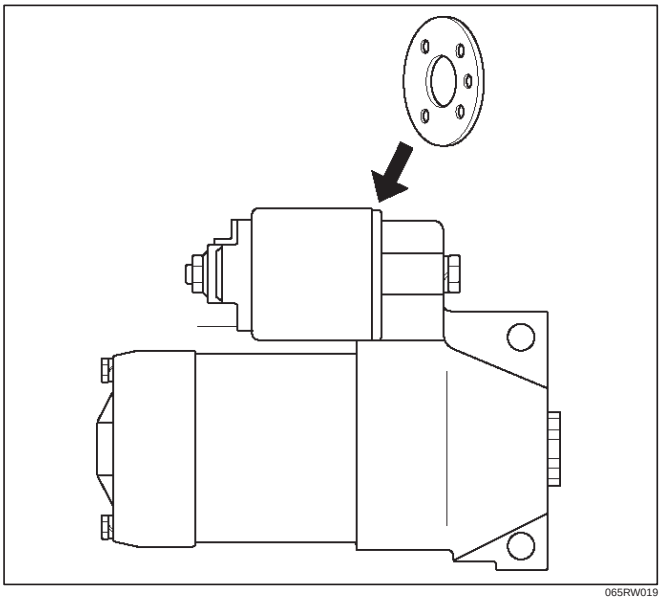

065RW019

Characteristic Test

For easily confirming the characteristics, conduct the no load test as follows:
Rating as short as 30 seconds requires rapid testing.
Fix the starter on the test bench, and wire as shown in illustration. When the switch is closed, the current flows and the starter runs under no load. At this time, measure current, voltage and speed to check if they satisfy the standard.

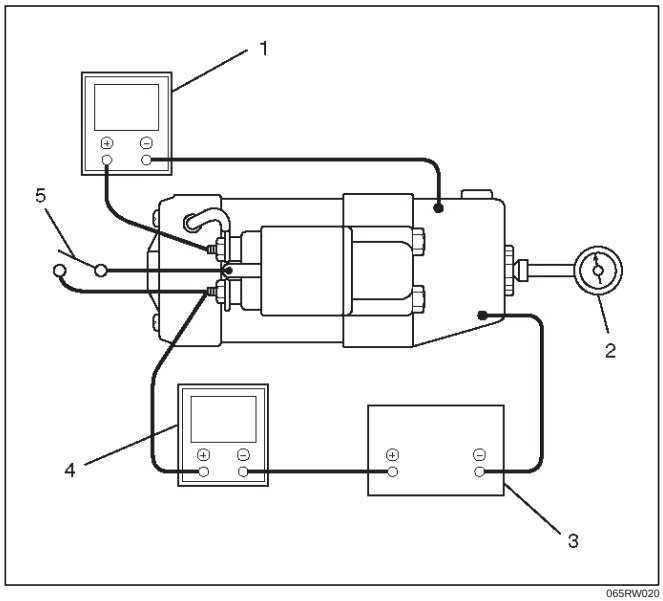

065RW020

Legend

(1) Volt Meter
(2) Tachometer
(3) Battery
(4) Ammeter
(5) Switch

Main Data and Specifications

General Specifications

Model	HITACHI GD002350
Rating	
Voltage	12 V
Output	1.4 Kw
Time	30 sec
Number of teeth of pinion	9
Rotating direction(as viewed from pinion)	Clockwise
Weight(approx.)	34 N
No–load characteristics	
Voltage /Current	11V/90A or less
Speed	2700rpm or more
Load characteristics	
Voltage/current	8.4V/250A
Torque	7.3N·m(64lb·in.) or more
Speed	1200rpm or more
Locking characteristics	
Voltage/current	3V/750A or less
Torque	19N·m(14lb·in) or more

Torque Specifications

N·m (kg·m/ lb·in)

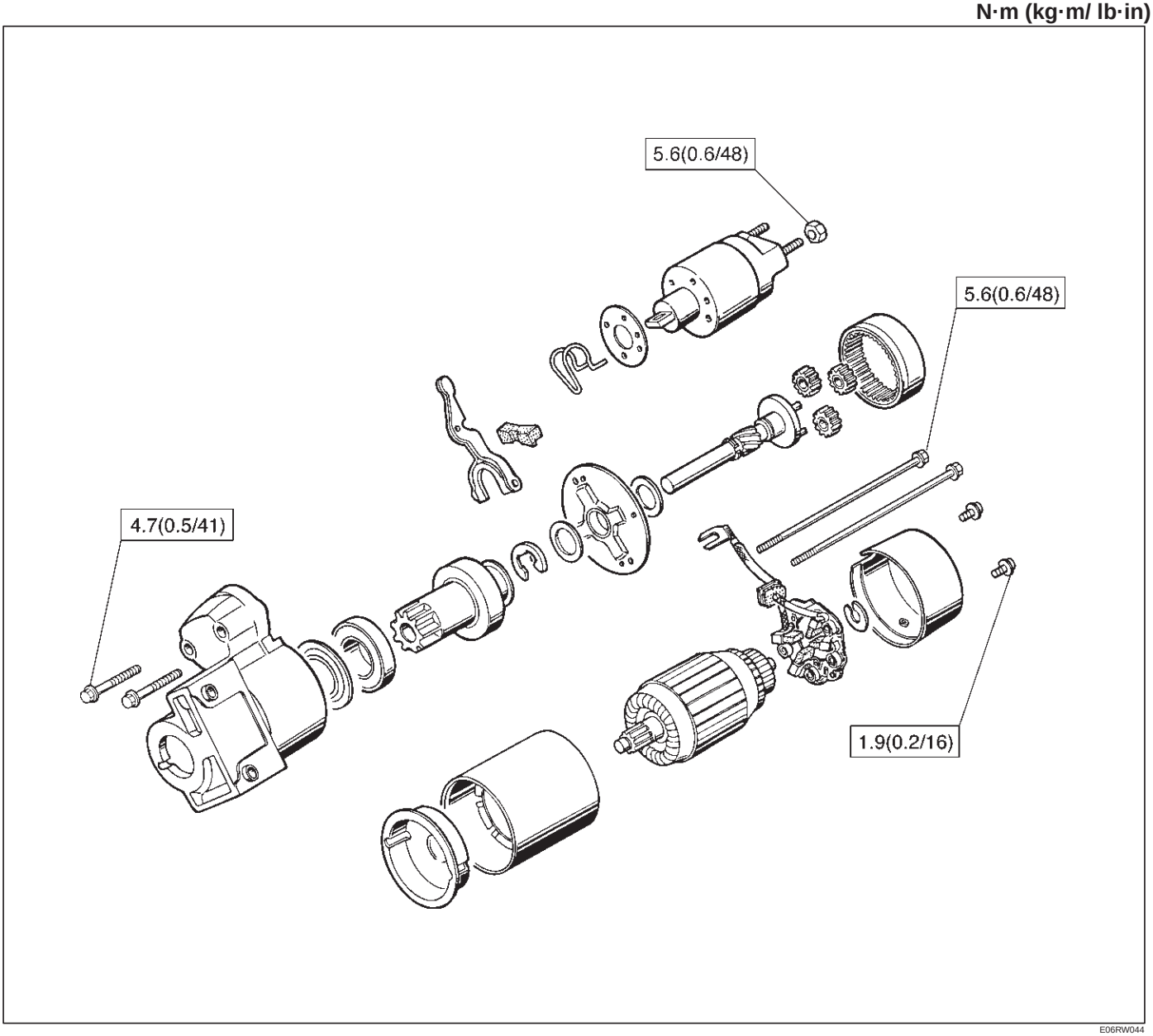

E06RW044

Charging System

General Description

The IC integral regulator charging system and its main components are connected as shown in illustration.
The regulator is a solid state type and it is mounted along with the brush holder assembly inside the generator installed on the rear end cover.
The generator does not require particular maintenance such as voltage adjustment.
The rectifier connected to the stator coil has eight diodes to transform AC voltage into DC voltage.
This DC voltage is connected to the output terminal of generator.

General On–Vehicle Inspection

The operating condition of charging system is indicated by the charge warning lamp. The warning lamp comes on when the starter switch is turned to “ON” position. The charging system operates normally if the lamp goes off when the engine starts.
If the warning lamp shows abnormality or if undercharged or overcharged battery condition is suspected, perform diagnosis by checking the charging system as follows:

1. Check visually the belt and wiring connector.
2. With the engine stopped, turn the stator switch to “ON” position and observe the warning lamp.

   If lamp does not come on:

   Disconnect wiring connector from generator, and ground the terminal “L” on connector side.

   If lamp comes on:

   Repair or replace the generator.

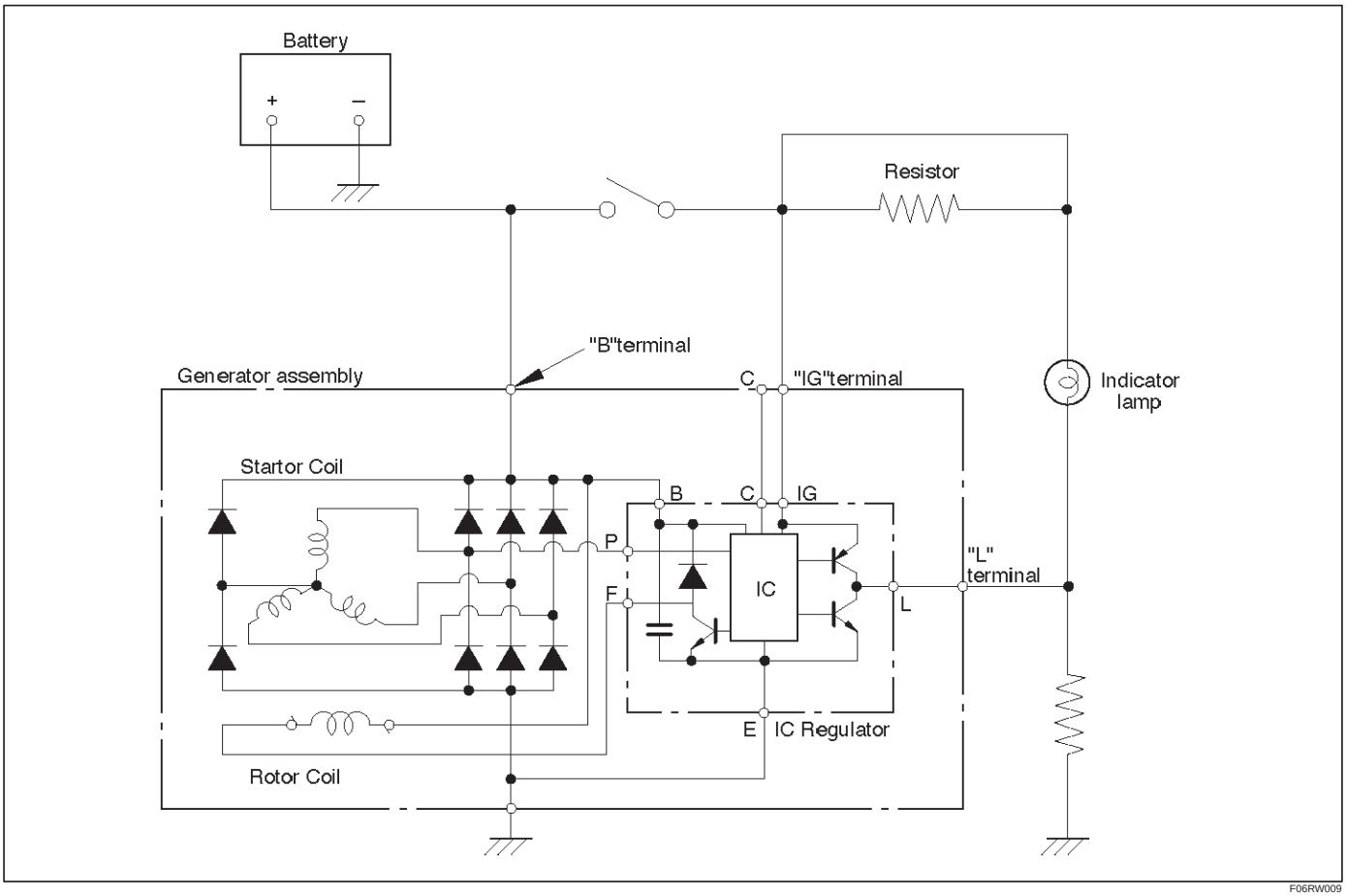

F06RW009

Generator

Removal

1. Disconnect battery ground cable.
2. Move drive belt tensioner to loose side using wrench then remove drive belt (1).
3. Disconnect the wire from terminal “B” and disconnect the connector (4).
4. Remove generator fixing bolt (3).
5. Remove generator assembly (2).

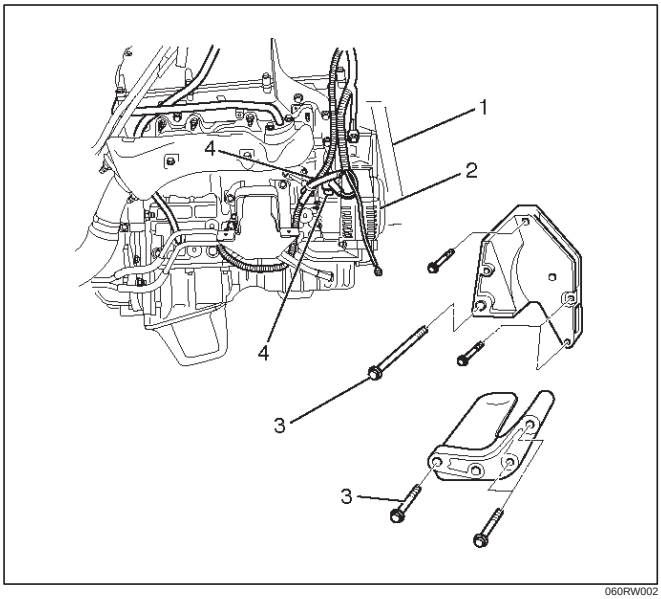

060RW002

Inspection

1. Disconnect the wiring connector from generator.
2. With the engine stopped, turn starter switch to “ON” and connect a voltmeter between connector terminal L (2) and ground or between terminal IG (1) and ground.

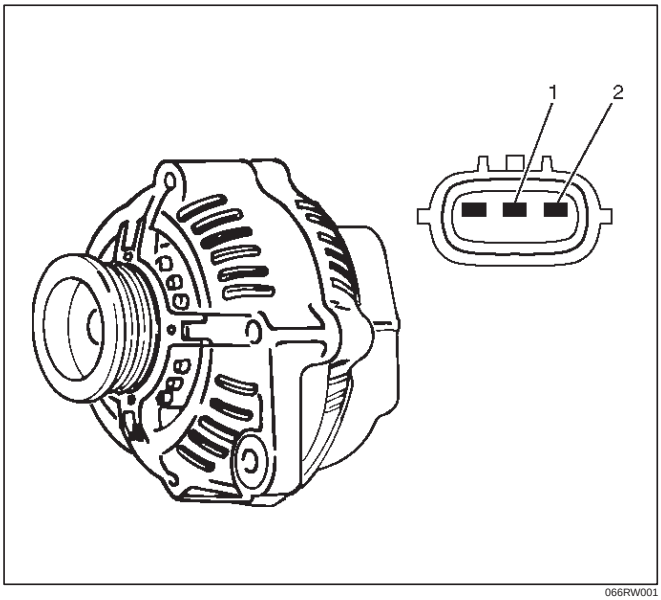

066RW001

If voltage is not present, the line between battery and connector is disconnected and so requires repair.

3. Reconnect the wiring connector to the generator, run the engine at middle speed, and turn off all electrical devices other than engine.
4. Measure battery voltage. If it exceeds 16V, repair or replace the generator.
5. Connect an ammeter to output terminal of generator, and measure output current under load by turning on the other electrical devices (eg., headlights). At this time, the voltage must not be less than 13V.

Installation

1. Install generator assembly to the position to be installed.
2. Install generator assembly and tighten the fixing bolts to the specified torque.

   Torque:

   M10 bolt: 41 N·m (4.2 kg·m/30 lb ft)

   M8 bolt: 21 N·m (2.1 kg·m/15 lb ft)
3. Connect wiring harness connector and direct terminal “B”.
4. Move drive belt tensioner to loose side using wrench, then install drive belt to normal position.
5. Reconnect battery ground cable.

Disassembled View

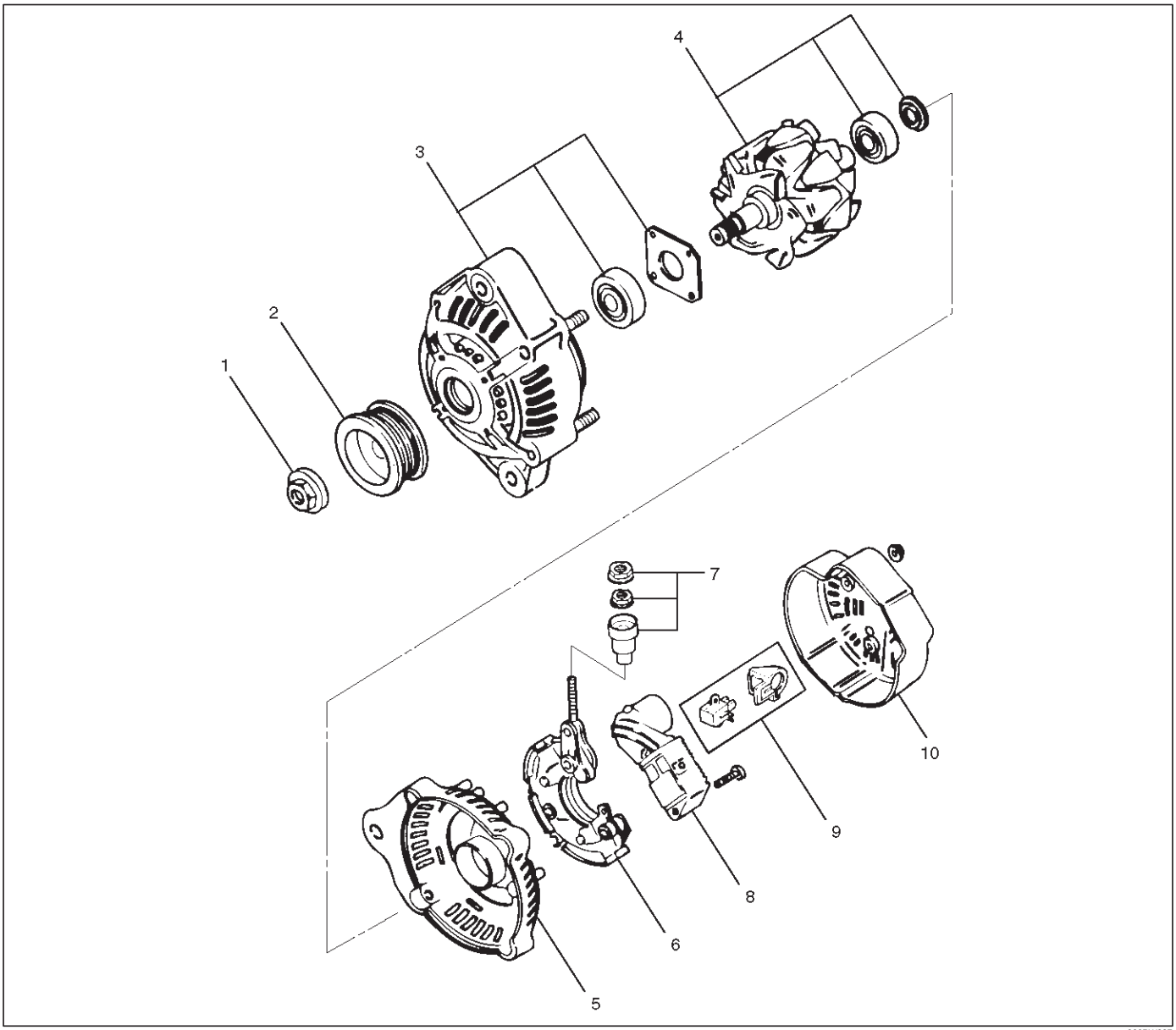

066RW007

Legend

(1) Pulley Nut
(2) Pulley
(3) Front Cover Assembly
(4) Rotor Assembly
(5) Rear End Cover
(6) Rectifier
(7) Terminal Insulator and Nut
(8) Regulator Assembly
(9) Brush Holder Assembly
(10) Rear Cover

Disassembly

1. Terminal insulator and nut(2).

2. Remove three nuts(1) on the rear cover and a nut on terminal B and insulator, then remove the rear cover(3).

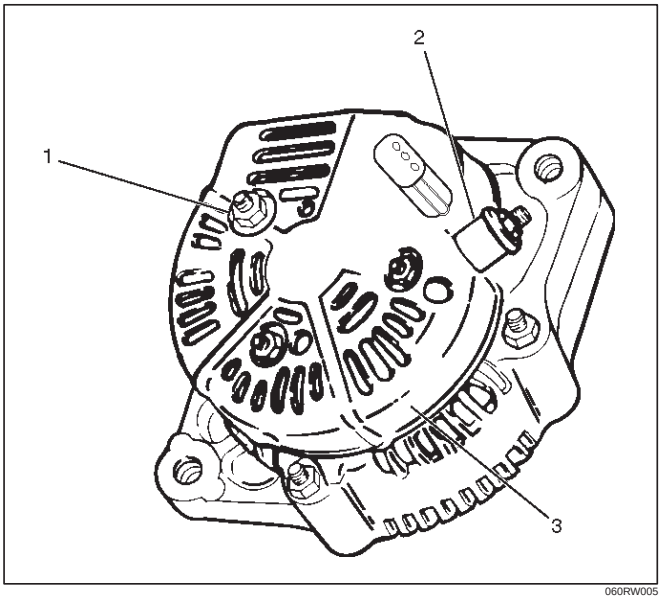

060RW005

3. Remove two screws that fix the brush holder(5) and rectifier, then remove the brush holder assembly(4).

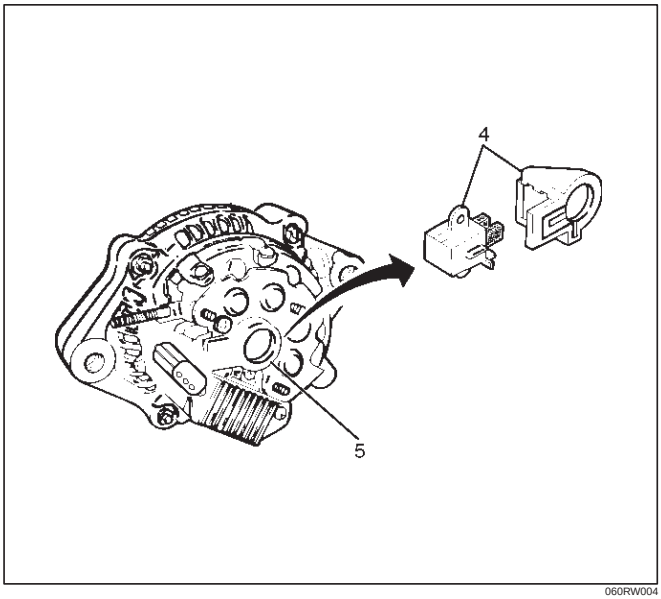

060RW004

4. Remove three screws on the IC regulator, then the IC regulator assembly(6).

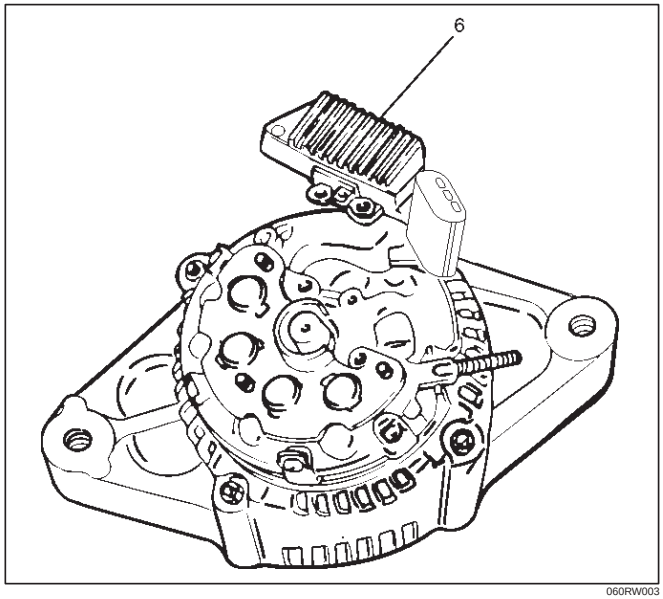

060RW003

5. Remove four screws that fix rectifier(7) and stator lead wires.

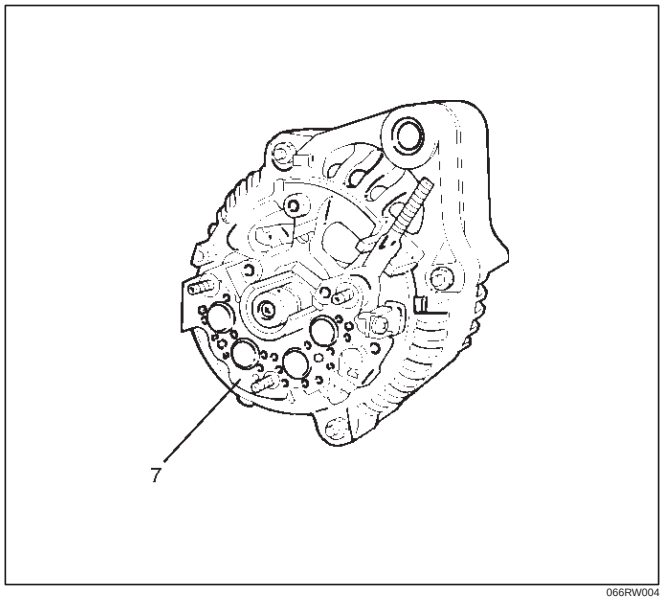

066RW004

6. Secure the pulley directly in the vise between two copper plates, and remove the nut and pulley.

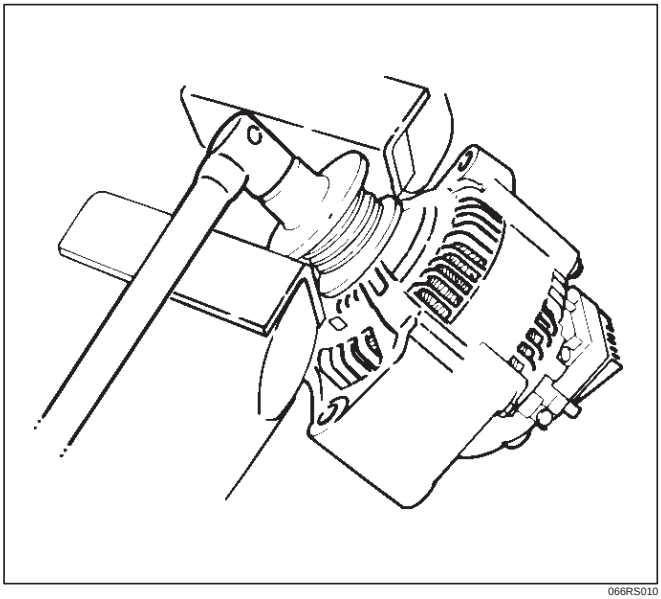

066RS010

7. Remove four nuts(8) that secure the front cover assembly and rear end cover, and an insulator(9).

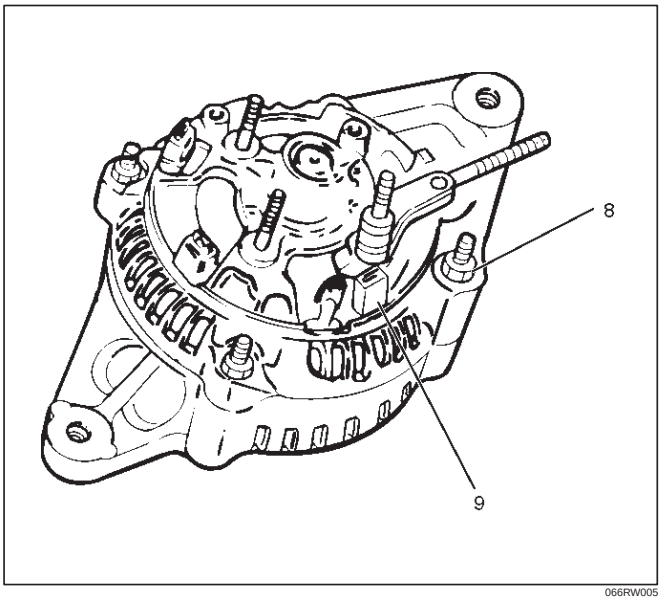

066RW005

8. Use the puller to remove the rear end cover.
9. Rotor assembly

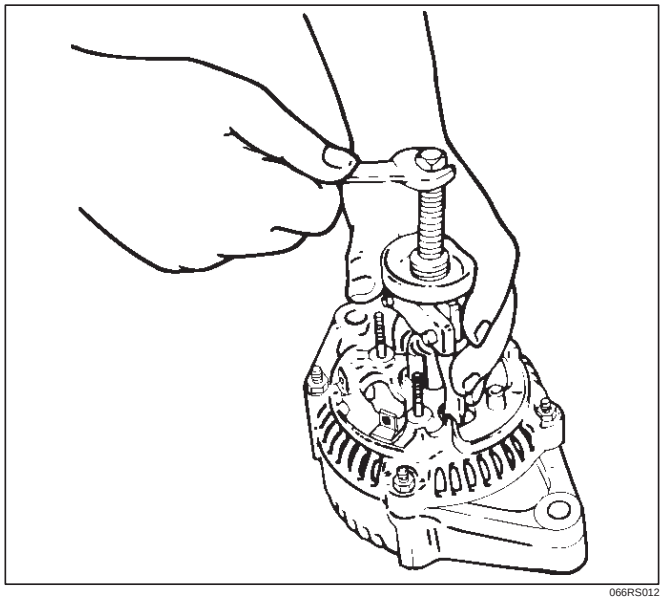

066RS012

10. Pull the rotor assembly(10) off the front cover assembly(12) using a bench press(11).

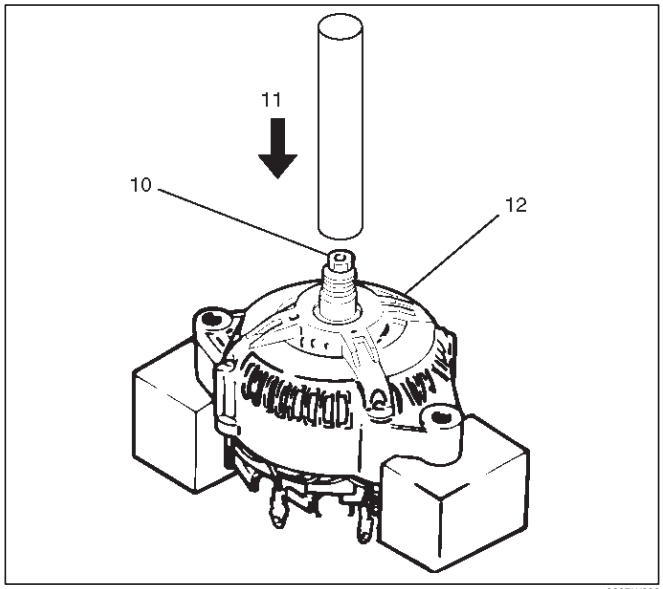

066RW006

Inspection and Repair

Repair or replace necessary parts if extreme wear or damage is found during inspection.

Rotor Assembly

1. Check the rotor slip ring surfaces for contamination and roughness. If rough, polish with #500—600 sandpaper.

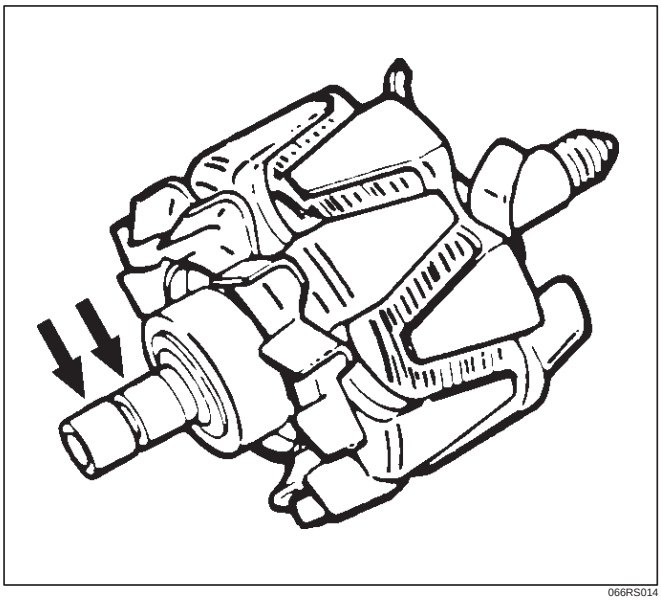

066RS014

2. Measure the slip ring diameter, and replace if it exceeds the limit.

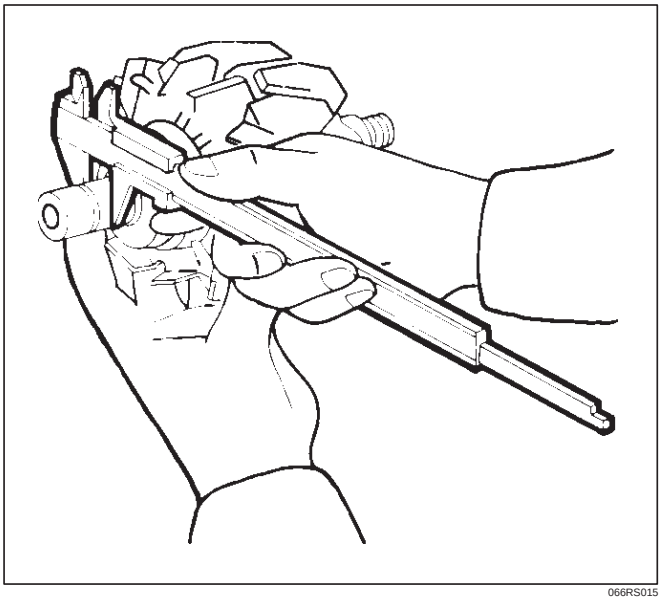

066RS015

3. Check resistance between slip rings, and replace if there is no continuity.

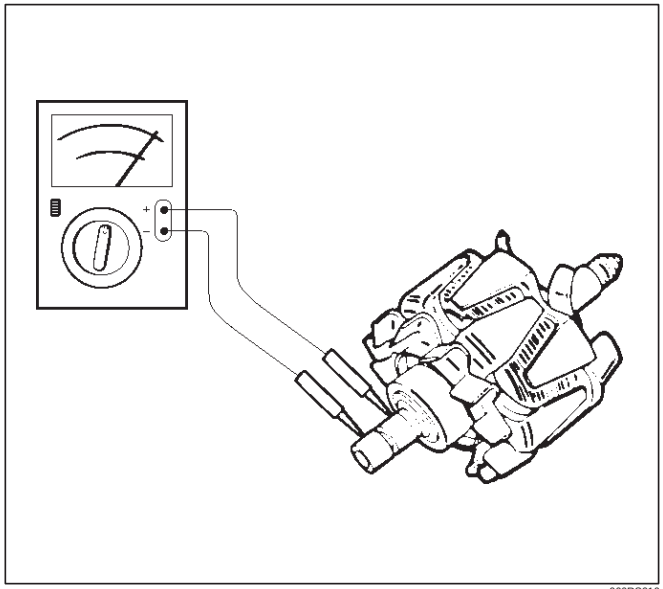

066RS016

4. Check for continuity between slip ring and rotor core. In case of continuity, replace the rotor assembly.

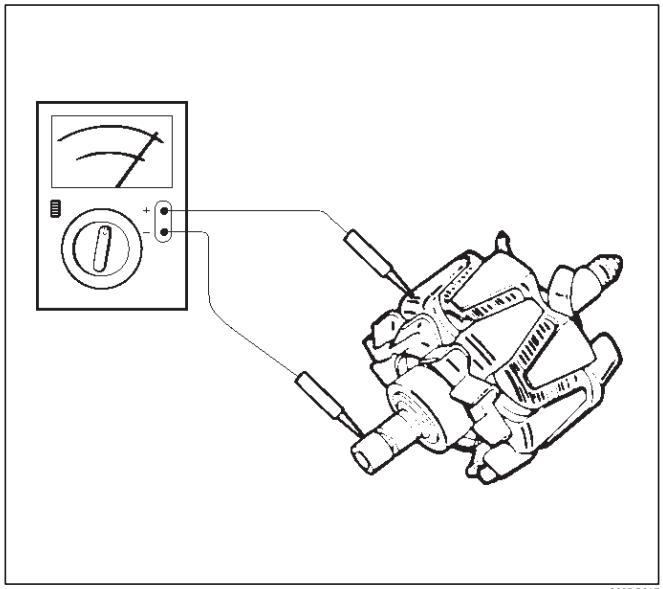

066RS017

Stator Coil

1. Measure resistance between respective phases.
2. Measure insulation resistance between stator coil and core with a mega–ohmmeter.
   If less than standard, replace the coil.

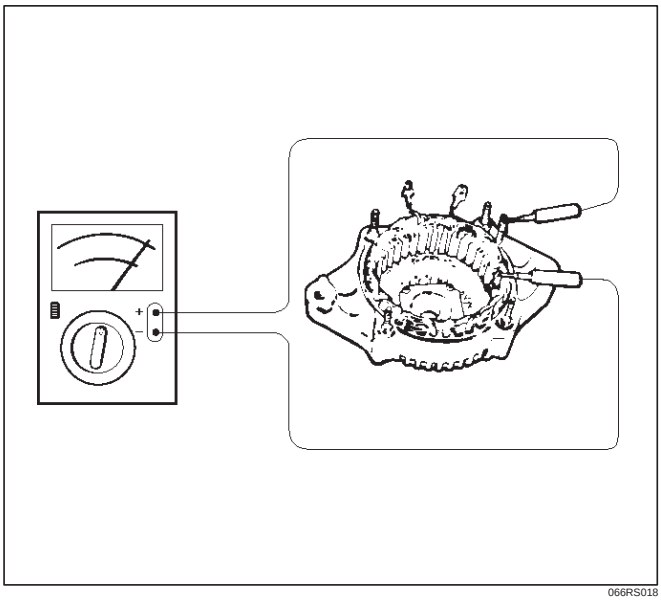

066RS018

Brush

Measure the brush length.
If more than limit, replace the brush.

Standard: 10.mm (0.4134 in)

Limit: 8.4.mm (0.3307 in)

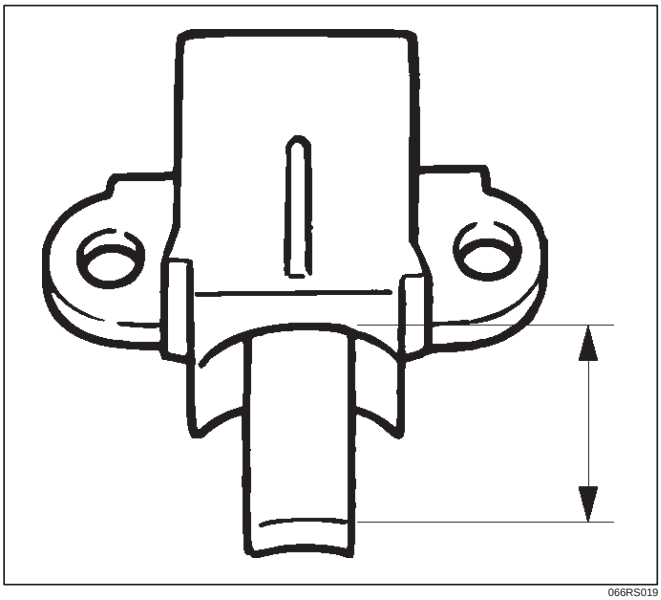

066RS019

Rectifier Assembly

Check for continuity across “P” and “E” in the × 100W range of multimeter.

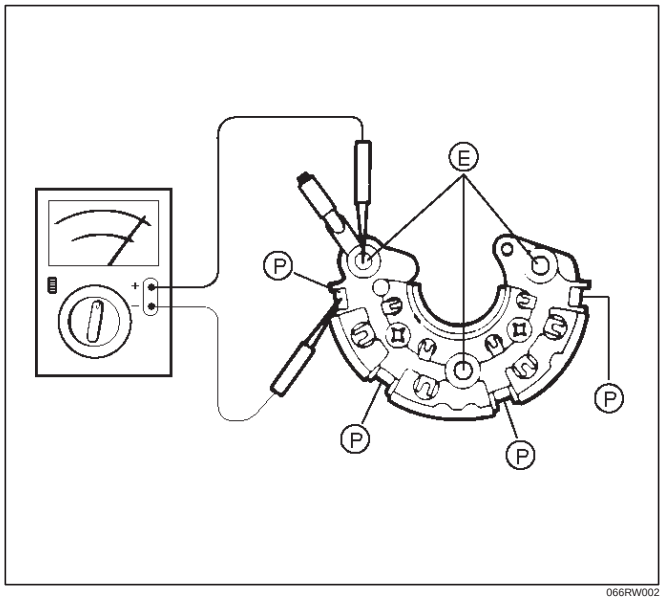

066RW002

Change polarity, and make sure that there is continuity in one direction, and not in the reverse direction. In case of continuity in both directions, replace the rectifier assembly.

IC Regulator Assembly

Check for continuity across “B” and “F” in the × 100W range of multimeter.

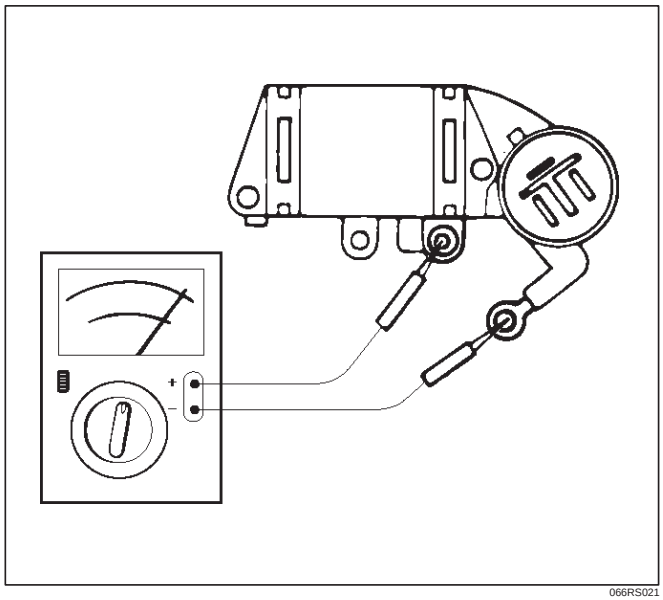

066RS021

Change polarity, and make sure that there is continuity in one direction, and not in the reverse direction. In case of continuity in both directions, replace the IC regulator assembly.

Reassembly

To reassemble, follow the disassembly steps in the reverse order, noting the following points:

1. Using a press with a socket wrench attached, reassemble rotor and rear end cover assembly in the front cover.

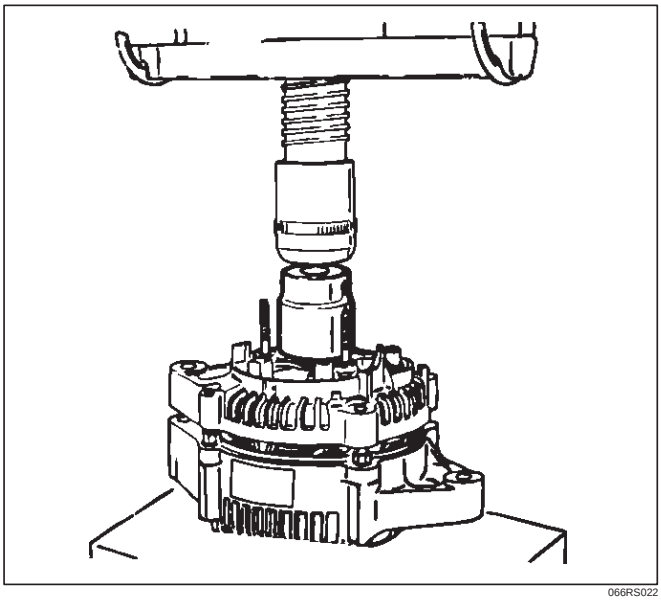

066RS022

2. Install pulley on the rotor.
   Secure the pulley directly in the vise between two copper plates, and tighten nut to the specified torque.

Torque: 111 N·m (11.3 kg·m/82 lb ft)

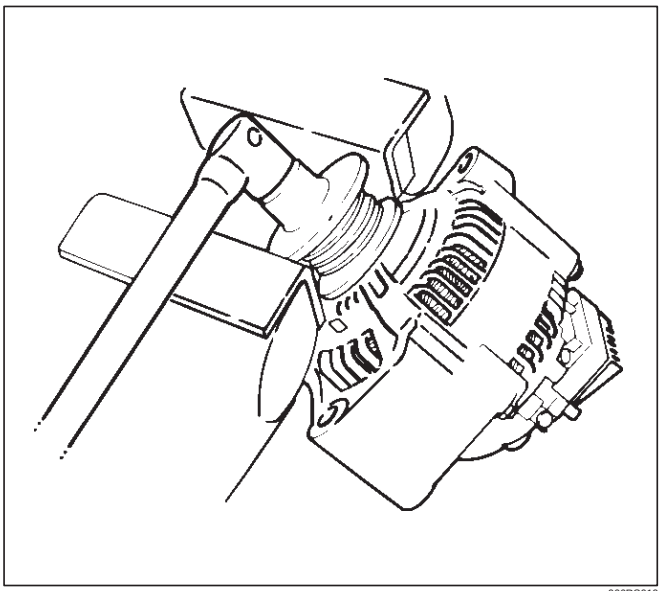

066RS010

Bench Test

Conduct a bench test of the generator.

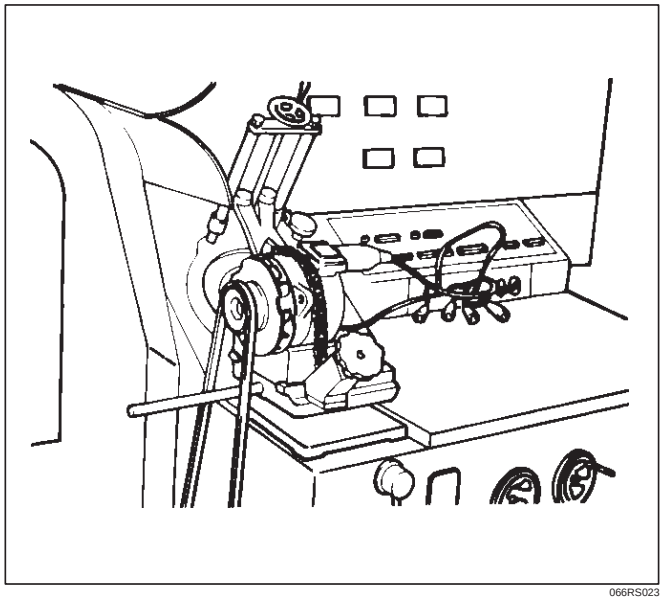

066RS023

Preparation

Remove generator from the vehicle (see “Generator removal”).

1. Secure generator to the bench test equipment and connect wires.
   Terminal “IG” for energization
   Terminal “L” for neutral (warning lamp)
   Terminal “B” for output
2. Conduct the generator characteristic test.
   Characteristics of generator are shown in illustration.
   Repair or replace the generator if its outputs are abnormal.

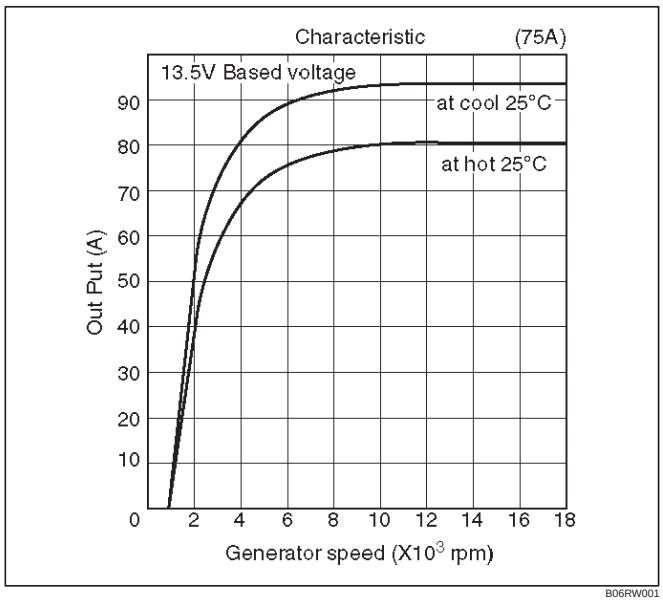

B06RW001

Main Data and Specifications

General Specifications

Parts Number (Nippon denso)	102211—5140
Model	ACHD04
Rated voltage	12 V
Rated output	75 A
Rotating direction (As viewed from pulled)	Clockwise
Pulley effective diameter	50 mm (1.97 in)
Weight	44 N (4.5 kg 33 lb)

ENGINE

3.2L ENGINE DRIVEABILITY AND EMISSIONS

CONTENTS

Specification 6E–4
Tightening Specifications 6E–4
Diagrams and Schematics 6E–5
ECM Wiring Diagram (1 of 6) 6E–5
ECM Wiring Diagram (2 of 6) 6E–6
ECM Wiring Diagram (3 of 6) 6E–7
ECM Wiring Diagram (4 of 6) 6E–8
ECM Wiring Diagram (5 of 6) 6E–9
ECM Wiring Diagram (6 of 6) 6E–10
ECM Pinouts 6E–11
ECM Pinout Table, 40-Way Connector – “A” 6E–11
ECM Pinout Table, 40-Way Connector – “B” 6E–12
Component Locators 6E–13
Engine Component Locator Table 6E–14
Undercarriage Component Locator 6E–15
Undercarriage Component Locator Table . 6E–15
Sensors and Miscellaneous Component Locators 6E–16
Fuse and Relay Panel (Underhood Electrical Center) 6E–18
Diagnosis 6E–19
Strategy-Based Diagnostics 6E–19
Strategy-Based Diagnostics 6E–19
DTC Stored 6E–19
No DTC 6E–19
No Matching Symptom 6E–19
Intermittents 6E–19
No Trouble Found 6E–19
Verifying Vehicle Repair 6E–19
General Service Information 6E–20
Maitenance Schedule 6E–20
Visual/Physical Engine Compartment Inspection 6E–20
Basic Knowledge of Tools Required 6E–20
Seral Data Communications 6E–21
Class II Serial Data Communications 6E–21
On-Board Diagnostic (OBD) 6E–21
On-Board Diagnostic Tests 6E–21
Comprehensive Component Monitor Diagnostic Operation 6E–21
System Status and Drive Cycle for Satisfying Federal Inspection/Maintenance (I/M 240) Regulations 6E–22
Common OBD Terms 6E–22
The Diagnostic Executive 6E–22
DTC Types 6E–23
Verifying Vehicle Repair 6E–24
Reading Flash Diagnostic Trouble Codes . 6E–24
Reading Diagnostic Trouble Codes Using a TECH 2 . . . . . 6E–25
On-Board Diagnosis (Self-Diagnosis) 6E–25
Tech 2 Scan Tool 6E–27
Getting Started 6E–28
DTC Modes 6E–30
DTC Information Mode 6E–30
Primary System-Based Diagnostics 6E–30
Primary System-Based Diagnostics 6E–30
Fuel Control Heated Oxygen Sensors 6E–30
HO2S Heater 6E–30
Fuel Trim System Monitor Diagnostic Operation 6E–31
On-Board Diagnostic (OBD) System Check . 6E–32
A/C Clutch Control Circuit Diagnosis 6E–34
Electronic Ignition System Diagnosis 6E–40
Visual Check of The Evaporative Emission Canister 6E–40
Fuel Metering System Check 6E–40
Idle Air Control (IAC) Valve 6E–40
Fuel System Pressure Test 6E–40
Fuel Injector Coil Test Procedure and Fuel Injector Balance Test Procedure 6E–40
Engine Control Module ECM Diagnosis 6E–45
Multiple ECM Information Sensor DTCS Set 6E–45
Tech 2 Data Definitions and Ranges 6E–48
Typical Scan Data Values 6E–49
No Malfunction Indicator Lamp (MIL) 6E–53
Malfunction Indicator Lamp (MIL) “ON” Steady 6E–56
Engine Cranks But Will Not Run 6E–59
Fuel System Electrical Test 6E–64
Fuel System Diagnosis 6E–67
Idle Air Control (IAC) System Check 6E–72
Barometric Pressure (BARO) Output Check 6E–75
ECM Diagnostic Trouble Codes 6E–77
Diagnostic Trouble Code (DTC) P0101 (Flash DTC=61) MAF System Performance 6E–79
Diagnostic Trouble Code (DTC) P0102 (Flash DTC=61) MAF Sensor Circuit Low Frequency 6E–82
Diagnostic Trouble Code (DTC) P0103 (Flash DTC=61) MAF Sensor Circuit High Frequency 6E–85

Diagnostic Trouble Code (DTC) P0107 (Flash DTC=33) BARO Sensor Circuit Low Voltage 6E–87
Diagnostic Trouble Code (DTC) P0108 (Flash DTC=33) BARO Sensor Circuit Hight Voltage 6E–90
Diagnostic Trouble Code (DTC) P0112 (Flash DTC=23) IAT Sensor Circuit Low Voltage . . 6E–93
Diagnostic Trouble Code (DTC) P0113 (Flash DTC=23) IAT Sensor Circuit High Voltage . . 6E–96
Diagnostic Trouble Code (DTC) P0117 (Flash DTC=14) ECT Sensor Circuit Low Voltage . 6E–99
Diagnostic Trouble Code (DTC) P0118 (Flash DTC=14) ECT Sensor Circuit High Voltage . 6E–101
Diagnostic Trouble Code (DTC) P0121 (Flash DTC=21) TP System Performance 6E–104
Diagnostic Trouble Code (DTC) P0122 (Flash DTC=21) TP Sensor Circuit Low Voltage . . . 6E–107
Diagnostic Trouble Code (DTC) P0123 (Flash DTC=21) TP Sensor Circuit High Voltage . . 6E–110
Diagnostic Trouble Code (DTC) P0131 (Flash DTC=15) HO2S Circuit Low Voltage 6E–113
Diagnostic Trouble Code (DTC) P0132 (Flash DTC) HO2S Circuit High Voltage 6E–116
Diagnostic Trouble Code (DTC) P0134 (Flash DTC=15) HO2S Circuit Insufficient Activity . 6E–119
Diagnostic Trouble Code (DTC) P0171 (Flash DTC=44) Fuel Trim System Too Lean 6E–122
Diagnostic Trouble Code (DTC) P0172 (Flash DTC=45) Fuel Trim System Rich 6E–126
Diagnostic Trouble Code (DTC) P0201 (Flash DTC=31) Injector 1 Control Circuit 6E–130
Diagnostic Trouble Code (DTC) P0202 (Flash DTC=31) Injector 2 Control Circuit 6E–133
Diagnostic Trouble Code (DTC) P0203 Injector 3 Control Circuit 6E–136
Diagnostic Trouble Code (DTC) P0204 (Flash DTC=31) Injector 4 Control Circuit 6E–139
Diagnostic Trouble Code (DTC) P0205 (Flash DTC=31) Injector 5 Control Circuit 6E–142
Diagnostic Trouble Code (DTC) P0206 (Flash DTC=31) Injector 6 Control Circuit 6E–145
Diagnostic Trouble Code (DTC) P0336 (Flash DTC=29) CKP Reference Signal Circuit . . . 6E–148
Diagnostic Trouble Code (DTC) P0337 (Flash DTC=29) CKP Sensor Circuit Low Frequency 6E–150
Diagnostic Trouble Code (DTC) P0341 (Flash DTC=41) CMP Sensor Circuit Performamce 6E–152
Diagnostic Trouble Code (DTC) P0342 (Flash DTC=41) CMP Sensor Circuit Low 6E–155
Diagnostic Trouble Code (DTC) P0351 Ignition 1 Control Circuit 6E–159
Diagnostic Trouble Code (DTC) P0352 (Flash DTC=42) Ignition 2 Control Circuit 6E–162
Diagnostic Trouble Code (DTC) P0353 (Flash DTC=42) Ignition 3 Control Circuit 6E–165
Diagnostic Trouble Code (DTC) P0354 (Flash DTC=42) Ignition 4 Control Circuit 6E–168
Diagnostic Trouble Code (DTC) P0355 (Flash DTC=42) Ignition 5 Control Circuit 6E–171
Diagnostic Trouble Code (DTC) P0356 (Flash DTC=42) Ignition 6 Control Circuit 6E–174
Diagnostic Trouble Code (DTC) P0502 (Flash DTC=24) VSS No Signal 6E–177
Diagnostic Trouble Code (DTC) P0562 (Flash DTC=66) System Voltage Low 6E–180
Diagnostic Trouble Code (DTC) P0563 (Flash DTC=66) System Voltage High 6E–181
Diagnostic Trouble Code (DTC) P0601 (Flash DTC=51) ECM Memory 6E–182
Diagnostic Trouble Code (DTC) P1171 (Flash DTC=44) Fuel System Lean Dueing Acceleration 6E–183
Diagnostic Trouble Code (DTC) P1508 (Flash DTC=22) IAC System Low RPM 6E–186
Diagnostic Trouble Code (DTC) P1509 (Flash DTC=22) IAC System High RPM 6E–189
Symptom Diagnosis 6E–192
Default Matrix Table 6E–215
Camshaft Position (CMP) Sensor 6E–218
Crankshaft Position (CKP) Sensor 6E–219
Engine Coolant Temperature (ECT) Sensor . 6E–219
Heated Oxygen Sensor (HO2S) 6E–220
Intake Air Temperature (IAT) Sensor 6E–222
Mass Air Flow (MAF) Sensor 6E–222
Barometric Pressure (BARO) Sensor 6E–223
Malfunction Indicator Lamp (MIL) 6E–223
Engine Control Module (ECM) 6E–223
EEPROM 6E–224
Power Steering Pressure (PSP) Switch 6E–224
Throttle Position (TP) Sensor 6E–225
Vehicle Speed Sensor (VSS) 6E–226
Air Cleaner/Air Filter 6E–227
Idle Air Control (IAC) Valve 6E–228
Common Chamber 6E–229
Accelerator Cable Assembly 6E–229
Accelerator Pedal Replacement 6E–231
Fuel Fillter Cap 6E–233
Fuel Filter 6E–233
Fuel Gauge Unit 6E–235
Fuel Injectors 6E–235
Fuel Pressure Regulator 6E–236
Fuel Metering System 6E–238
Fuel Pump Assembly 6E–238
Fuel Pump Relay 6E–238
Fuel Rail Assembly 6E–239
Fuel Tank 6E–240
Throttle Body (TB) 6E–240
Electronic Ignition System 6E–241
Catalytic Converter 6E–242
Air Conditioning Relay 6E–242

EVAP Canister Hoses 6E–242
EVAP Canister 6E–242
EVAP Canister Purge Solenoid 6E–243
Fuel Tank Vent Valve 6E–244
Positive Crankcase Ventilation (PCV) Valve . 6E–244
Wiring and Connectors 6E–244
Wire Harness Repair: Twisted Shielded Cable 6E–245
Twisted Leads 6E–245
Weather-Pack Connector 6E–247
Com-Pack III 6E–248
Metri-Pack 6E–248
General Description (ECM and Sensors) . . . 6E–250
General Description (Air Induction) 6E–255
General Description (Fuel Metering) 6E–255
General Description (Electronic Ignition System) 6E–258
A/C Clutch Diagnosis 6E–261
General Description (Evaporative (EVAP) Emission System) 6E–262
Diagnosis 6E–263
Special Tools 6E–265

Specification

Tightening Specifications

Application	N·m	Kg·m	Lb Ft.	Lb In.
Camshaft Position Sensor Retaining Screw	9	0.9	—	78
Crankshaft Position Sensor Mounting Bolt	9	0.9	—	78
Engine Coolant Temperature Sensor	30	3.1	22	—
Fuel Pressure Regulator Attaching Screw	6.5	0.7	—	56
Fuel Rail Bolts	7	0.7	—	61
Heated Oxygen Sensor	55	5.6	41	—
Lower Intake Manifold to Engine Block Nuts	25	2.6	18	—
Spark Plugs	18	1.8	13	—
Throttle Body Mounting Bolts	13	1.3	—	113
Upper Intake Manifold to Lower Intake Manifold Bolts	25	2.5	18	—
VSS Retaining Bolt	13	1.3	—	113
Engine Control Module Bolts	10	1.0	—	87
Mass Air Flow Sensor Screw	1.5	0.15	—	13

Diagrams and Schematics

ECM Wiring Diagram (1 of 6)

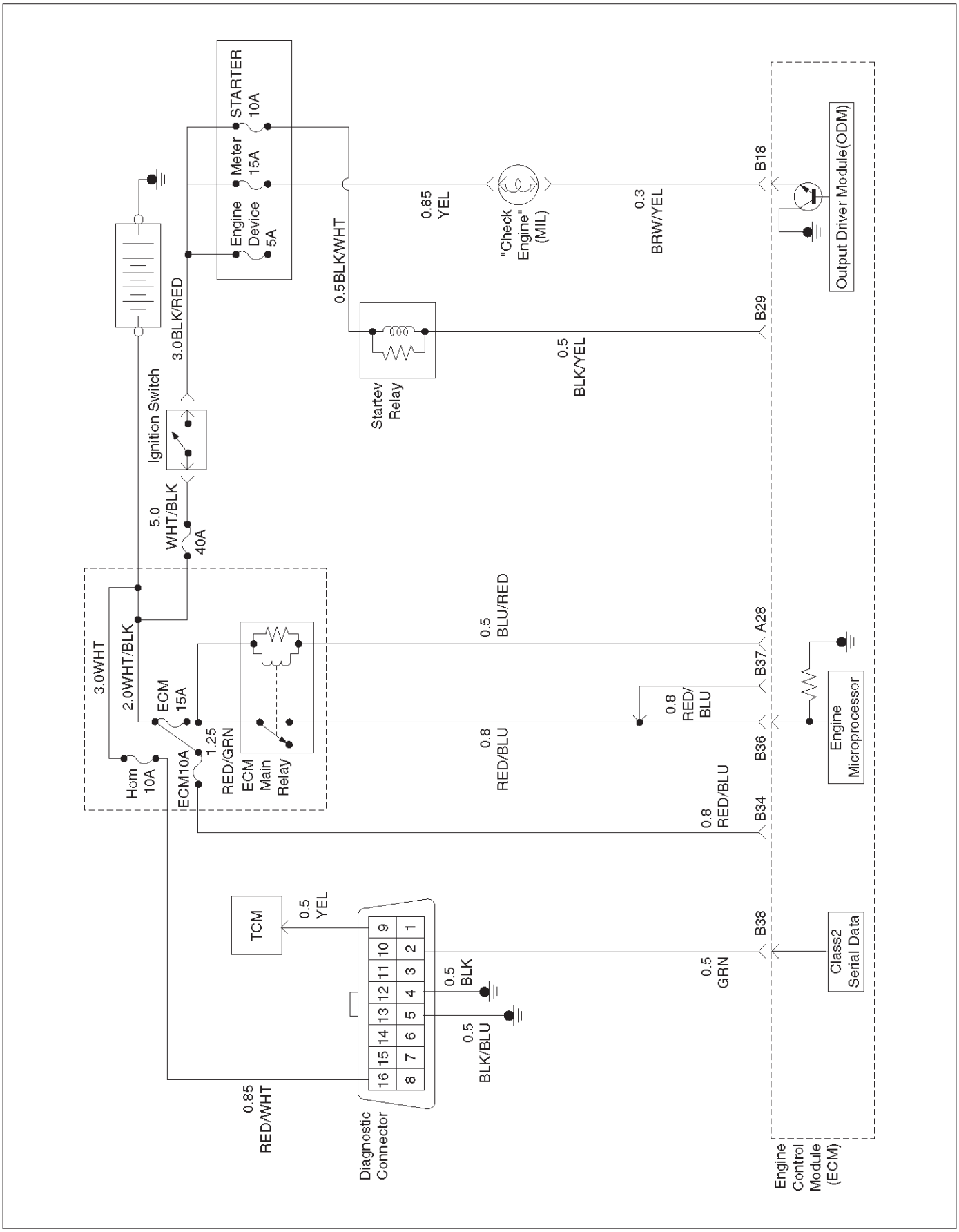

060RW038

ECM Wiring Diagram (2 of 6)

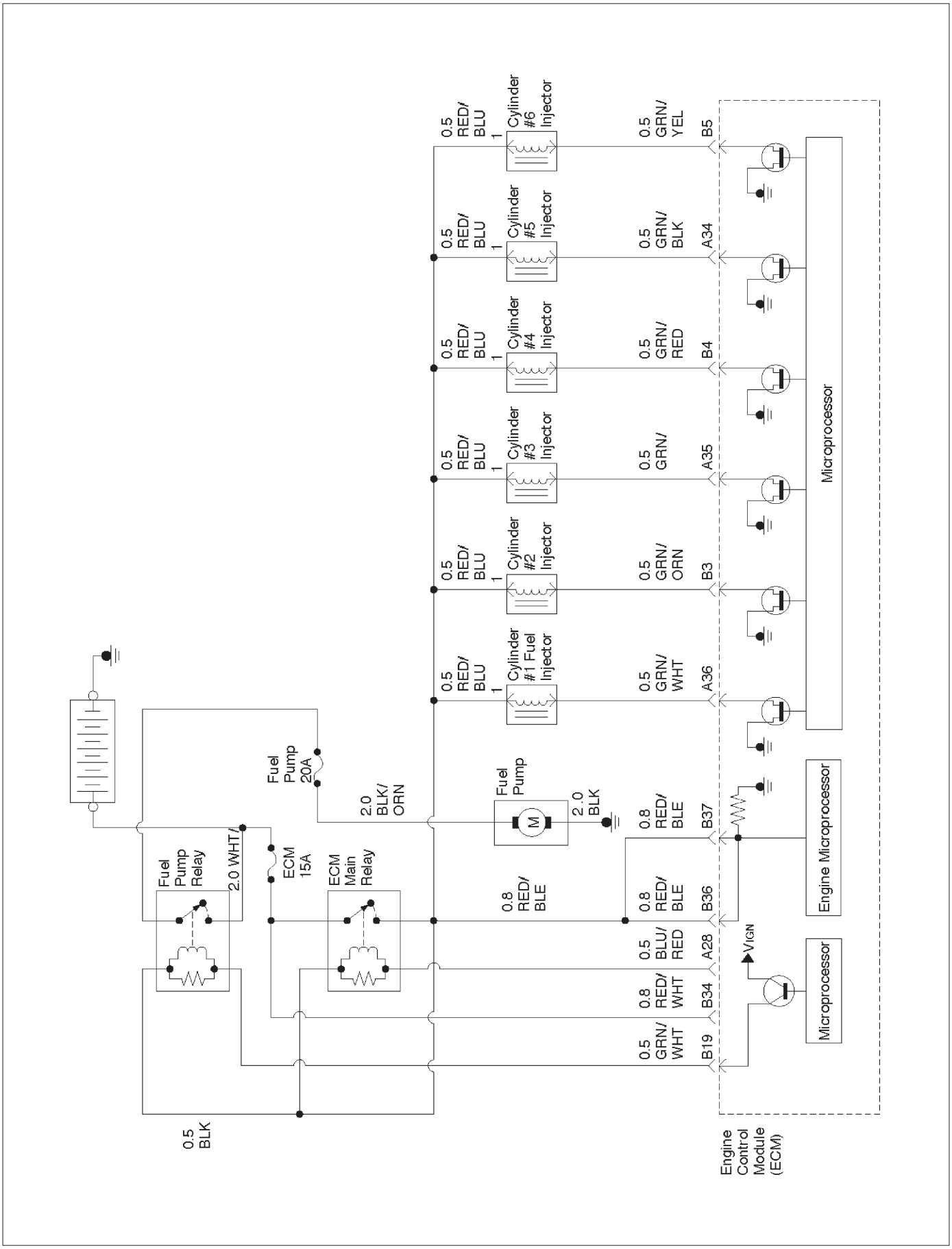

060RW039

ECM Wiring Diagram (3 of 6)

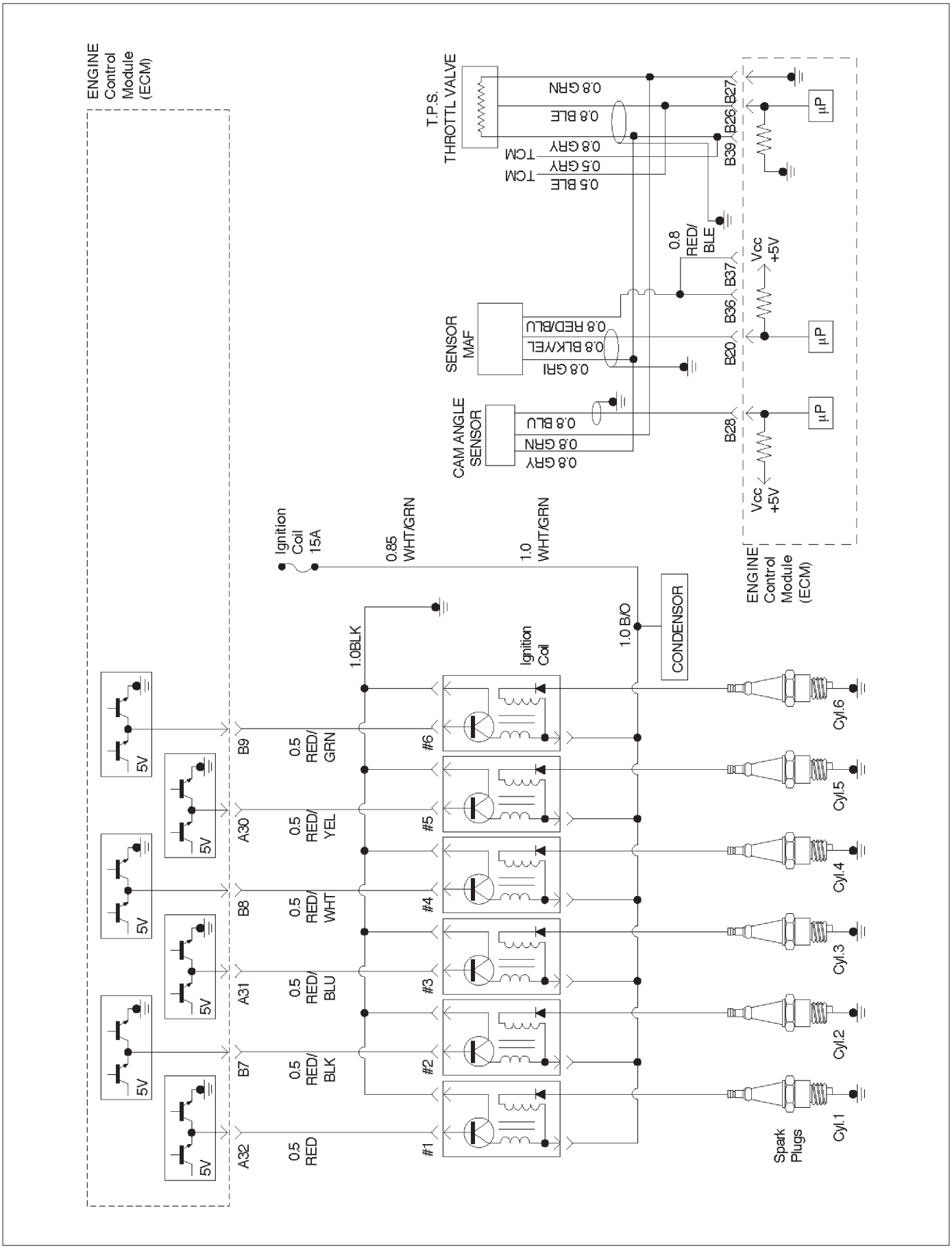

060RW036

ECM Wiring Diagram (4 of 6)

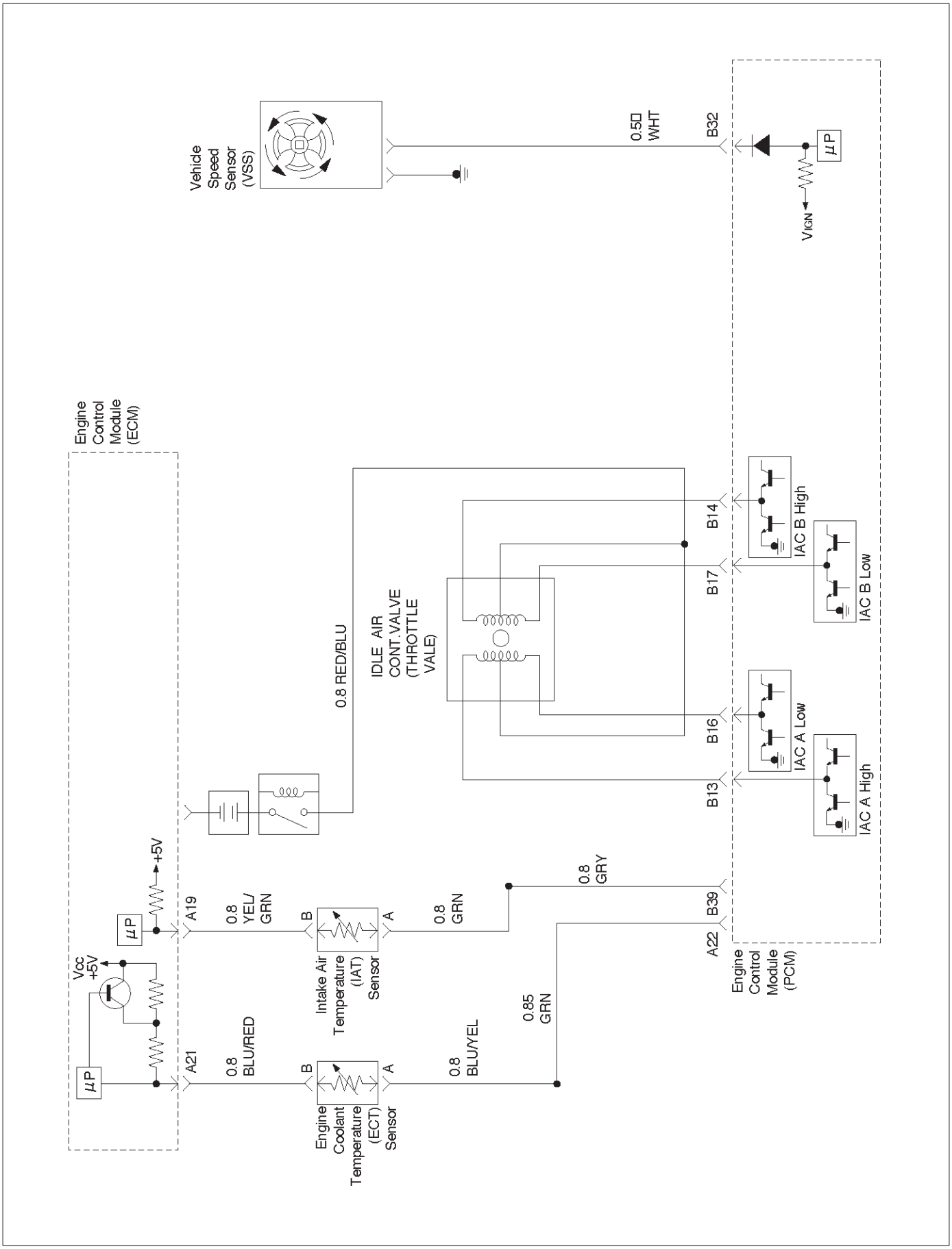

060RW037

ECM Wiring Diagram (5 of 6)

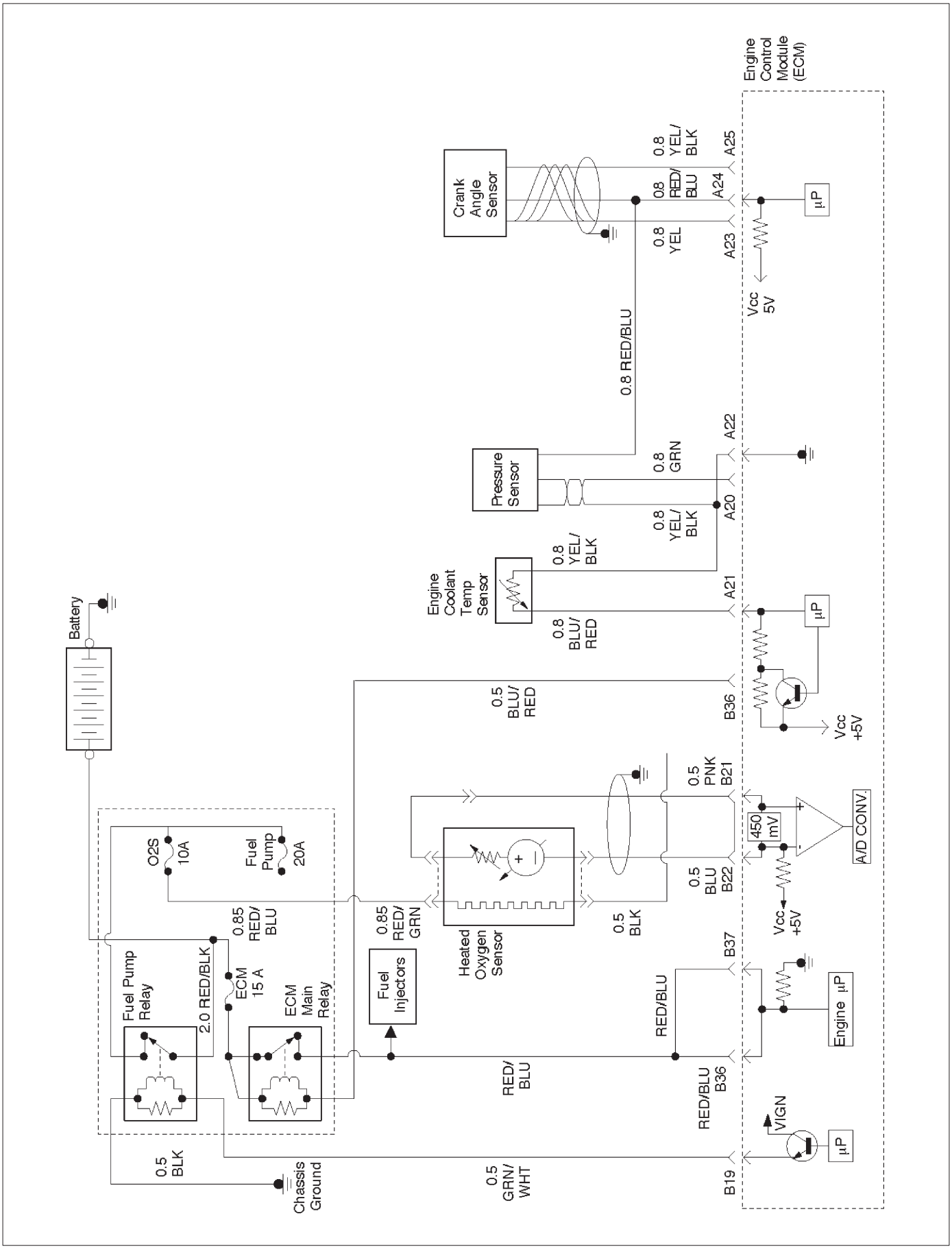

060RW040

ECM Wiring Diagram (6 of 6)

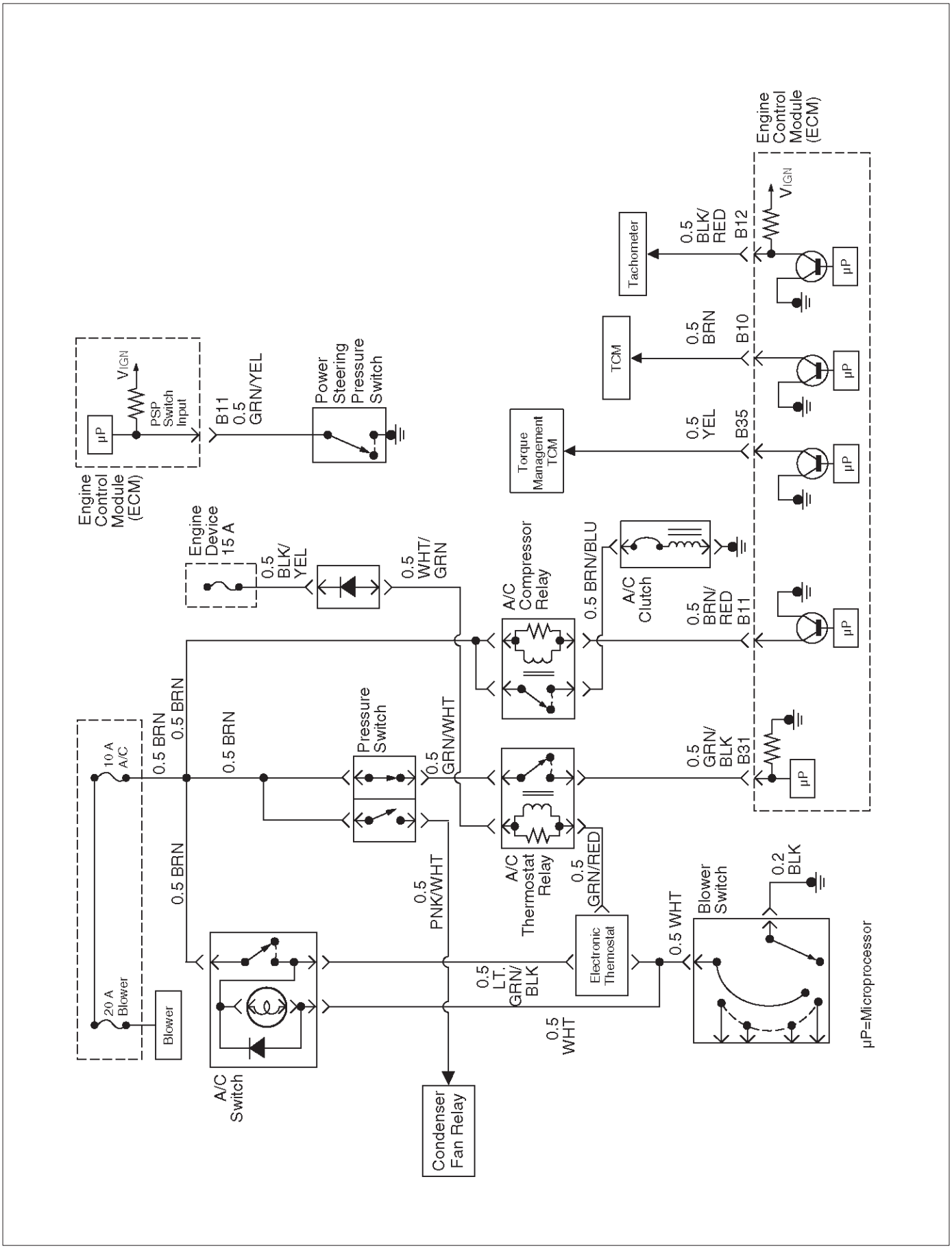

060RW041

ECM Pinouts

ECM Pinout Table, 40-Way Connector – “A”

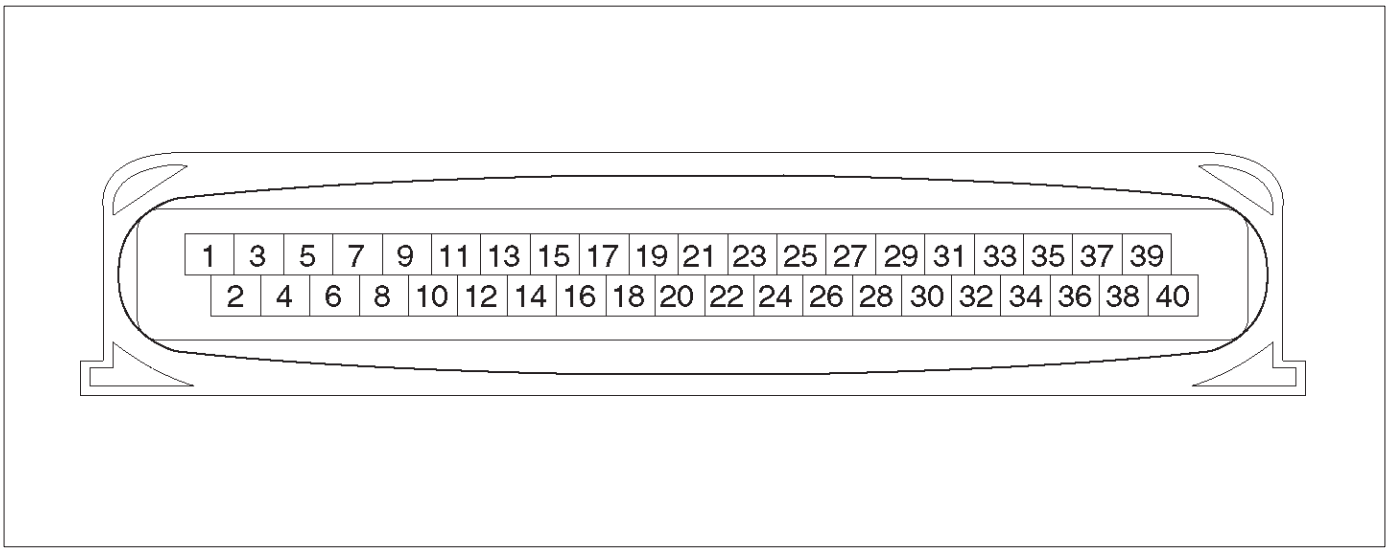

060RW043

PIN	PIN Function	PIN	PIN Function
A1	—	A21	Engine coolant temp sensor
A2	—	A22	Ground
A3	—	A23	Crank Angle Sensor
A4	Ground (Case)	A24	Power Supply
A5	—	A25	Ground (CA)
A6	—	A26	—
A7	Ground (Ecu)	A27	—
A8	Ground (Ecu)	A28	Self Shut Off
A9	—	A29	—
A10	—	A30	Ignition Coil 5
A11	—	A31	Ignition Coil 3
A12	—	A32	Ignition Coil 1
A13	—	A33	Ground (Power)
A14	—	A34	Fuel Infector 5
A15	—	A35	Fuel Infector 3
A16	—	A36	Fuel Infector 1
A17	—	A37	Ground (Case)
A18	—	A38	—
A19	Intake Air Temp Sensor	A39	—
A20	Barometric Pressure Sensor	A40	—

ECM Pinout Table, 40-Way Connector – “B”

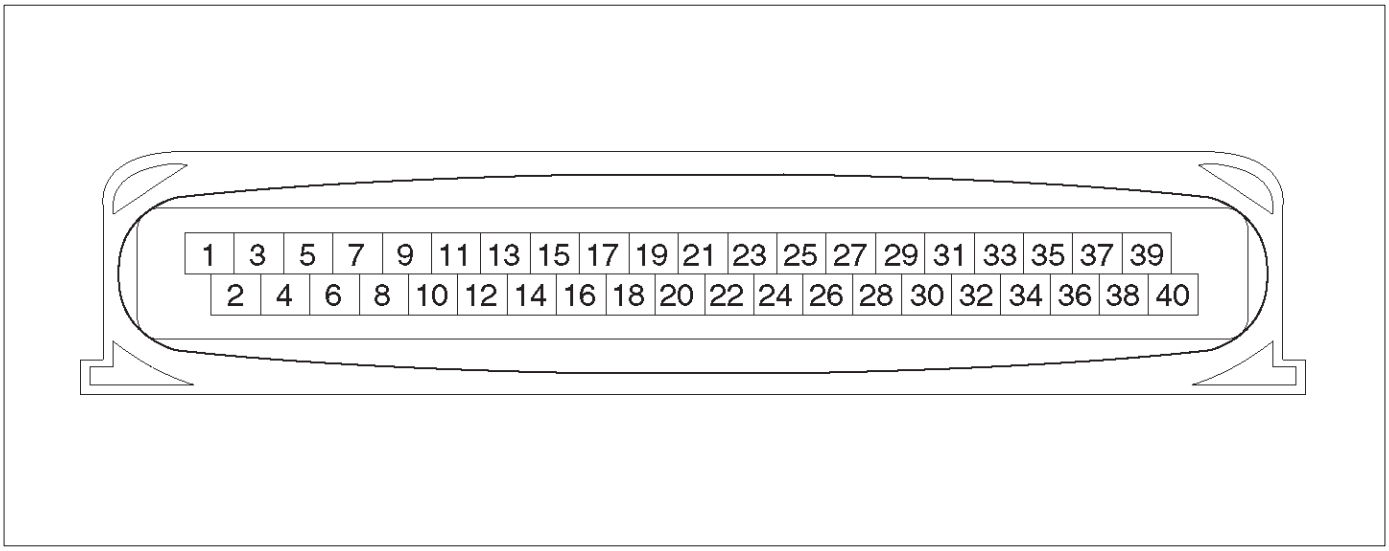

060RW043

PIN	PIN Function	PIN	PIN Function
B1	—	B21	Oxygen Sensor (O2 Sensor)
B2	—	B22	Ground (For IGM, LAO only)
B3	Fuel Infector 2	B23	—
B4	Fuel Infector 4	B24	—
B5	Fuel Infector 6	B25	Diag
B6	Ground (Power)	B26	Throttle Position Sensor (TPS)
B7	Ignition Coil 2	B27	CAM/TPS/Power Supply
B8	Ignition Coil 4	B28	Cam Angle Sensor
B9	Ignition Coil 6	B29	INH
B10	TW70	B30	P/St Pressure Switch
B11	A/C Clutch Relay	B31	A/C Request
B12	Tachcmeter Signal	B32	Vehicle Speed Sensor
B13	Idle Air Control Motor 1	B33	Ignition Swich
B14	Idle Air Control Motor 2	B34	Back Up Power Supply
B15	Canister Purge Solenoid (For IGM, LAO only)	B35	Torque Management
B16	Idle Air Control Motor 3	B36	Power Supply
B17	Idle Air Control Motor 4	B37	Power Supply
B18	MIL Lamp	B38	J1850
B19	Fuel Pump Relay	B39	Ground (CAM/TPS/MAF)
B20	MAF (Air Flow Sensor)	B40	—

Component Locators

Engine Component Locator

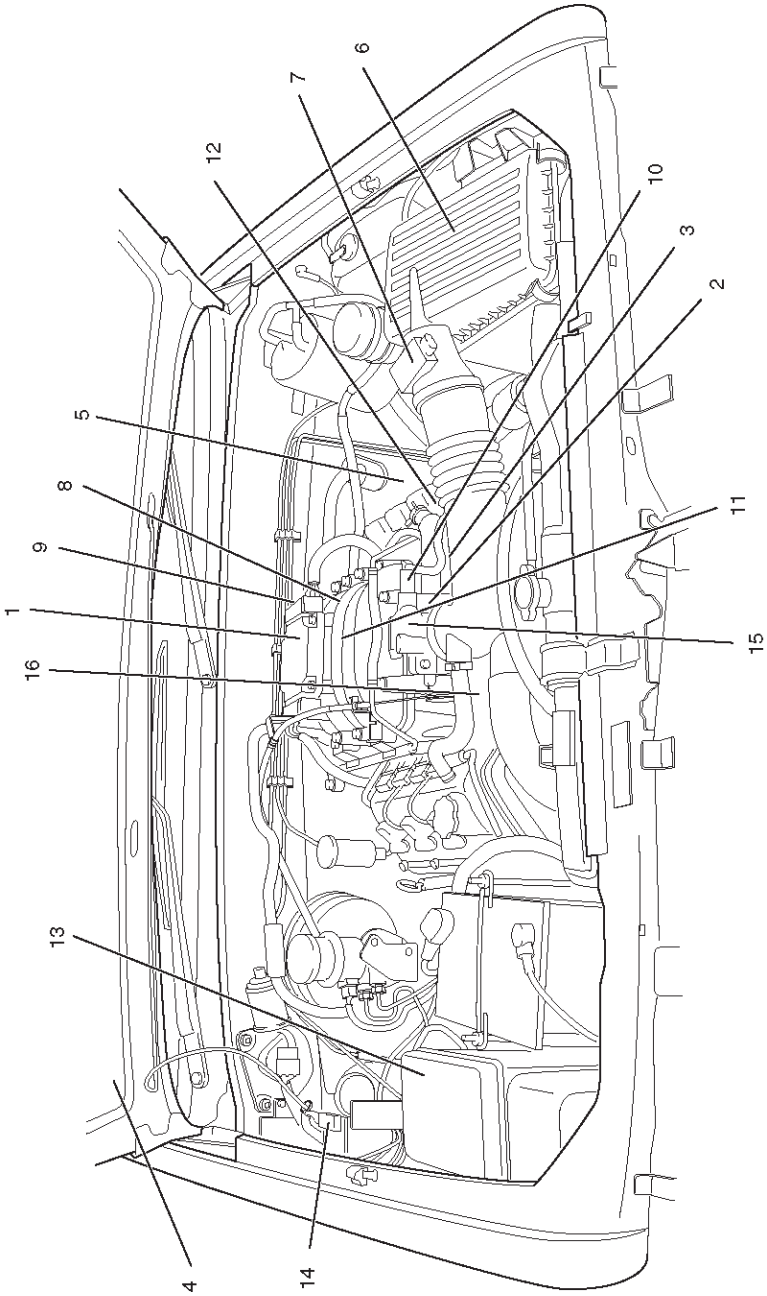

060RW061

Engine Component Locator Table

Number	Name	Location
1	Engine Control Modul	On the Common Chamber
2	Throttle Position (TP) Sensor	On the right of the throttle body
3	Intake Air Temperature (IAT) Sensor	On the intake air duct near the throttle body
4	Check Engine (MIL) Light	On the instrument panel beneath the tachometer
5	Positive Crankcase Ventilator (PCV) Valve	On the left of the cylinder head cover
6	Air Cleaner	Left front of the engine bay
7	Mass Air Flow (MAF) Sensor	Attached to the air filter box
8	Camshaft Position (CMP) Sensor	On the rear right side at the left of the cylinder head cover
9	Fuel Pressure Regulator	Rear right side of the engine
10	Idle Air Control (IAC) Valve	On the left of the throttle body
11	Common Chamber	Top of the engine
12	EVAP Canister Purge Valve	Bolted to the front of the coolant pipe
13	Fuse/Relay Box	Along the inside of the right fender
14	Barometric Pressure (BARO) Sensor	Along the inside of the right fender
15	Throttle Body	Between the intake air duct and the upper intake manifold
16	Engine Coolant Temperature Sensor	On the coolant crossover pipe at the front of the engine, near the throttle body

Undercarriage Component Locator

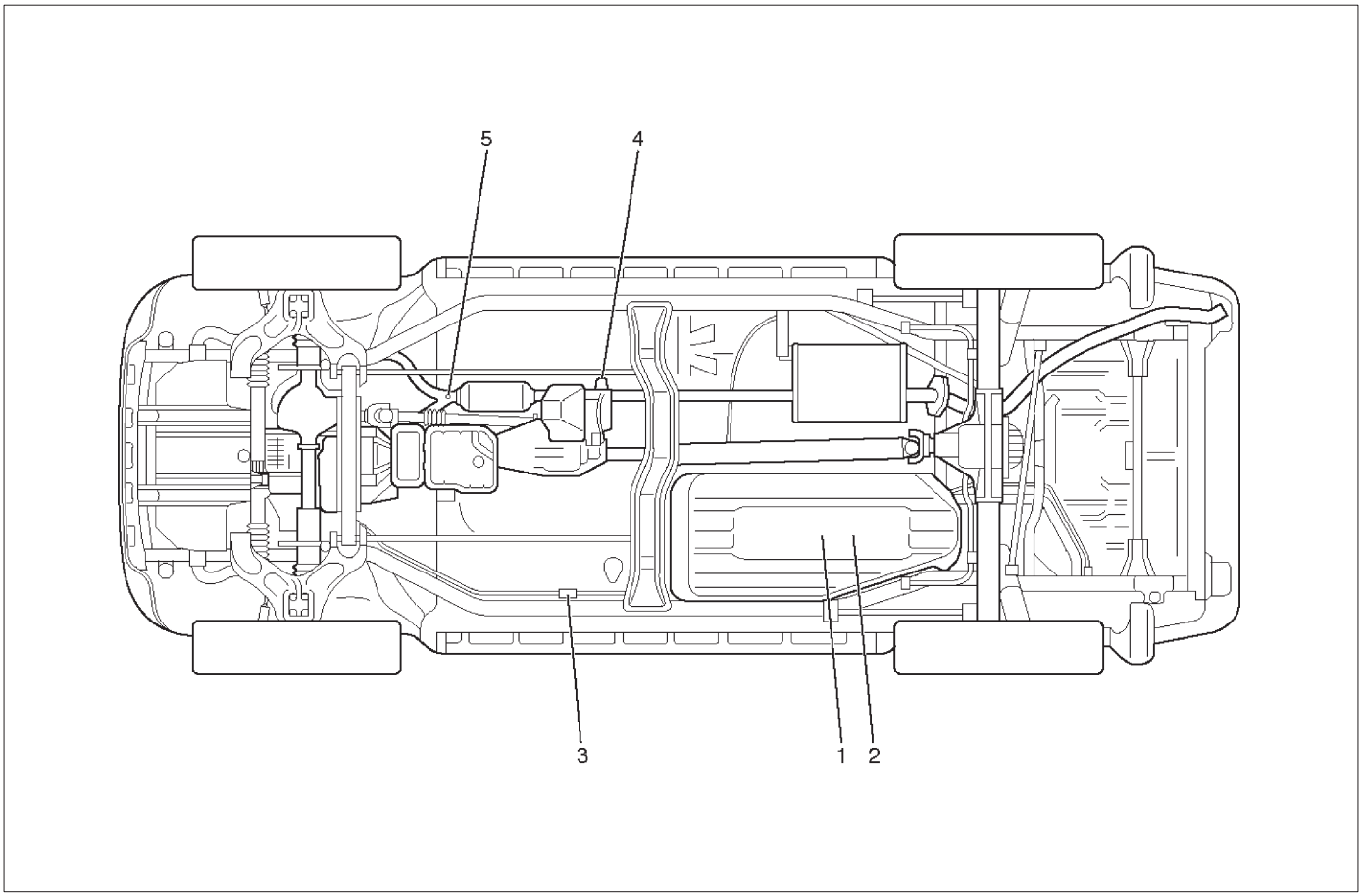

060RW060

Undercarriage Component Locator Table

Number	Name	Location
1	Fuel Pump Assembly	Installed in the top of the fuel tank
2	Fuel Gauge Unit	Installed in the top of the fuel tank
3	Fuel Filter	Located along the inside of the right frame rail, ahead of the fuel tank
4	Vehicle Speed Sensor (VSS)	Protrudes from the transmission housing, just ahead of the propeller shaft
5	Heated Oxygen Sensor	Threaded into the exhaust pipe behind the converter

Sensors and Miscellaneous Component Locators

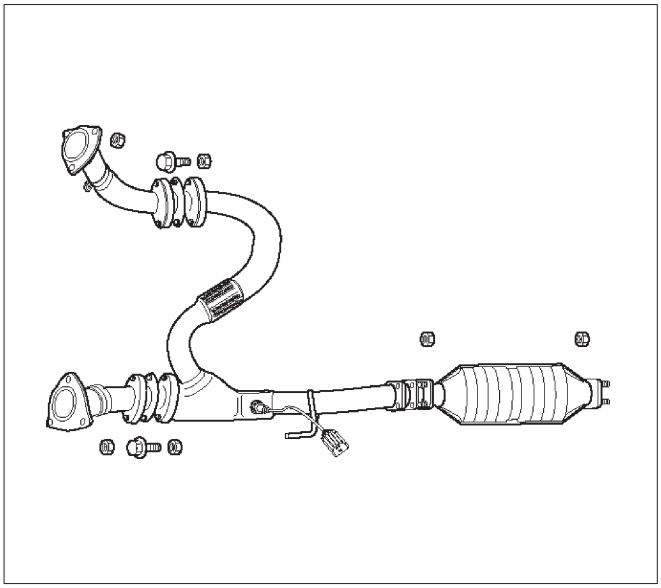

060RW107

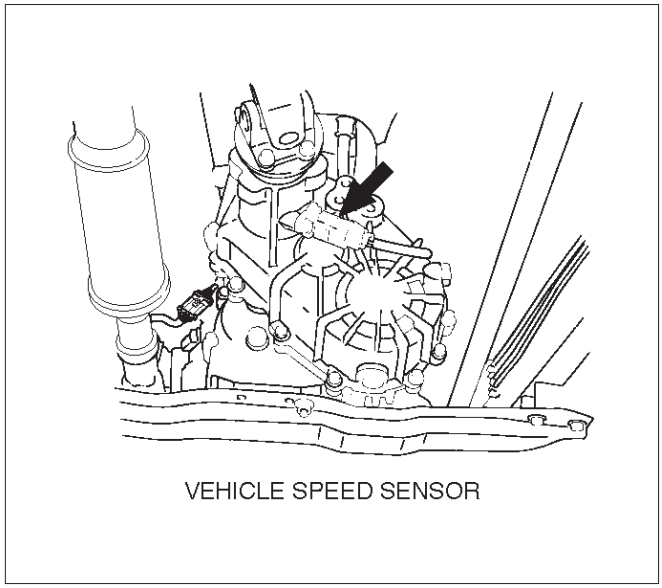

T321067

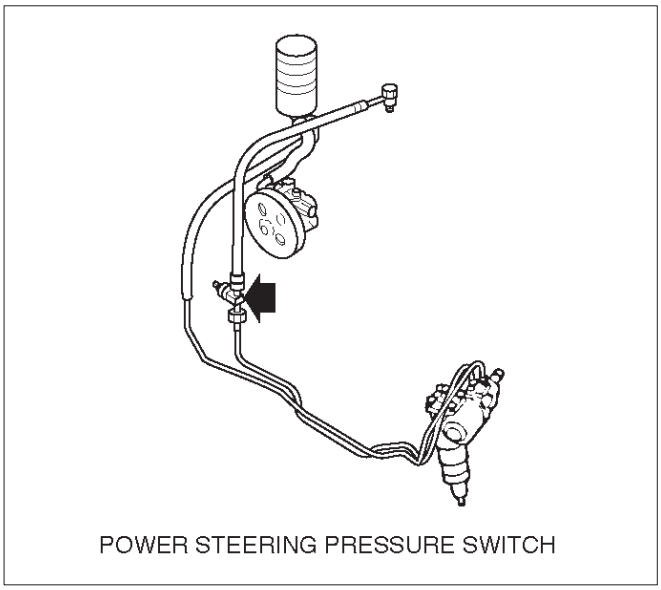

T321066

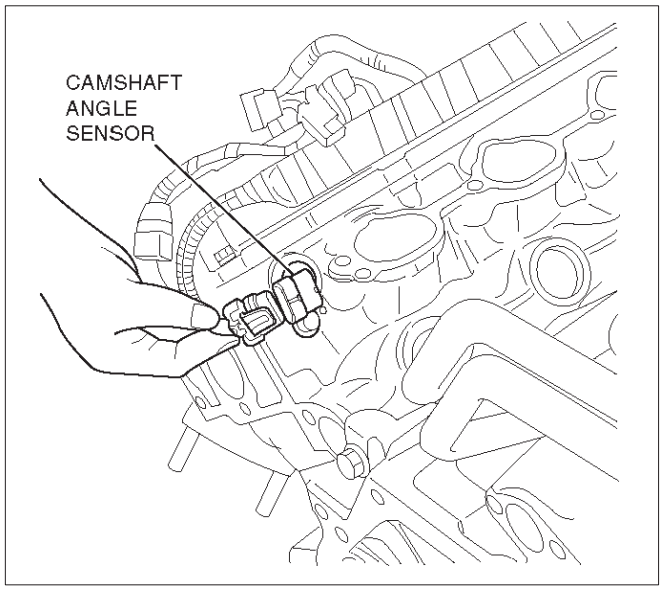

014RW125

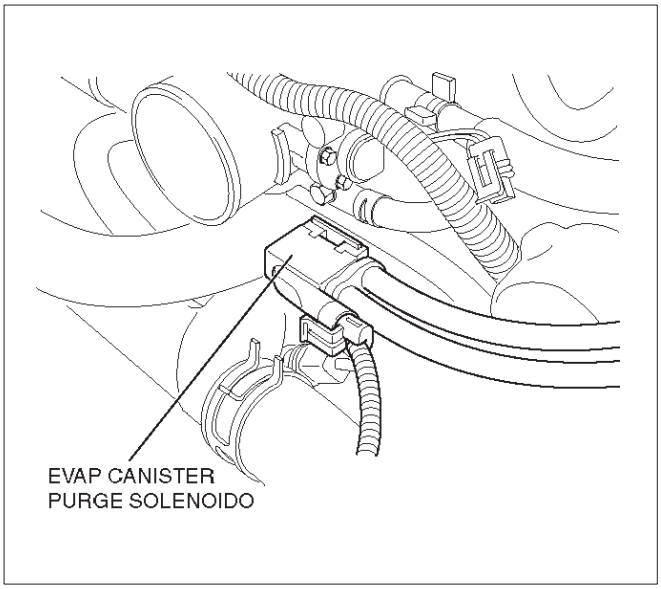

014RW141

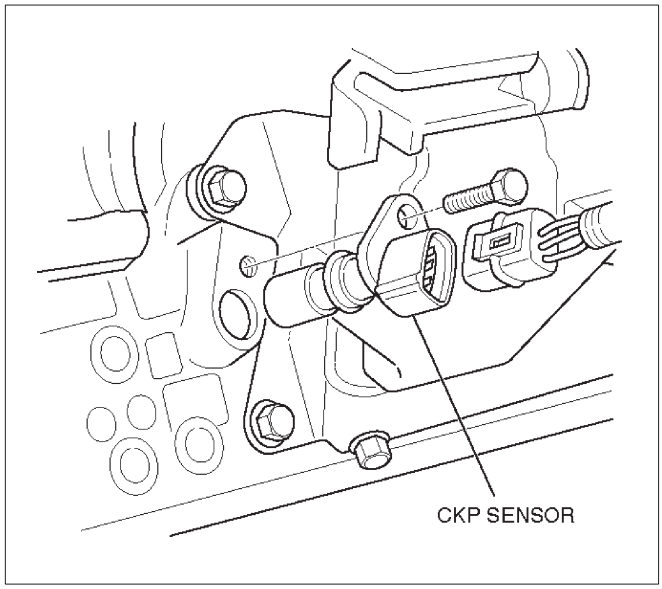

060RW111

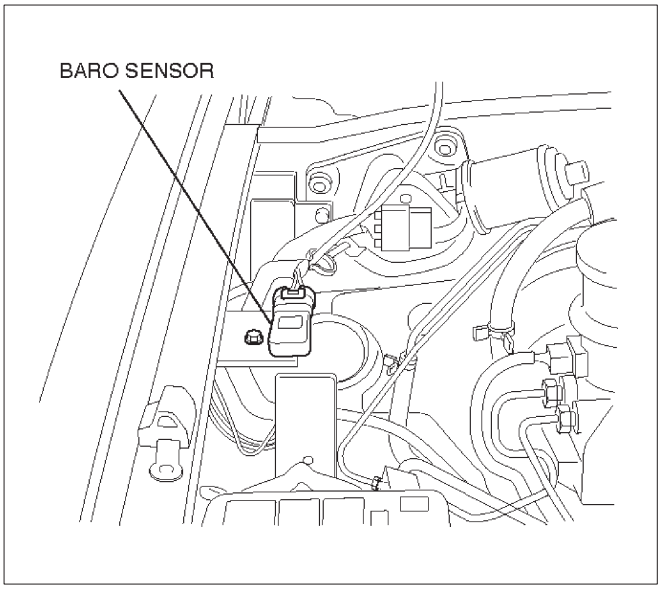

060RW024

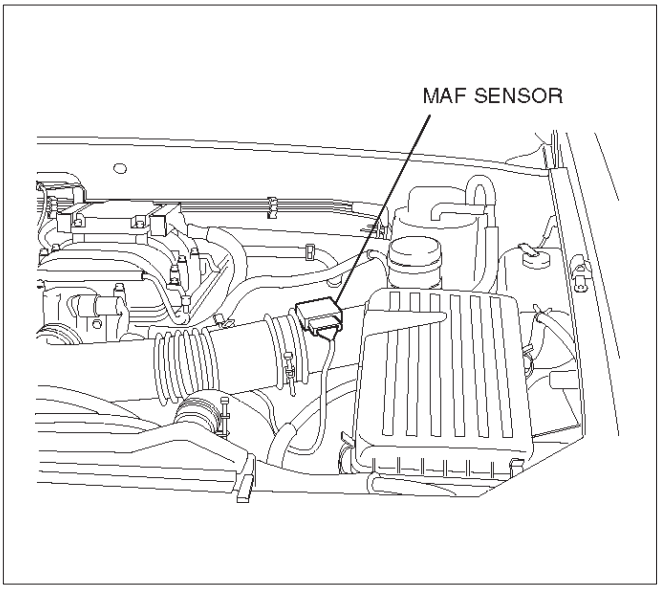

060RW023

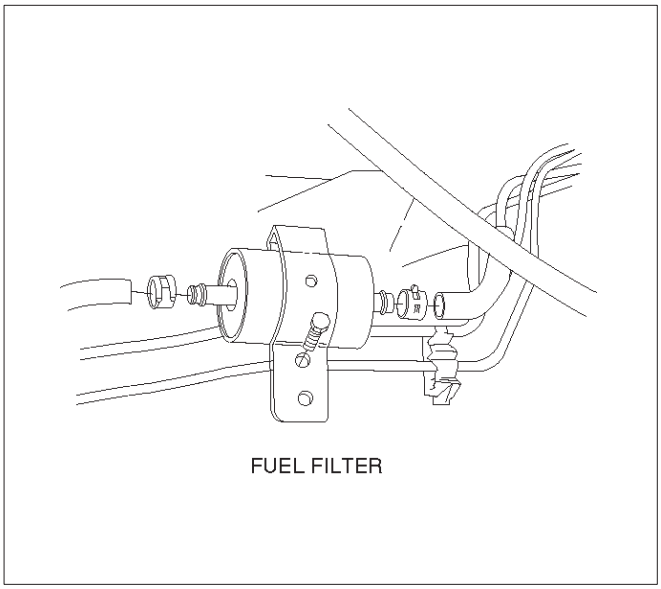

041RW013

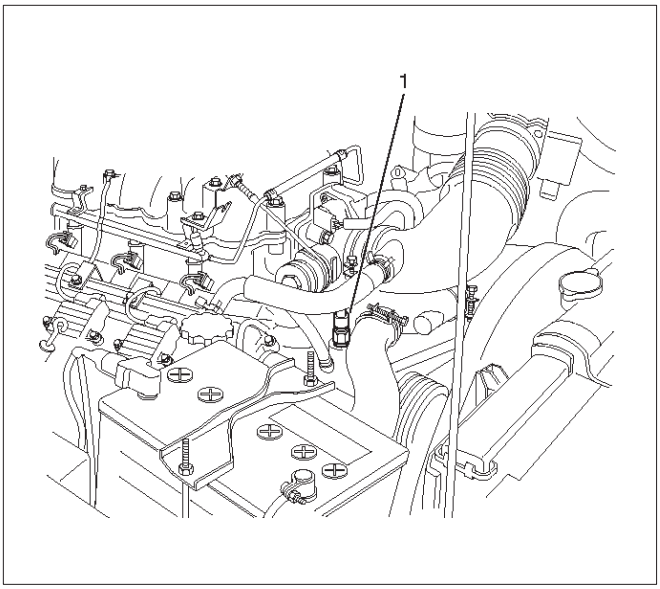

060RW050

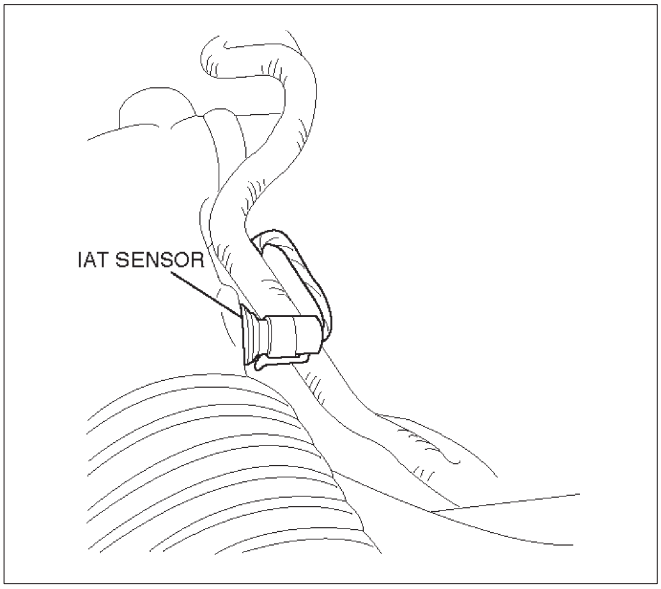

060RW109

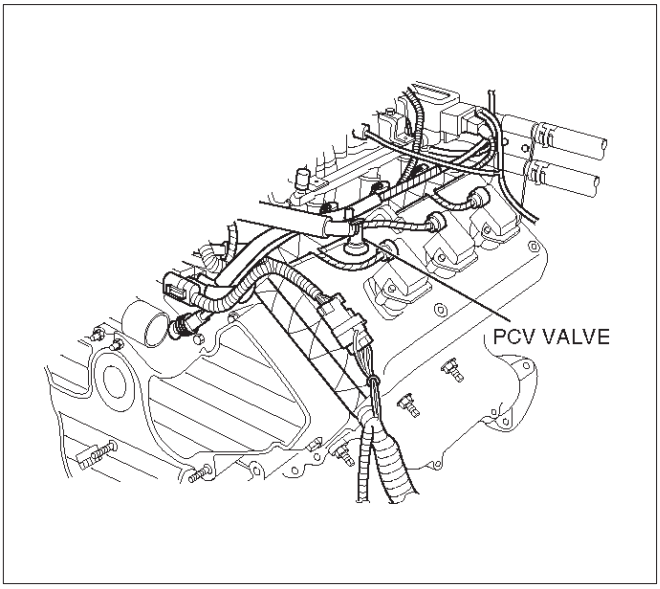

060RW029

Fuse and Relay Panel (Underhood Electrical Center)

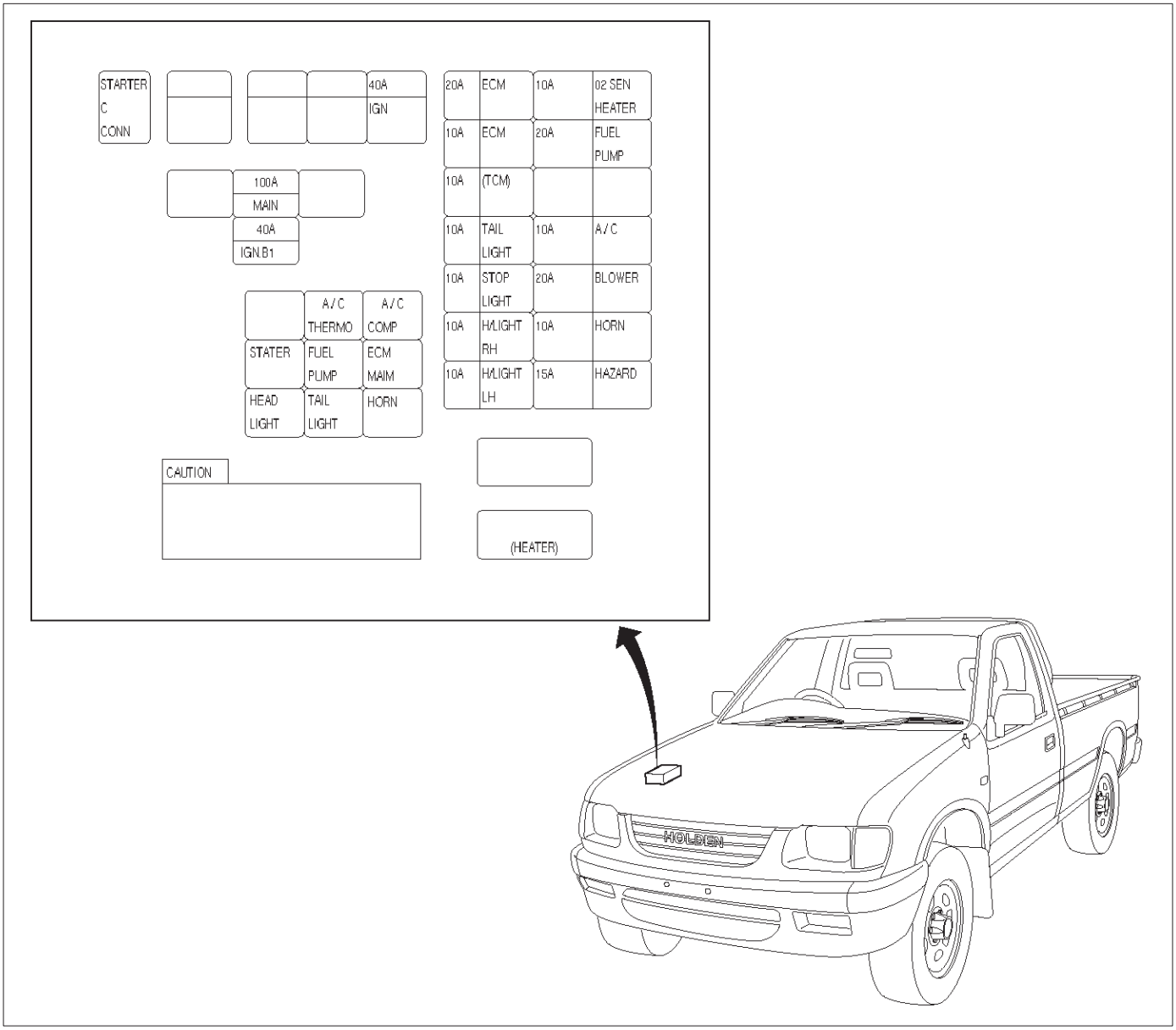

060RW027

Diagnosis

Strategy-Based Diagnostics

Strategy-Based Diagnostics

The strategy-based diagnostic is a uniform approach to repair all Electrical/Electronic (E/E) systems. The diagnostic flow can always be used to resolve an E/E system problem and is a starting point when repairs are necessary. The following steps will instruct the technician how to proceed with a diagnosis:

1. Verify the customer complaint.
   - To verify the customer complaint, the technician should know the normal operation of the system.
2. Perform preliminary checks.
   - Conduct a thorough visual inspection.
   - Review the service history.
   - Detect unusual sounds or odors.
   - Gather diagnostic trouble code information to achieve an effective repair.
3. Check bulletins and other service information.
   - This includes videos, newsletters, etc.
4. Refer to service information (manual) system check(s).
   - “System checks” contain information on a system that may not be supported by one or more DTCs. System checks verify proper operation of the system. This will lead the technician in an organized approach to diagnostics.
5. Refer to service diagnostics.

DTC Stored

Follow the designated DTC chart exactly to make an effective repair.

No DTC

Select the symptom from the symptom tables. Follow the diagnostic paths or suggestions to complete the repair. You may refer to the applicable component/system check in the system checks.

No Matching Symptom

1. Analyze the complaint.
2. Develop a plan for diagnostics.
3. Utilize the wiring diagrams and the theory of operation.

Call technical assistance for similar cases where repair history may be available. Combine technician knowledge with efficient use of the available service information.

Intermittents

Conditions that are not always present are called intermittents. To resolve intermittents, perform the following steps:

1. Observe history DTCs, DTC modes, and freezeframe data.
2. Evaluate the symptoms and the conditions described by the customer.
3. Use a check sheet or other method to identify the circuit or electrical system component.
4. Follow the suggestions for intermittent diagnosis found in the service documentation.

Most scan tools, such as the Tech 2 and the J 39200:DVM, have data-capturing capabilities that can assist in detecting intermittents.

No Trouble Found

This condition exists when the vehicle is found to operate normally. The condition described by the customer may be normal. Verify the customer complaint against another vehicle that is operating normally. The condition may be intermittent. Verify the complaint under the conditions described by the customer before releasing the vehicle.

1. Re-examine the complaint.

   When the complaint cannot be successfully found or isolated, a re-evaluation is necessary. The complaint should be re-verified and could be intermittent as defined in *Intermittents*, or could be normal.
2. Repair and verify.

   After isolating the cause, the repairs should be made. Validate for proper operation and verify that the symptom has been corrected. This may involve road testing or other methods to verify that the complaint has been resolved under the following conditions:
   - Conditions noted by the customer.
   - If a DTC was diagnosed, verify a repair by duplicating conditions present when the DTC was set as noted in the Failure Records or Freeze Frame data.

Verifying Vehicle Repair

Verification of the vehicle repair will be more comprehensive for vehicles with OBD system diagnostics. Following a repair, the technician should perform the following steps:

IMPORTANT: Follow the steps below when you verify repairs on OBD systems. Failure to follow these steps could result in unnecessary repairs.

1. Review and record the Failure Records and the Freeze Frame data for the DTC which has been diagnosed (Freeze Frame data will only be stored for an A or B type diagnostic and only if the MIL (“Check Engine” lamp) has been requested).
2. Clear the DTC(s).
3. Operate the vehicle within conditions noted in the Failure Records and Freeze Frame data.
4. Monitor the DTC status information for the specific DTC which has been diagnosed until the diagnostic test associated with that DTC runs.

General Service Information

Fuel Quality

Fuel quality is not a new issue for the automotive industry, but its potential for turning on the MIL (“Check Engine” lamp) with OBD systems is new.

Fuel additives such as “dry gas” and “octane enhancers” may affect the performance of the fuel. The Reed Vapor Pressure of the fuel can also create problems in the fuel system, especially during the spring and fall months when severe ambient temperature swings occur. A high Reed Vapor Pressure could show up as a Fuel Trim DTC due to excessive canister loading. High vapor pressures generated in the fuel tank can also affect the Evaporative Emission diagnostic as well.

Using fuel with the wrong octane rating for your vehicle may cause driveability problems. Many of the major fuel companies advertise that using “premium” gasoline will improve the performance of your vehicle. Most premium fuels use alcohol to increase the octane rating of the fuel. Although alcohol-enhanced fuels may raise the octane rating, the fuel’s ability to turn into vapor in cold temperatures deteriorates. This may affect the starting ability and cold driveability of the engine.

Low fuel levels can lead to fuel starvation, lean engine operation, and eventually engine misfire.

Non-OEM Parts

All of the OBD diagnostics have been calibrated to run with OEM parts.

Aftermarket electronics, such as cellular phones, stereos, and anti-theft devices, may radiate EMI into the control system if they are improperly installed. This may cause a false sensor reading and turn on the MIL (“Check Engine” lamp).

Environment

Temporary environmental conditions, such as localized flooding, will have an effect on the vehicle ignition system. If the ignition system is rain-soaked, it can temporarily cause engine misfire and turn on the MIL (“Check Engine” lamp).

Vehicle Marshaling

The transportation of new vehicles from the assembly plant to the dealership can involve as many as 60 key cycles within 5Km miles of driving. This type of operation contributes to the fuel fouling of the spark plugs and will turn on the MIL (“Check Engine” lamp).

Poor Vehicle Maintenance

The sensitivity of OBD diagnostics will cause the MIL (“Check Engine” lamp) to turn on if the vehicle is not maintained properly. Restricted air filters, fuel filters, and crankcase deposits due to lack of oil changes or improper oil viscosity can trigger actual vehicle faults that were not previously monitored prior to OBD. Poor vehicle maintenance can not be classified as a “non-vehicle fault”, but with the sensitivity of OBD diagnostics, vehicle maintenance schedules must be more closely followed.

Severe Vibration

The Misfire diagnostic measures small changes in the rotational speed of the crankshaft. Severe driveline vibrations in the vehicle, such as caused by an excessive amount of mud on the wheels, can have the same effect on crankshaft speed as misfire.

Related System Faults

Many of the OBD system diagnostics will not run if the ECM detects a fault on a related system or component. One example would be that if the ECM detected a Misfire fault, the diagnostics on the catalytic converter would be suspended until Misfire fault was repaired. If the Misfire fault was severe enough, the catalytic converter could be damaged due to overheating and would never set a Catalyst DTC until the Misfire fault was repaired and the Catalyst diagnostic was allowed to run to completion. If this happens, the customer may have to make two trips to the dealership in order to repair the vehicle.

Maitenance Schedule

Refer to the *Maintenance Schedule*.

Visual/Physical Engine Compartment Inspection

Perform a careful visual and physical engine compartment inspection when performing any diagnostic procedure or diagnosing the cause of an emission test failure. This can often lead to repairing a problem without further steps. Use the following guidelines when performing a visual/physical inspection:

- Inspect all vacuum hoses for punches, cuts, disconnects, and correct routing.
- Inspect hoses that are difficult to see behind other components.
- Inspect all wires in the engine compartment for proper connections, burned or chafed spots, pinched wires, contact with sharp edges or contact with hot exhaust manifolds or pipes.

Basic Knowledge of Tools Required

NOTE: Lack of basic knowledge of this powertrain when performing diagnostic procedures could result in an incorrect diagnosis or damage to powertrain components. Do not attempt to diagnose a powertrain problem without this basic knowledge.

A basic understanding of hand tools is necessary to effectively use this section of the Service Manual.

Seral Data Communications

Class II Serial Data Communications

This vehicle utilizes the “Class II” communication system. Each bit of information can have one of two lengths: long or short. This allows vehicle wiring to be reduced by transmitting and receiving multiple signals over a single wire. The messages carried on Class II data streams are also prioritized. If two messages attempt to establish communications on the data line at the same time, only the message with higher priority will continue. The device with the lower priority message must wait. The most significant result of this regulation is that it provides Tech 2 manufacturers with the capability to access data from any make or model vehicle that is sold.

The data displayed on the other Tech 2 will appear the same, with some exceptions. Some scan tools will only be able to display certain vehicle parameters as values that are a coded representation of the true or actual value. For more information on this system of coding, refer to *Decimal/Binary/Hexadecimal Conversions.* On this vehicle the Tech 2 displays the actual values for vehicle parameters. It will not be necessary to perform any conversions from coded values to actual values.

On-Board Diagnostic (OBD)

On-Board Diagnostic Tests

A diagnostic test is a series of steps, the result of which is a pass or fail reported to the diagnostic executive. When a diagnostic test reports a pass result, the diagnostic executive records the following data:

- The diagnostic test has been completed since the last ignition cycle.
- The diagnostic test has passed during the current ignition cycle.
- The fault identified by the diagnostic test is not currently active.

When a diagnostic test reports a fail result, the diagnostic executive records the following data:

- The diagnostic test has been completed since the last ignition cycle.
- The fault identified by the diagnostic test is currently active.
- The fault has been active during this ignition cycle.
- The operating conditions at the time of the failure.

Remember, a fuel trim DTC may be triggered by a list of vehicle faults. Make use of all information available (other DTCs stored, rich or lean condition, etc.) when diagnosing a fuel trim fault.

Comprehensive Component Monitor Diagnostic Operation

Input Components:

Input components are monitored for circuit continuity and out-of-range values. This includes rationality checking. Rationality checking refers to indicating a fault when the signal from a sensor does not seem reasonable, i.e.Throttle Position (TP) sensor that indicates high throttle position at low engine loads or BARO voltage. Input components may include, but are not limited to the following sensors:

- Vehicle Speed Sensor (VSS)
- Inlet Air Temperature (IAT) Sensor
- Crankshaft Position (CKP) Sensor
- Throttle Position (TP) Sensor
- Engine Coolant Temperature (ECT) Sensor
- Camshaft Position (CMP) Sensor
- Barometric Pressure (BARO) Sensor
- Mass Air Flow (MAF) Sensor

In addition to the circuit continuity and rationality check the ECT sensor is monitored for its ability to achieve a steady state temperature to enable closed loop fuel control.

Output Components:

Output components are diagnosed for proper response to control module commands. Components where functional monitoring is not feasible will be monitored for circuit continuity and out-of-range values if applicable.

Output components to be monitored include, but are not limited to, the following circuit:

- Idle Air Control (IAC) Motor
- Control module controlled EVAP Canister Purge Valve
- Electronic Transmission controls
- A/C relays
- Cooling fan relay
- VSS output
- MIL control

Refer to ECM and Sensors in General Descriptions.

Passive and Active Diagnostic Tests

A passive test is a diagnostic test which simply monitors a vehicle system or component. Conversely, an active test, actually takes some sort of action when performing diagnostic functions, often in response to a failed passive test.

Intrusive Diagnostic Tests

This is any on-board test run by the Diagnostic Management System which may have an effect on vehicle performance or emission levels.

Warm-Up Cycle

A warm-up cycle means that engine at temperature must reach a minimum of 70˚C (160˚F) *and* rise at least 22˚C (40˚F) over the course of a trip.

Freeze Frame

Freeze Frame is an element of the Diagnostic Management System which stores various vehicle information at the moment an emissions-related fault is stored in memory and when the MIL is commanded on. These data can help to identify the cause of a fault. Refer to *Storing And Erasing Freeze Fame Data* for more detailed information.

Failure Records

Failure Records data is an enhancement of the OBD Freeze Frame feature.Failure Records store the same vehicle information as does Freeze Frame, but it will store that information for any fault which is stored in on-board memory, while Freeze Frame stores information only for emission-related faults that command the MIL on.

System Status and Drive Cycle for Satisfying Federal Inspection/Maintenance (I/M 240) Regulations

I/M Ready Status means a signal or flag for each emission system test that had been set in the ECM. I/M Ready Status indicates that the vehicle on-board emissions diagnostics have been run. I/M Ready Status is not concerned whether the emission system passed or failed the test, only that on-board diagnosis is complete. Not all vehicle use all possible I/M flags.

Common OBD Terms

Diagnostic

When used as a noun, the word diagnostic refers to any on-board test run by the vehicle's Diagnostic Management System. A diagnostic is simply a test run on a system or component to determine if the system or component is operating according to specification. There are many diagnostics, shown in the following list:

- Oxygen sensors

Enable Criteria

The term "enable criteria" is engineering language for the conditions necessary for a given diagnostic test to run. Each diagnostic has a specific list of conditions which must be met before the diagnostic will run. "Enable criteria" is another way of saying "conditions required".

The enable criteria for each diagnostic is listed on the first page of the DTC description under the heading "Conditions for Setting the DTC". Enable criteria varies with each diagnostic, and typically includes, but is not limited to the following items:

- engine speed
- vehicle speed
- ECT
- MAF/BARO
- barometric pressure
- IAT
- TP
- high canister purge
- fuel trim
- TCC enabled
- A/C on

Trip

Technically, a trip is a key on-run-key off cycle in which all the enable criteria for a given diagnostic are met, allowing the diagnostic to run. Unfortunately, this concept is not quite that simple. A trip is official when all the enable criteria for a given diagnostic are met. But because the enable criteria vary from one diagnostic to another, the definition of trip varies as well. Some diagnostic are run when the vehicle is at operating temperature, some when the vehicle first start up; some require that the vehicle be cruising at a steady highway speed, some run only when the vehicle is idle; some diagnostics function with the TCC disables. Some run only immediately following a cold engine start-up.

A trip then, is defined as a key on-run-key off cycle in which the vehicle was operated in such a way as to satisfy the enables criteria for a given diagnostic, and this diagnostic will consider this cycle to be one trip. However, another diagnostic with a different set of enable criteria (which were not met) during this driving event, would not consider it a trip. No trip will occur for that particular diagnostic until the vehicle is driven in such a way as to meet all the enable criteria.

The Diagnostic Executive

The Diagnostic Executive is a unique segment of software which is designed to coordinate and prioritize the diagnostic procedures as well as define the protocol for recording and displaying their results. The main responsibilities of the Diagnostic Executive are listed as follows:

- Commanding the MIL ("Check Engine" lamp) on and off
- DTC logging and clearing
- Freeze Frame data for the first emission related DTC recorded
- Operating conditions Failure Records buffer, (the number of records will vary)
- Current status information on each diagnostic

The Diagnostic Executive records DTCs and turns on the MIL when emission-related faults occur. It can also turn off the MIL if the conditions cease which caused the DTC to set.

Diagnostic Information

The diagnostic charts and functional checks are designed to locate a faulty circuit or component through a process of logical decisions. The charts are prepared with the requirement that the vehicle functioned correctly at the time of assembly and that there are not multiple faults present.

There is a continuous self-diagnosis on certain control functions. This diagnostic capability is complemented by the diagnostic procedures contained in this manual. The language of communicating the source of the malfunction is a system of diagnostic trouble codes. When a malfunction is detected by the control module, a diagnostic trouble code is set and the Malfunction Indicator Lamp (MIL) ("Check Engine" lamp) is illuminated.

Malfunction Indicator Lamp (MIL)

The Malfunction Indicator Lamp (MIL) looks the same as the MIL you are already familiar with ("Check Engine" lamp).

Basically, the MIL is turned on when the ECM detects a DTC that will impact the vehicle emissions.

The MIL is under the control of the Diagnostic Executive. The MIL will be turned on if an emissions-related diagnostic test indicates a malfunction has occurred. It will stay on until the system or component passes the same test, for three consecutive trips, with no emissionsrelated faults.

Extinguishing the MIL

When the MIL is on, the Diagnostic Executive will turn off the MIL after *three consecutive* trips that a "test passed" has been reported for the diagnostic test that originally caused the MIL to illuminate.

Although the MIL has been turned off, the DTC will remain in the ECM memory (both Freeze Frame and Failure Records) until *forty(40) warm-up cycles after no faults* have been completed.

If the MIL was set by either a fuel trim or misfire-related DTC, additional requirements must be met. In addition to the requirements stated in the previous paragraph, these requirements are as follows:

- The diagnostic tests that are passed must occur with 375 RPM of the RPM data stored at the time the last test failed.
- Plus or minus ten (10) percent of the engine load that was stored at the time the last failed.
- Similar engine temperature conditions (warmed up or warming up) as those stored at the time the last test failed.

Meeting these requirements ensures that the fault which turned on the MIL has been corrected.

The MIL ("Check Engine" lamp) is on the instrument panel and has the following functions:

- It informs the driver that a fault that affects vehicle emission levels has occurred and that the vehicle should be taken for service as soon as possible.
- As a bulb and system check, the MIL will come "ON" with the key "ON" and the engine not running. When the engine is started, the MIL will turn "OFF."
- When the MIL remains "ON" while the engine is running, or when a malfunction is suspected due to a driveability or emissions problem, a Powertrain On-Board Diagnostic (OBD) System Check must be performed. The procedures for these checks are given in On-Board Diagnostic (OBD) System Check. These checks will expose faults which may not be detected if other diagnostics are performed first.

DTC Types

Each DTC is directly related to a diagnostic test. The Diagnostic Management System sets DTC based on the failure of the tests during a trip or trips. Certain tests must fail two (2) consecutive trips before the DTC is set. The following are the four (4) types of DTCs and the characteristics of those codes:

- Type A
  - Emissions related
  - Requests illumination of the MIL of the first trip with a fail
  - Stores a History DTC on the first trip with a fail
  - Stores a Freeze Frame (if empty)
  - Stores a Fail Record
  - Updates the Fail Record each time the diagnostic test fails
- Type B
  - Emissions related
  - "Armed" after one (1) trip with a fail
  - "Disarmed" after one (1) trip with a pass
  - Requests illumination of the MIL on the *second consecutive trip* with a fail
  - Stores a History DTC on the second consecutive trip with a fail (The DTC will be armed after the first fail)
  - Stores a Freeze Frame on the second consecutive trip with a fail (if empty)
  - Stores a Fail Record when the first test fails (not dependent on *consecutive trip* fails)
  - Updates the Fail Record each time the diagnostic test fails

(Some special conditions apply to misfire and fuel trim DTCs)

- Type C (if the vehicle is so equipped)
  - Non-Emissions related
  - Requests illumination of the Service Lamp or the service message on the Drive Information Center (DIC) on the *first trip* with a fail
  - Stores a History DTC on the*first trip* with a fail
  - *Does not* store a Freeze Frame
  - Stores Fail Record when test fails
  - Updates the Fail Record each time the diagnostic test fails
- Type D (*Type D* non-emissions related are not utilized on certain vehicle applications).
  - Non-Emissions related
  - Dose not request illumination of any lamp
  - Stores a History DTC on the *first trip* with a fail
  - *Does not* store a Freeze Frame

- Stores Fail Record when test fails
- Updates the Fail Record each time the diagnostic test fails

Only four Fail Records can be stored. Each Fail Record is for a different DTC. It is possible that there will not be Fail Records for every DTC if multiple DTCs are set.

Storing and Erasing Freeze Frame Data and Failure Records

The data captured is called Freeze Frame data. The Freeze Frame data is very similar to a single record of operating conditions. Whenever the MIL is illuminated, the corresponding record of operating conditions is recorded to the Freeze Frame buffer.

Freeze Frame data can only be overwritten with data associated with a misfire or fuel trim malfunction. Data from these faults take precedence over data associated with any other fault. The Freeze Frame data will not be erased unless the associated history DTC is cleared.

Each time a diagnostic test reports a failure, the current engine operating conditions are recorded in the *Failure Records* buffer. A subsequent failure will update the recorded operating conditions. The following operating conditions for the diagnostic test which failed *typically* include the following parameters:

- Air Fuel Ratio
- Air Flow Rate
- Fuel Trim
- Engine Speed
- Engine Load
- Engine Coolant Temperature
- Vehicle Speed
- TP Angle
- BARO
- Injector Base Pulse Width
- Loop Status

Intermittent Malfunction Indicator Lamp

In the case of an “intermittent” fault, the MIL (“Check Engine” lamp) may illuminate and then (after three trips) go “OFF”. However, the corresponding diagnostic trouble code will be stored in the memory. When unexpected diagnostic trouble codes appear, check for an intermittent malfunction.

A diagnostic trouble code may reset. Consult the “Diagnostic Aids” associated with the diagnostic trouble code. A physical inspection of the applicable sub–system most often will resolve the problem.

Data Link Connector (DLC)

The provision for communication with the contorl module is the Data Link Connector (DLC). It is located at the lower left of the instrument panel behind a small square cover. The DLC is used to connect to a Tech 2. Some common uses of the Tech 2 are listed below:

- Identifying stored Diagnostic Trouble Codes (DTCs).
- Clearing DTCs.
- Performing out put control tests.
- Reading serial data.

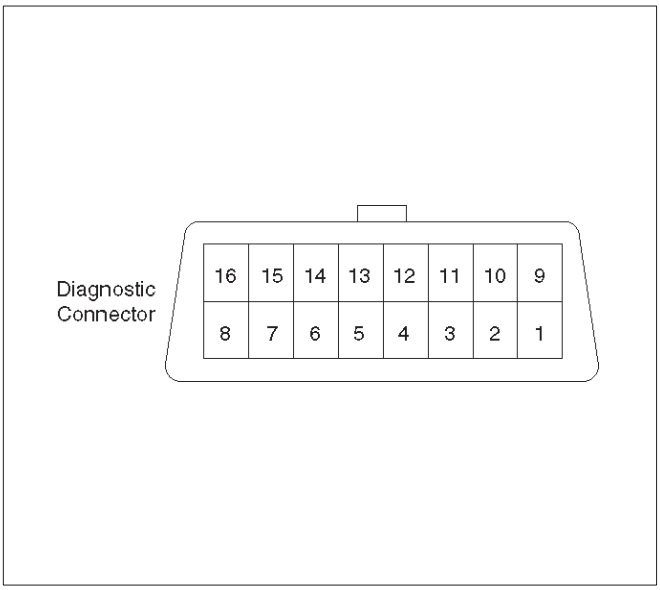

060RW046

Verifying Vehicle Repair

Verification of vehicle repair will be more comprehensive for vehicles with OBD system diagnostic. Following a repair, the technician should perform the following steps:

1. Review and record the Fail Records and/or Freeze Frame data for the DTC which has been diagnosed (Freeze Frame data will only be stored for an A or B type diagnostic and only if the MIL has been requested).
2. Clear DTC(s).
3. Operate the vehicle within conditions noted in the Fail Records and/or Freeze Frame data.
4. Monitor the DTC status information for the specific DTC which has been diagnosed until the diagnostic test associated with that DTC runs.

Following these steps are very important in verifying repairs on OBD systems. Failure to follow these steps could result in unnecessary repairs.

Reading Flash Diagnostic Trouble Codes

The provision for communicating with the Engine Control Module (ECM) is the Data Link Connector (DLC). The DLC is located behind the lower front instrument panel. It is used in the assembly plant to receive information in checking that the engine is operating properly before it leaves the plant.

The diagnostic trouble code(s) (DTCs) stored in the ECM’s memory can be read either through a hand-held diagnostic scanner plugged into the DLC or by counting the number of flashes of the “Check Engine” Malfunction Indicator Lamp (MIL) when the diagnostic test terminal of the DLC is grounded. The DLC terminal “6” (diagnostic request) is pulled “Low” (grounded) by jumpering to DLC terminal “4”, which is a ground wire.

This will signal the ECM that you want to “flash” DTC(s), if any are present. Once terminals “4” and “6” have been connected, the ignition switch must be moved to the “ON” position, with the engine not running. At this point, the “Check Engine” MIL should flash DTC12 three times consecutively.

This would be the following flash, sequence: “flash, pause, flash-flash, long pause, flash, pause, flash-flash, long pause, flash, pause, flash-flash”. DTC 12 indicates that the ECM’s diagnostic system is operating. If DTC 12 is not indicated, a problem is present within the diagnostic system itself, and should be addressed by consulting the appropriate diagnostic chart in DRIVEABILITY AND EMISSIONS.

Following the output of DTC 12, the “Check Engine”MIL will indicate a DTC three times if a DTC is present, or it will simply continue to output DTC12. If more than one DTC three has been stored in the ECM’s memory, the DTC(s) will be output from the lowest to the highest, with each DTC being displayed three times.

Reading Diagnostic Trouble Codes Using a TECH 2

The procedure for reading diagnostic trouble code(s) is to used a diagnostic Tech 2. When reading DTC(s), follow instructions supplied by Tech 2 manufacturer.

For the 1998 model year, Isuzu dealer service departments will continue to use Tech 2.

Clearing Diagnostic Trouble Codes

IMPORTANT: Do not clear DTCs unless directed to do so by the service information provided for each diagnostic procedure. When DTCs are cleared, the Freeze Frame and Failure Record data which may help diagnose an intermittent fault will also be erased from memory.

If the fault that caused the DTC to be stored into memory has been corrected, the Diagnostic Executive will begin to count the “warm-up” cycles with no further faults detected, the DTC will automatically be cleared from the ECM memory.

To clear Diagnostic Trouble Codes (DTCs), use the Tech 2 “clear DTCs” or “clear information” function. When clearing DTCs follow instructions supplied by the Tech 2 manufacturer.

When a Tech 2 is not available, DTCs can also be cleared by disconnecting *one* of the following sources for at least thirty (30) seconds.

NOTE: To prevent system damage, the ignition key must be “OFF” when disconnecting or reconnecting battery power.

- The power source to the control module. Examples: fuse, pigtail at battery ECM connectors etc.
- The negative battery cable. (Disconnecting the negative battery cable will result in the loss of other on-board memory data, such as preset radio tuning).

On-Board Diagnosis (Self-Diagnosis)

1. The Engine Control Module (ECM) conducts a self-test of most of the wiring and components in the system each time the key is turned to ON, and can detect faults in the system while the key is ON. If a fault is detected, the ECM will store a trouble code in memory and flash the CHECK ENGINE indicator to alert the driver.
2. The Diagnostic Trouble Codes (DTC) can be displayed by shorting together terminals and the Data Link Connector (DLC) located below Instrument Panel of drivers side.

   The CHECK ENGINE indicator will flash DTC 12 three times, followed by any DTC.If several DTC are stored, each DTC will be displayed three times. The DTC will be displayed in numerical order. The DTC display will continue as long as the DLC is shorted.

   Some DTC can cause other DTC to be stored, It is important to diagnose and repair the lowest numbered DTC first before going on to the higher numbered DTC.

Normal	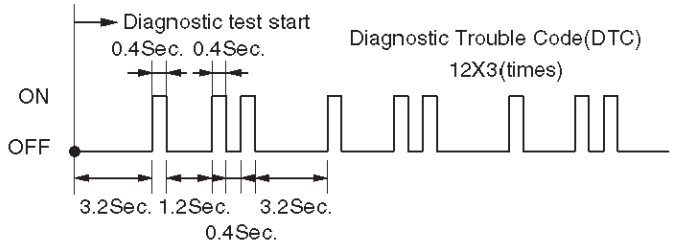
Abnormal	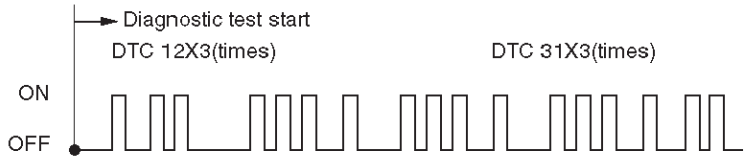

060RW031

Tech 2 Scan Tool

From 98 MY, Isuzu dealer service departments are recommended to use Tech 2. Please refer to Tech 2 user guide.

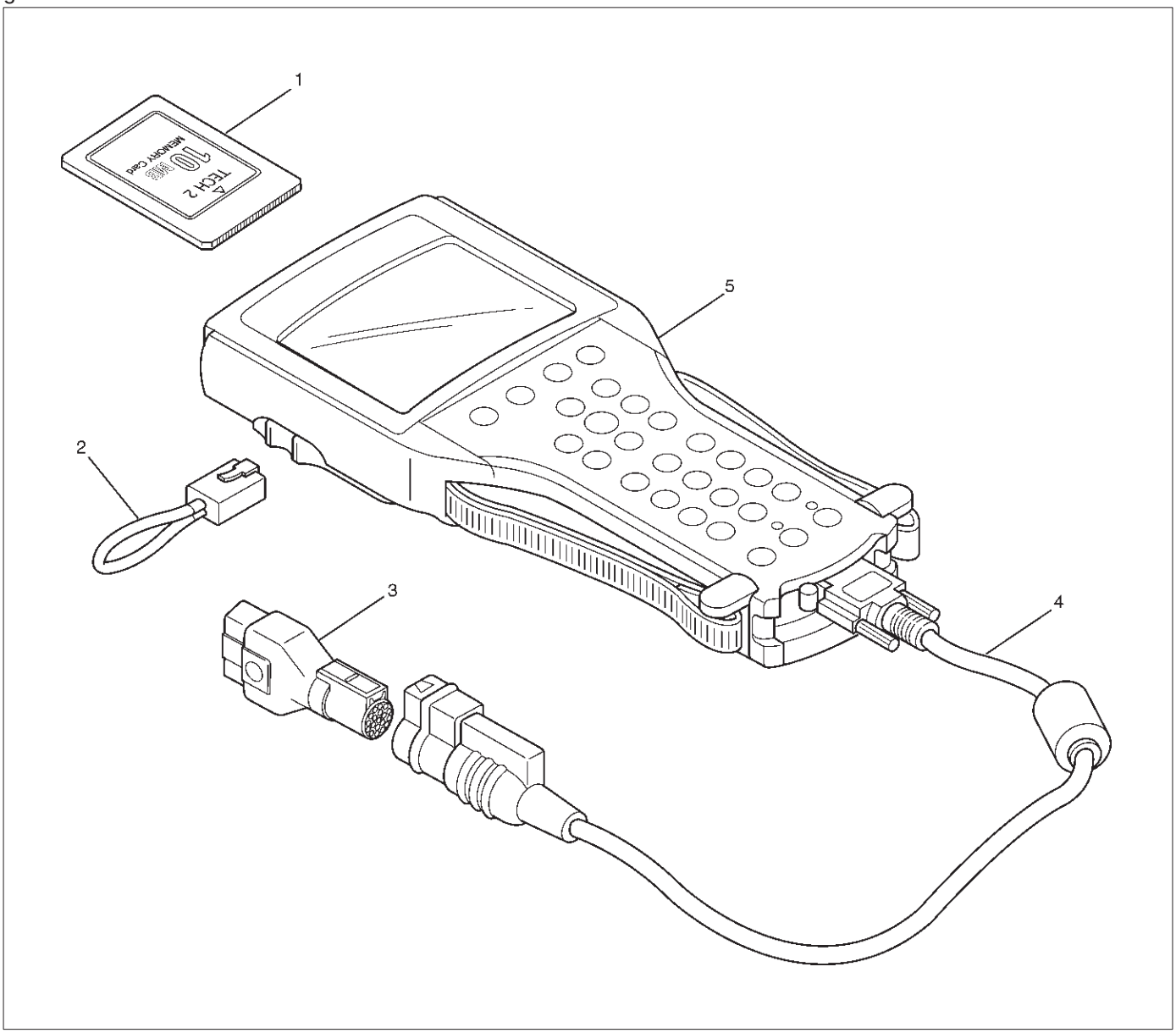

901RW180

Legend

(1) PCMCIA Card
(2) RS 232 Loop Back Connector
(3) SAE 16/19 Adaptor
(4) DLC Cable
(5) Tech–2

Getting Started

- Before operating the Isuzu PCMCIA card with the Tech 2, the following steps must be performed:

1. The Isuzu 98 System PCMCIA card (1) inserts into the Tech 2 (5).
2. Connect the SAE 16/19 adapter (3) to the DLC cable (4).
3. Connect the DLC cable to the Tech 2 (5)
4. Make sure the vehicle ignition is off.
5. Connect the Tech 2 SAE 16/19 adapter to the vehicle DLC.
6. The vehicle ignition turns on.
7. Verify the Tech 2 power up display.

012RW105

NOTE: The RS232 Loop back connector is only to use for diagnosis of Tech 2 and refer to user guide of the Tech 2.

Operating Procedure

The power up screen is displayed when you power up the tester with the Isuzu systems PCMCIA card. Follow the operating procedure below.

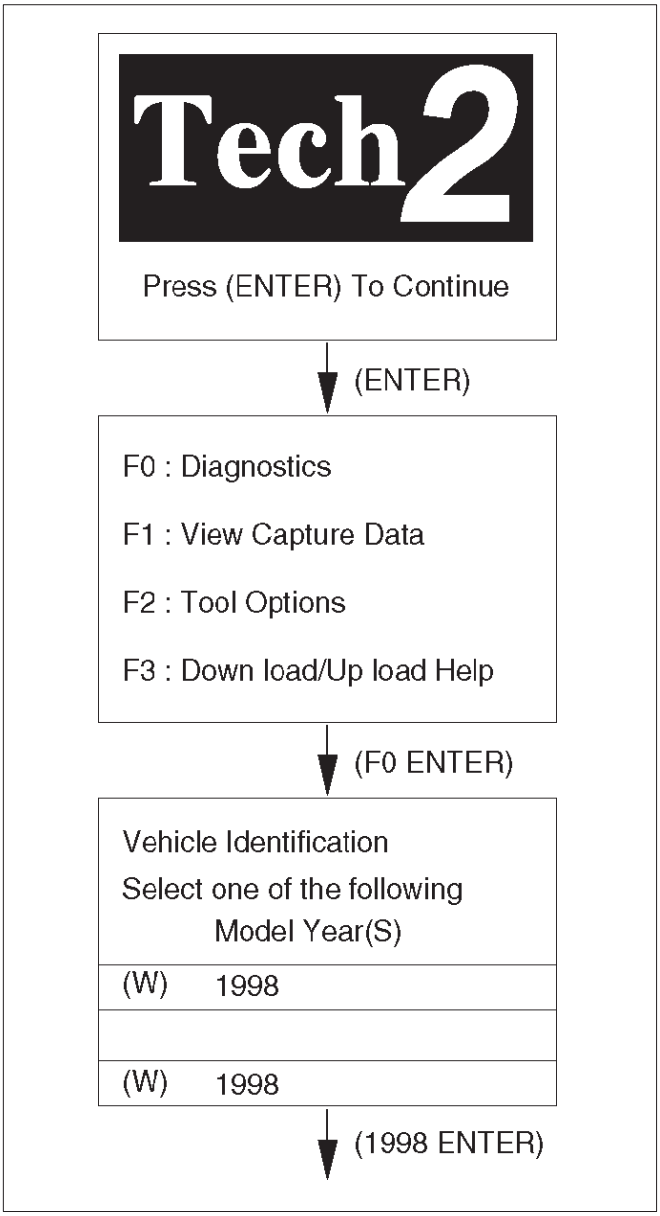

060RW014

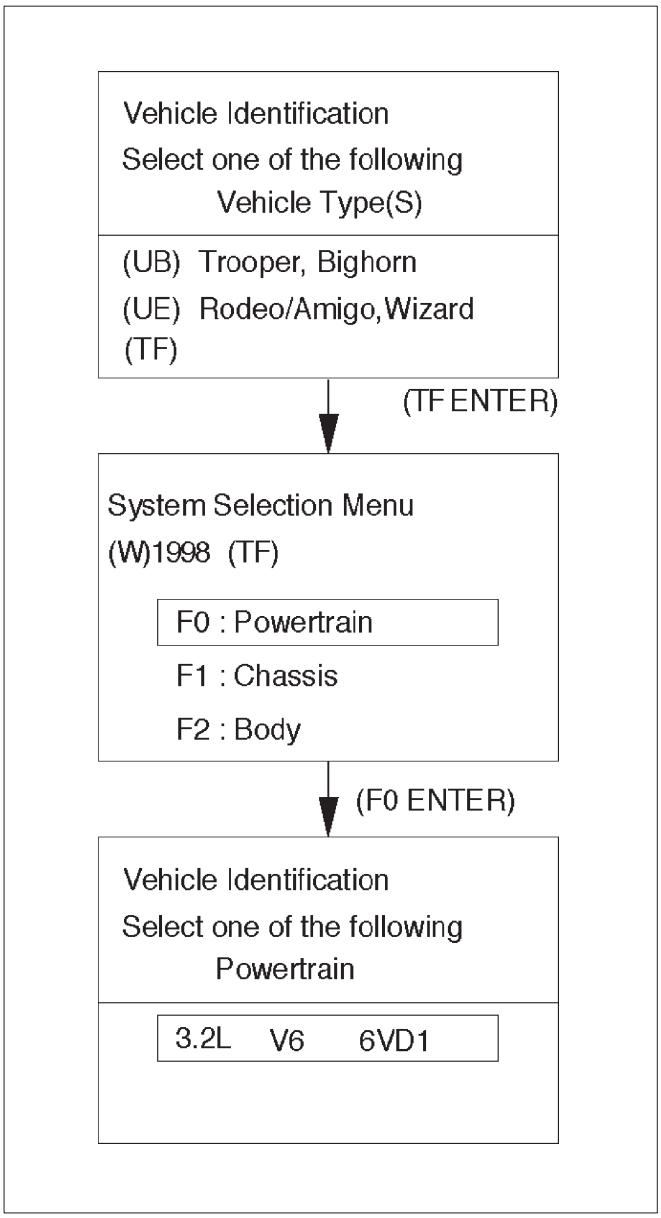

060RW032

Menu

- The following table shows, which functions are used the available equipment versions.

F0: Diagnostic Trouble Codes F0: Read DTC Info Ordered By Priority F1: Clear DTC Information F2: DTC Information F0: History F1: MIL SVS or Message Requested F2: Last Test Failed F3: Test Failed Since Code Cleared F4: Not Ran Since Code Cleared F5: Failed This Ignition F3: Freeze Frame Data/Failure Record
F1: Data Display F0: Engine Data
F2: Snapshot
F3: Miscellaneous Tests F0: Lamps F0: MIL F1: Relays F1: A/C Relay F2: Fuel Pump Relay F2: EVAP F0: Canister Purge Solenoid F3: IAC System F0: RPM Control F1: IAC Control F4: Fuel System F1: Fuel Trim Reset

DTC Modes

On OBD passenger cars there are three options available in the Tech 2 DTC mode to display the enhanced information available. A description of the new modes, DTC Info and Specific DTC, follows. After selecting DTC, the following menu appears:

- DTC Info
- Clear Info
- Read DTC Info Ordered By Priority
- Freeze Frame

The following is a brief description of each of the sub menus in DTC Info. The order in which they appear here is alphabetical and not necessarily the way they will appear on the Tech 2.

DTC Information Mode

Use the DTC info mode to search for a specific type of stored DTC information. There are six choices. The service manual may instruct the technician to test for DTCs in a certain manner. Always follow published service procedures.

To get a complete description of any status, press the "Enter" key before pressing the desired F-key. For example, pressing "Enter" then an F-key will display a definition of the abbreviated Tech 2 status.

Fail This Ignition

This selection will display all DTCs that have failed during the present ignition cycle.

History

This selection will display only DTCs that are stored in the PCM's history memory. It will not display Type B DTCs that have not requested the MIL ("Check Engine" lamp). It will display all type A and B DTCs that have requested the MIL and have failed within the last 40 warm-up cycles. In addition, it will display all type C and type D DTCs that have failed within the last 40 warm-up cycles.

Last Test Failed

This selection will display only DTCs that have failed the last time the test ran. The last test may have run during a previous ignition cycle if a type A or type B DTC is displayed. For type C and type D DTCs, the last failure must have occurred during the current ignition cycle to appear as Last Test Fail.

MIL SVC or Message Requested

This selection will display only DTCs that are requesting the MIL. Type C and type D DTCs cannot be displayed using this option. This selection will report type B DTCs only after the MIL has been requested.

Not Run Since Code Cleared

This option will display up to 33 DTCs that have not run since the DTCs were last cleared. Since any displayed DTCs have not run, their condition (passing or failing) is unknown.

Test Failed Since Code Cleared

This selection will display all active and history DTCs that have reported a test failure since the last time DTCs were cleared. DTCs that last failed more than 40 warm-up cycles before this option is selected will not be displayed.

Primary System-Based Diagnostics

Primary System-Based Diagnostics

There are primary system-based diagnostics which evaluate system operation and its effect on vehicle emissions. The primary system-based diagnostics are listed below with a brief description of the diagnostic function:

Oxygen Sensor Diagnosis

The fuel control heated oxygen sensors are diagnosed for the following conditions:

- Inactive signal (output steady at bias voltage – approx. 450 mV)
- Signal fixed high
- Signal fixed low

If the oxygen sensor pigtail wiring, connector or terminal are damaged, the entire oxygen sensor assembly must be replaced. DO NOT attempt to repair the wiring, connector or terminals. In order for the sensor to function properly, it must have clean reference air provided to it. This clean air reference is obtained by way of the oxygen sensor wire(s). Any attempt to repair the wires, connector or terminals could result in the obstruction of the reference air and degrade oxygen sensor performance. Refer to *On-Vehicle Service Heated Oxygen Sensors.*

Fuel Control Heated Oxygen Sensors

The main function of the fuel control heated oxygen sensors is to provide the control module with exhaust stream oxygen content information to allow proper fueling and maintain emissions within mandated levels. After it reaches operating temperature, the sensor will generate a voltage, inversely proportional to the amount of oxygen present in the exhaust gases. The control module uses the signal voltage from the fuel control heated oxygen sensors while in closed loop to adjust fuel injector pulse width. While in closed loop, the ECM can adjust fuel delivery to maintain an air/fuel ratio which allows the best combination of emission control and driveability. The fuel control heated oxygen sensors are also used to determine catalyst efficiency.

HO2S Heater

Heated oxygen sensors are used to minimize the amount of time required for closed loop fuel control to begin operation and to allow accurate catalyst monitoring. The oxygen sensor heater greatly decreases the amount of time required for fuel control sensors to become active. Oxygen sensor heaters are required by catalyst monitor and sensors to maintain a sufficiently high temperature which allows accurate exhaust oxygen content readings further away from the engine.

Fuel Trim System Monitor Diagnostic Operation

Fuel Trim System Monitor Diagnostic Operation

This system monitors the averages of short-term and long-term fuel trim values. If these fuel trim values stay at their limits for a calibrated period of time, a malfunction is indicated. The fuel trim diagnostic compares the averages of short-term fuel trim values and long-term fuel trim values to rich and lean thresholds. If either value is within the thresholds, a pass is recorded. If both values are outside their thresholds, a rich or lean DTC will be recorded.

The fuel trim system diagnostic also conducts an intrusive test. This test determines if a rich condition is being caused by excessive fuel vapor from the EVAP canister. In order to meet OBD requirements, the control module uses weighted fuel trim cells to determine the need to set a fuel trim DTC. A fuel trim DTC can only be set if fuel trim counts in the weighted fuel trim cells exceed specifications. This means that the vehicle could have a fuel trim problem which is causing a problem under certain conditions (i.e., engine idle high due to a small vacuum leak or rough idle due to a large vacuum leak) while it operates fine at other times. No fuel trim DTC would set (although an engine idle speed DTC or HO2S DTC may set). Use a Tech 2 to observe fuel trim counts while the problem is occurring.

A fuel trim DTC may be triggered by a number of vehicle faults. Make use of all information available (other DTCs stored, rich or lean condition, etc.) when diagnosing a fuel trim fault.

Fuel Trim Cell Diagnostic Weights

No fuel trim DTC will set regardless of the fuel trim counts in cell 0 unless the fuel trim counts in the weighted cells are also outside specifications. This means that the vehicle could have a fuel trim problem which is causing a problem under certain conditions (i.e. engine idle high due to a small vacuum leak or rough due to a large vacuum leak) while it operates fine at other times. No fuel trim DTC would set (although an engine idle speed DTC or HO2S DTC may set). Use a Tech 2 to observe fuel trim counts while the problem is occurring.

On-Board Diagnostic (OBD) System Check

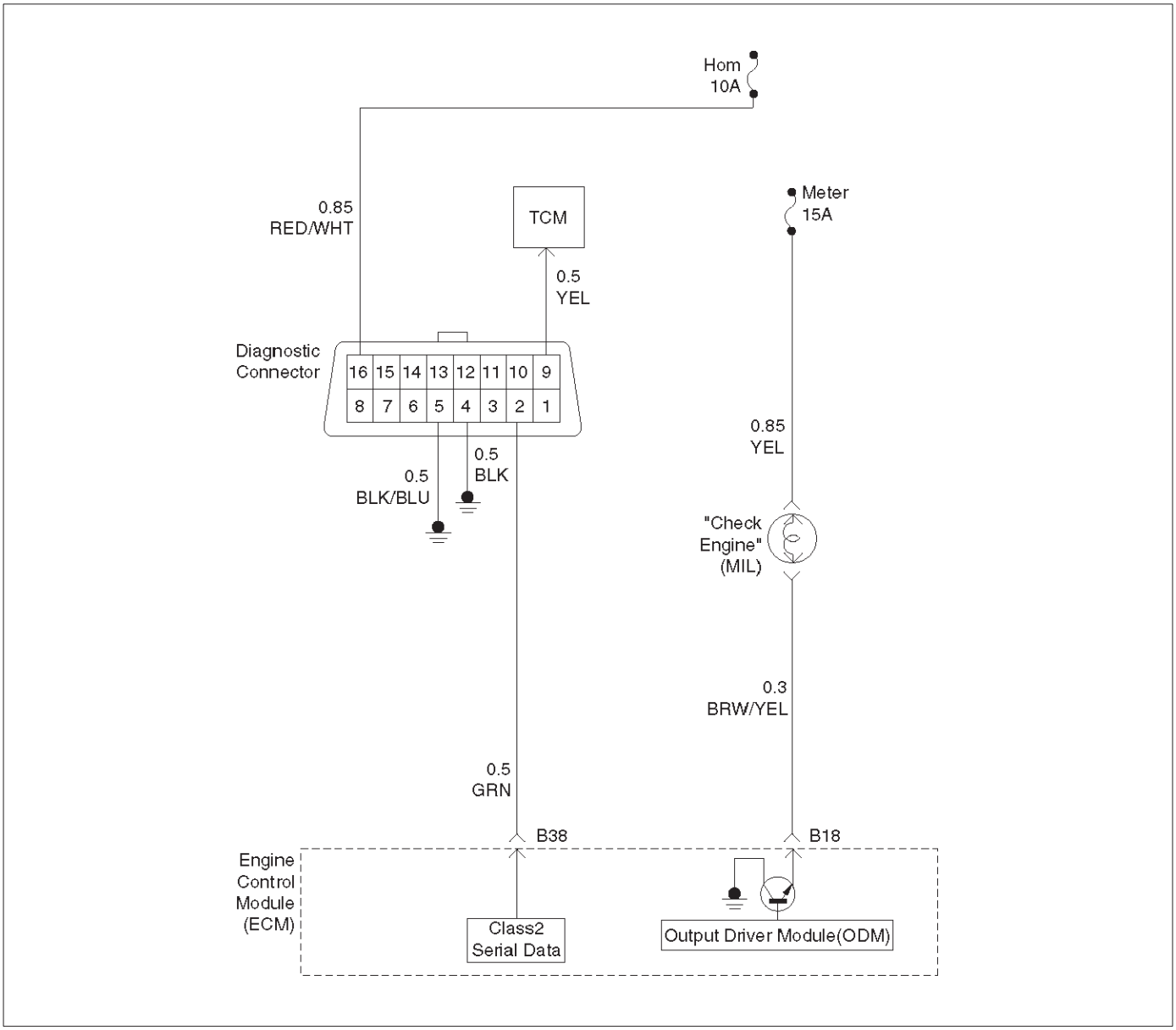

060RW045

Circuit Description

The on-board diagnostic system check is the starting point for any driveability complaint diagnosis. Before using this procedure, perform a careful visual/physical check of the ECM and engine grounds for cleanliness and tightness.

The on-board diagnostic system check is an organized approach to identifying a problem created by an electronic engine control system malfunction.

Diagnostic Aids

An intermittent may be caused by a poor connection, rubbed-through wire insulation or a wire broken inside the insulation. Check for poor connections or a damaged harness. Inspect the ECM harness and connector for improper mating, broken locks, improperly formed or damaged terminals, poor terminal-to-wire connection, and damaged harness.

Test Description

Number(s) below refer to the step number(s) on the Diagnostic Chart:

1. The MIL (“Check Engine” lamp) should be “ON” steady with the ignition “ON”/engine “OFF.” If not, the “No Malfunction Indicator Lamp (MIL)” chart should be used to isolate the malfunction.
2. Checks the Class 2 data circuit and ensures that the ECM is able to transmit serial data.
3. This test ensures that the ECM is capable of controlling the MIL (“Check Engine” lamp) and the MIL (“Check Engine” lamp) driver circuit is not shorted to ground.
4. If the engine will not start, the *Cranks But Will Not Run* chart should be used to diagnose the condition.
7. A Tech 2 parameter which is not within the typical range may help to isolate the area which is causing the problem.

10. This vehicle is equipped with a ECM which utilizes an electrically erasable programmable read only memory (EEPROM).

On- Board Diagnostic (OBD) System Check

Step	Action	Value(s)	Yes	No
1	1. Ignition “ON,” engine “OFF.” 2. Observe the malfunction indicator lamp (MIL or “Check Engine” lamp). Is the MIL (“Check Engine” lamp)“ON?”	—	Go to *Step 2*	Go to *No MIL (“Check Engine” lamp)*
2	1. Ignition “OFF.” 2. Install a Tech 2. 3. Ignition “ON.” 4. Attempt to display ECM engine data with the Tech 2. Does the Tech 2 display ECM data?	—	Go to *Step 3*	Go to *Step 8*
3	1. Using the Tech 2 output tests function, select MIL (“Check Engine” lamp) dash lamp control and command the MIL (“Check Engine” lamp) “OFF.” 2. Observe the MIL (“Check Engine” lamp). Did the MIL (“Check Engine” lamp) turn “OFF?”	—	Go to *Step 4*	Go to *MIL (“Check Engine” lamp) On Steady*
4	Attempt to start the engine. Did the engine start and continue to run?	—	Go to *Step 5*	Go to *Cranks But Will Not Run*
5	Select “Display DTCs” with the Tech 2. Are any DTCs stored?	—	Go to *Step 6*	Go to *Step 7*
6	Are two or more of the following DTCs stored? P0107, P0108, P0113, P0118, P0122, P0123.	—	Go to “Multiple ECM Information Sensor DTCs Set”	Go to applicable DTC table
7	Compare ECM data values displayed on the Tech 2 to the typical engine scan data values. Are the displayed values normal or close to the typical values?	—	Refer to Typical scan data value	Refer to indicated *Component System Checks*
8	1. Ignition “OFF,” disconnect the ECM. 2. Ignition “ON,” engine “OFF.” 3. Check the Class 2 data circuit for an open, short to ground, or short to voltage. Also, check the DLC ignition feed circuit for an open or short to ground and the DLC ground circuit for an open. 4. If a problem is found, repair as necessary. Was a problem found?	—	Go to *Step 2*	Go to *Step 9*
9	1. Attempt to reprogram the ECM. Refer to *On-Vehicle Service* in *Engine Control Module and Sensors* for procedures. 2. Attempt to display ECM data with the Tech 2. Does the Tech 2 display ECM engine data?	—	Go to *Step 2*	Go to *Step 10*
10	Replace the ECM. Is the action complete?	—	Go to *Step 2*	—

A/C Clutch Control Circuit Diagnosis

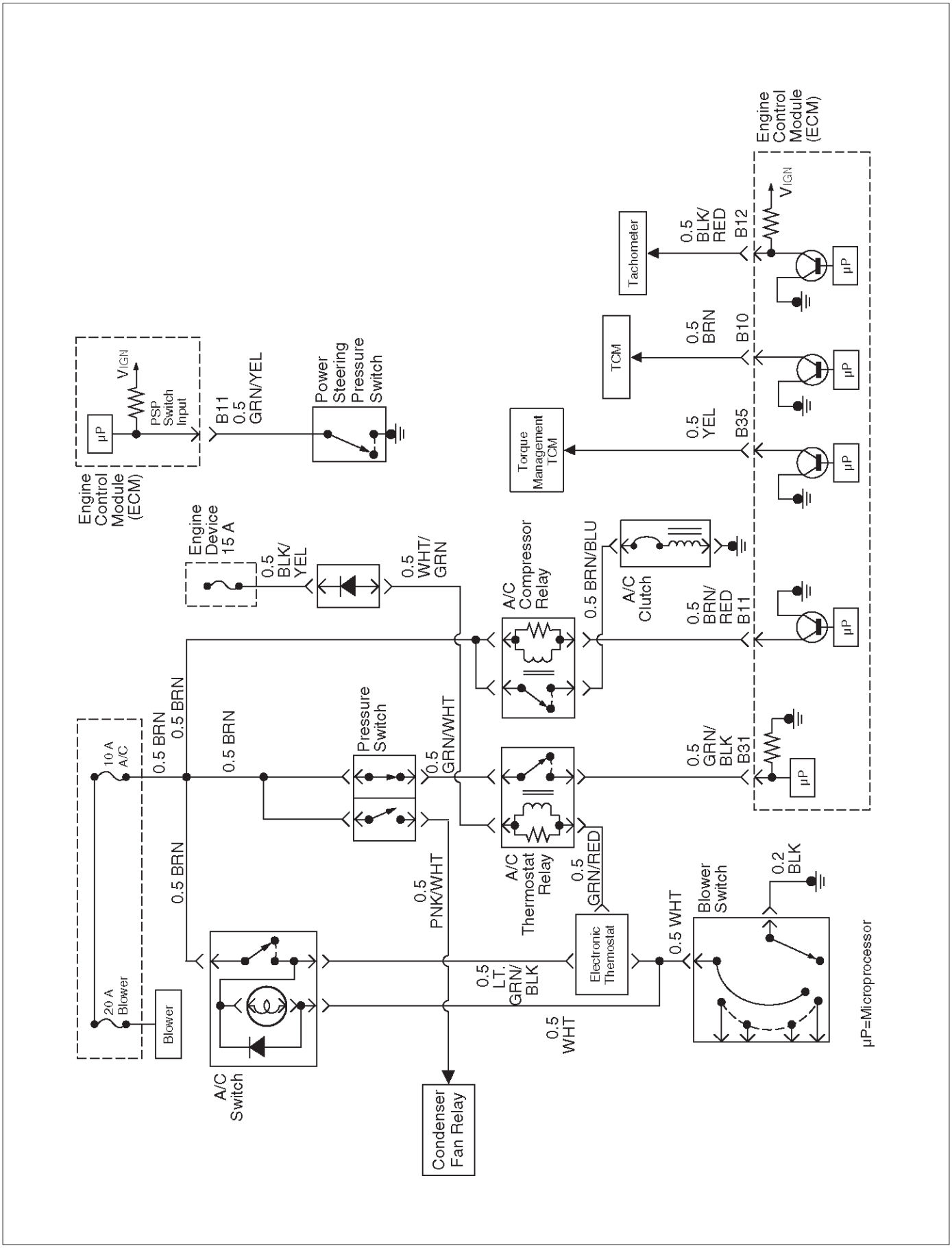

060RW041

Circuit Description

When air conditioning and blower fan are selected, and if the system has a sufficient refrigerant charge, a 12-volt signal is supplied to the A/C request input of the Engine Control Module ECM. The A/C request signal may be temporarily canceled during system operation by the electronic thermostat in the evaporator case. The electronic thermostat may intermittently remove the control circuit ground for the A/C thermostat relay to prevent the evaporator from forming ice. When the A/C request signal is received by the ECM, the ECM supplies a ground from the compressor clutch relay if the engine operating conditions are within acceptable ranges. With the A/C compressor relay energized, voltage is supplied to the compressor clutch coil.

The ECM will enable the compressor clutch to engage whenever A/C has been selected with the engine running, unless any of the following conditions are present:

- The throttle is greater than 90%.
- The ignition voltage is below 10.5 volts.
- The engine speed is greater than 4500 RPM for 5 seconds or 5400 RPM.
- The engine coolant temperature (ECT) is greater than 125 ˚C (257 ˚F).
- The intake air temperature (IAT) is less than 5˚C (41˚F).
- The power steering pressure switch signals a cramped position.

Diagnostic Aids

To diagnose an the intermittent fault, check for the following conditions:

- Poor connection at the ECM–Inspect connections for backed-out terminals, improper mating, broken locks, improperly formed or damaged terminals, and poor terminal-to-wire connection.
- Damaged harness–Inspect the wiring harness for damage. If the harness appears to OK, observe the A/C clutch while moving connectors and wiring harnesses related to the A/C. A sudden clutch malfunction will indicate the source of the intermittent fault.

A/C Clutch Diagnosis

This chart should be used for diagnosing the electrical portion of the A/C compressor clutch circuit. A Tech 2 will be used in diagnosing the system. The Tech 2 has the ability to read the A/C request input to the ECM. The Tech 2 can display when the ECM has commanded the A/C clutch “ON.” The Tech 2 should have the ability to override the A/C request signal and energize the A/C compressor relay.

Test Description

IMPORTANT: Do not engage the A/C compressor clutch with the engine running if an A/C mode is not selected at the A/C control switch.

The numbers below refer to the step numbers on the Diagnostic Chart:

3. This a test determine is the problem is with the refrigerant system. If the switch is open, A/C pressure gauges will be used to determine if the pressure switch is faulty or if the system is partially discharged or empty.
4. Although the normal complaint will be the A/C clutch failing to engage, it is possible for a short circuit to cause the clutch to run when A/C has not been selected. This step is a test for that condition.
7. There is an extremely low probability that both relays will fail at the same time, so the substitution process is one way to check the A/C Thermostat relay. Use a known good relay to do a substitution check.
9. The blower system furnishes a ground for the A/C control circuit, and it also shares a power source through the Heater and A/C Relay. The blower must be “ON” in order to test the A/C system.

A/C Clutch Control Circuit Diagnosis

Step	Action	Value(s)	Yes	No
1	Was the “On-Board Diagnostic (OBD) System Check” performed?	—	Go to *Step 2*	Go to *OBD System Check*
2	Are any other DTCs stored?	—	Go to the other DTC chart(s) first	Go to *Step 3*
3	1. Disconnect the electrical connector at the pressure switch located on the receiver/drier. 2. Use an ohmmeter to check continuity across the pressure switch (BRN to GRN/WHT). Is the pressure switch open?	—	Go to Air *Conditioning* to diagnose the cause of the open pressure switch	Go to *Step 4*

A/C Clutch Control Circuit Diagnosis (Cont'd)

Step	Action	Value(s)	Yes	No
4	**IMPORTANT:** Before continuing with the diagnosis, the following conditions must be met: ● The intake air temperature must be greater than 15˚C. (60˚F). ● The engine coolant temperature must be less than 119˚C (246˚F). 1. A/C "OFF." 2. Start the engine and idle for 1 minute. 3. Observe the A/C compressor. Is the A/C compressor clutch engaged even though A/C has not been requested?	—	Go to *Step 45*	Go to *Step 5*
5	1. Idle the engine. 2. A/C "ON". 3. Blower "ON". 4. Observe the A/C compressor. Is the A/C compressor magnetic clutch engaged?	—	Refer to *Diagnostic Aids*	Go to *Step 6*
6	1. Engine idling. 2. A/C "ON". 3. Blower "ON". 4. Observe the "A/C Request" display on the Tech 2. Does the "A/C Request" display indicate "Yes?"	—	Go to *Step 34*	Go to *Step 7*
7	Temporarily substitute the A/C compressor relay in place of the A/C thermostat relay, then repeat Step 5. Did the "A/C Request" display indicate "Yes?"	—	Go to *Step 8*	Go to *Step 9*
8	Replace the original A/C thermostat relay. Is the action complete?	—	Verify repair	—
9	Dose the blower operate?	—	Go to *Step 10*	Go to *Step 11*
10	Repair the blower. Is the action complete?	—	Verify repair	—
11	Check for a faulty 10a A/C fuse in the passenger compartment fuse panel. Was the 10A fuse OK?	—	Go to *Step 13*	Go to *Step 12*
12	Check for short circuit and make repairs if necessary. Replace the 10A A/C fuse. Is the action complete?	—	Verify repair	—
13	1. Ignition "ON." 2. Use a DVM to check voltage at the positive A/C switch wire (BRN). Was voltage equal to the specified value?	B+	Go to *Step 15*	Go to *Step 14*
14	Repair the open wire (BRN) between the A/C switch and the A/C fuse. Is the action complete?	—	Verify repair	—

A/C Clutch Control Circuit Diagnosis (Cont'd)

Step	Action	Value(s)	Yes	No
15	1. Remove the glove box to gain access to the A/C thermostat. 2. Disconnect the thermostat connector. 3. Attach a fused jumper between ground and the GRN/RED wire at the thermostat. 4. A/C "ON." 5. Blower "ON." Dose A/C request indicate "YES" on the Tech 2?	—	Go to *Step 16*	Go to *Step 23*
16	1. Ignition "ON." 2. A/C switch "ON". 3. Use a DVM to check voltage at the electronic A/C thermostat. Was voltage equal to the specified value?	B+	Go to *Step 20*	Go to *Step 17*
17	Check for an open (LT GRN/BLK) wire between the thermostat and the A/C switch. Was the wire open?	—	Go to *Step 18*	Go to *Step 19*
18	Repair the open wire (LT GRN/BLK) between the thermostat and the A/C switch. Is the action complete?	—	Verify repair	—
19	Replace the A/C switch. Is the action complete?	—	Verify repair	—
20	Use an ohmmeter to check continuity between the electronic A/C thermostat and the blower switch. Was there an open circuit?	—	Go to *Step 21*	Go to *Step 22*
21	Repair the open wire (WHT) between the thermostat and the blower switch. Is the action complete?	—	Verify repair	—
22	Replace the electronic A/C thermostat. Is the an action complete?	—	Verify repair	—
23	Check for an open circuit between A/C thermostat relay and ECM A/C request terminal (B-31). Was there an open circuit?	—	Go to *Step 24*	Go to *Step 25*
24	Repair the open circuit between the ECM and A/C thermostat relay. Is the action complete?	—	Verify repair	—
25	Check for an open circuit between the engine device fuse and the A/C thermostat relay (WHT/GRN). Was there an open circuit?	—	Go to *Step 26*	Go to *Step 27*
26	Repair the open circuit between the engine device fuse and the A/C thermostat relay. Is the action complete?	—	Verify repair	—
27	1. Ignition "ON." 2. Use a DVM to check voltage at the A/C pressure switch (BRN). Was voltage equal to the specified value?	B+	Go to *Step 29*	Go to *Step 28*

A/C Clutch Control Circuit Diagnosis (Cont'd)

Step	Action	Value(s)	Yes	No
28	Repair the open circuit between the 10A A/C fuse and the pressure switch. Is the action complete?	—	Verify repair	—
29	Use an ohmmeter to check continuity between the pressure switch and the A/C thermostat relay. Was the circuit open?	—	Go to *Step 30*	Go to *Step 31*
30	Repair the open circuit between the pressure switch and the A/C thermostat relay. Is the action complete?	—	Verify repair	—
31	Check for damaged pin or terminal at the ECM. Was a damaged pin or terminal found?	—	Go to *Step 32*	Go to *Step 33*
32	Repair the damaged pin or terminal. Is the action complete?	—	Verify repair	—
33	Replace the ECM. Is the action complete?	—	Verify repair	—
34	1. Remove the A/C compressor relay. 2. Ignition "ON." 3. Use a DVM to check voltage at both of the BRN wires at the A/C compressor relay socket. Is the voltage equal to the specified value?	B+	Go to *Step 36*	Go to *Step 35*
35	Repair the faulty BRN wire between the A/C fuse and the A/C compressor relay . Is the action complete?	—	Verify repair	—
36	1. A/C compressor relay removed. 2. Engine idling. 3. A/C "ON." 4. Blower "ON." 5. Use a DVM to measure voltage between the GRY/RED wire at the A/C compressor relay socket and battery+. Did the DVM indicate the specified value?	B+	Go to *Step 40*	Go to *Step 37*
37	Check for an open GRY/RED wire between ECM terminal B-11 and the A/C compressor relay. Was the wire open?	—	Go to *Step 38*	Go to *Step 39*
38	Repair the open GRY/RED wire between the ECM and the A/C compressor relay. Is the action complete?	—	Verify repair	—
39	Check for a damaged pin or terminal at B-11 of the ECM. Was a damaged pin or a terminal found?	—	Go to *Step 32*	Go to *Step 33*

A/C Clutch Control Circuit Diagnosis (Cont'd)

Step	Action	Value(s)	Yes	No
40	1. A/C compressor relay removed. 2. Connect a fused jumper at the A/C compressor relay socket between either BRN wire and the GRN wire. 3. Engine idling. 4. A/C "ON." 5. Blower "ON." Did the compressor magnetic clutch engage?	—	Go to *Step 41*	Go to *Step 42*
41	Repair the A/C compressor relay. Is the action complete?	—	Verify repair	—
42	Check for an open circuit between the A/C compressor relay and the A/C clutch. Was an open circuit found?	—	Go to *Step 43*	Go to *Step 44*
43	Repair the open circuit between the compressor Clutch and the A/C compressor relay. Is the action complete?	—	Verify repair	—
44	Service the compressor clutch or replace the compressor due to a faulty internal overheat switch. Is the action complete?	—	Verify repair	—
45	1. Remove the A/C compressor relay. 2. Idle the engine. Is the compressor clutch still engaged when A/C is not selected?	—	Go to *Step 46*	Go to *Step 47*
46	Repair the short to voltage between the A/C clutch and A/C compressor relay. Is the action complete?	—	Verify repair	—
47	1. Reinstall the A/C compressor relay. 2. Remove the A/C thermostat relay. 3. Engine idling. Is the compressor clutch still engaged when A/C is not selected?	—	Go to *Step 48*	Go to *Step 50*
48	Use a DVM to check for a short to ground between the A/C compressor relay and B-11 of the ECM. Was a short detected?	—	Go to *Step 49*	Go to *Step 33*
49	Repair the short to ground between the ECM and A/C compressor relay. Is the action complete?	—	Verify repair	—
50	Repair the short to ground between the A/C thermostat relay and the electronic thermostat. Is the action complete?	—	Verify repair	—

Electronic Ignition System Diagnosis

If the engine cranks but will not run or immediately stalls, the Engine Cranks But Will Not Start chart must be used to determine if the failure is the ignition system or the fuel system. If DTC P0341, or P0336 is set, the appropriate diagnostic trouble code chart must be used for diagnosis. If a misfire is being experienced with no DTC set, refer to the *Symptoms* section for diagnosis.

Visual Check of The Evaporative Emission Canister

- If the canister is cracked or damaged, replace the canister.
- If fuel is leaking from the canister, replace the canister and check hoses and hose routing.

Fuel Metering System Check

Some failures of the fuel metering system will result in an "Engine Cranks But Will Not Run" symptom. If this condition exists, refer to the *Engine Cranks But Will Not Run* chart. This chart will determine if the problem is caused by the ignition system, the ECM, or the fuel pump electrical circuit.

Refer to *Fuel System Electrical Test* for the fuel system wiring schematic.

If there is a fuel delivery problem, refer to *Fuel System Diagnosis*, which diagnoses the fuel injectors, the fuel pressure regulator, and the fuel pump. If a malfunction occurs in the fuel metering system, it usually results in either a rich HO2S signal or a lean HO2S signal. This condition is indicated by the HO2S voltage, which causes the ECM to change the fuel calculation (fuel injector pulse width) based on the HO2S reading. Changes made to the fuel calculation will be indicated by a change in the long term fuel trim values which can be monitored with a Tech 2. Ideal long term fuel trim values are around 0%; for a lean HO2S signal, the ECM will add fuel, resulting in a fuel trim value above 0%. Some variations in fuel trim values are normal because all engines are not exactly the same. If the evaporative emission canister purge is "ON," the long term fuel trim may be as low as –38%. If the fuel trim values are greater than +23%, refer to *DTC P0131,DTC P0171, and DTC 1171* for items which can cause a lean HO2S signal.

Idle Air Control (IAC) Valve

The Tech 2 displays the IAC pintle position in counts. A count of "0" indicates the ECM is commanding the IAC pintle to be driven all the way into a fully-seated position. This is usually caused by a large vacuum leak.

The higher the number of counts, the more air is being commanded to bypass the throttle blade. Refer to IAC System Check in order to diagnose the IAC system. Refer to *Rough, Unstable, or Incorrect Idle, Stalling* in *Symptoms* for other possible causes of idle problems.

Fuel System Pressure Test

A fuel system pressure test is part of several of the diagnostic charts and symptom checks. To perform this test, refer to *Fuel Systems Diagnosis.*

Fuel Injector Coil Test Procedure and Fuel Injector Balance Test Procedure

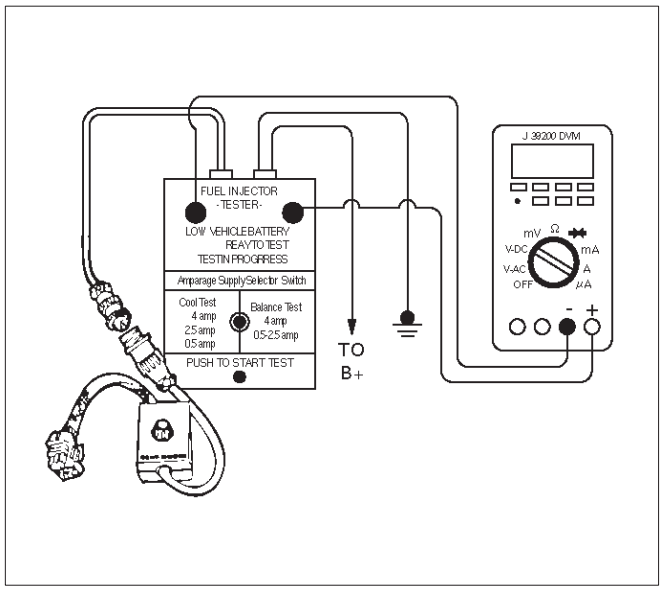

T32003

Test Description

Number(s) below refer to the step number(s) on the Diagnostic Chart:

2. Relieve the fuel pressure by connecting the 5–8840–0378–0 Fuel Pressure Gauge to the fuel pressure connection on the fuel rail.

CAUTION: In order to reduce the risk of fire and personal injury, wrap a shop towel around the fuel pressure connection. The towel will absorb any fuel leakage that occurs during the connection of the fuel pressure gauge. Place the towel in an approved container when the connection of the fuel pressure gauge is complete.

Place the fuel pressure gauge bleed hose in an approved gasoline container.

With the ignition switch "OFF," open the valve on the fuel pressure gauge.

3. Record the lowest voltage displayed by the DVM after the first second of the test. (During the first second, voltage displayed by the DVM may be inaccurate due to the initial current surge.)

Injector Specifications:

Resistance Ohms	Voltage Specification at 10˚C-35˚C (50˚F-95˚F)
11.8 – 12.6	5.7 – 6.6

- The voltage displayed by the DVM should be within the specified range.

- The voltage displayed by the DVM may increase throughout the test as the fuel injector windings warm and the resistance of the fuel injector windings changes.
- An erratic voltage reading (large fluctuations in voltage that do not stabilize) indicates an intermittent connection within the fuel injector.

5.Injector Specifications:

Highest Acceptable Voltage Reading Above/Below 35˚C/10˚C (95˚F/50˚F)	Acceptable Subtracted Value
9.5 Volts	0.6 Volts

7.The Fuel Injector Balance Test portion of this chart (Step 7 through Step 11) checks the mechanical (fuel delivery) portion of the fuel injector. An engine cool-down period of 10 minutes is necessary in order to avoid irregular fuel pressure readings due to “Hot Soak” fuel boiling.

Injector Coil Test Procedure (Steps 1-6) and Injector Balance Test Procedure (Steps 7-11)

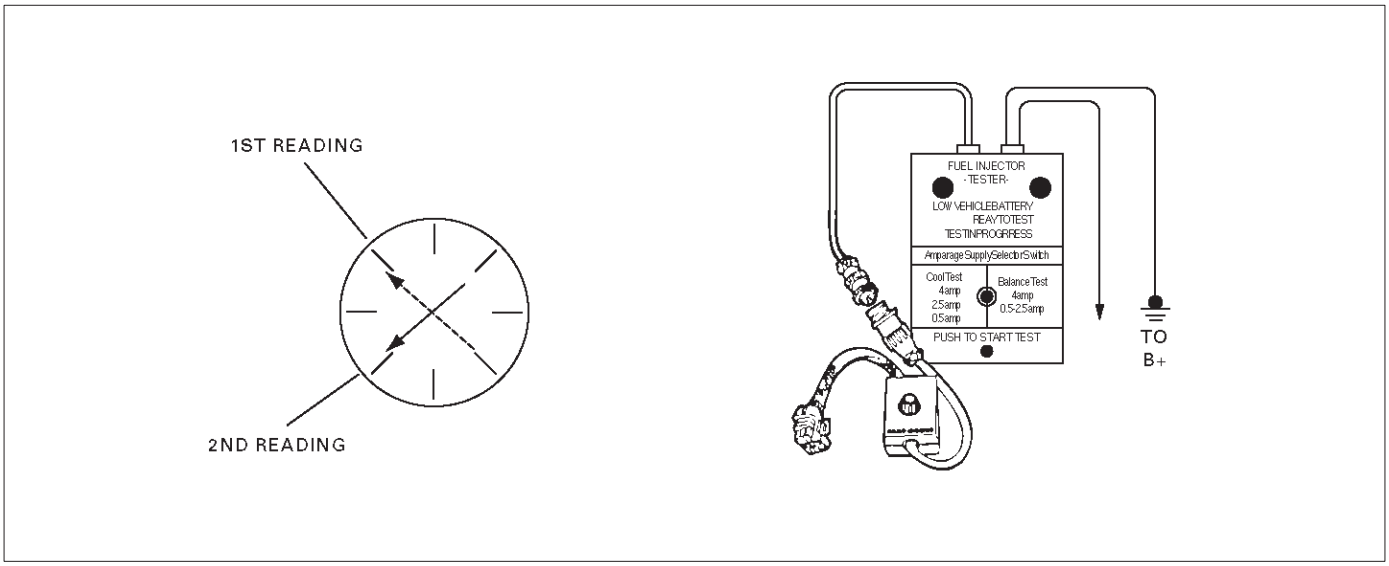

R262001

CYLINDER	1	2	3	4	5	6
1st Reading (1)	296 kpa (43 psi)	296 kpa (43 psi)	296 kpa (43 psi)	296 kpa (43 psi)	296 kpa (43 psi)	296 kpa (43 psi)
2nd Reading (2)	131 kpa (19 psi)	117 kpa (17 psi)	124 kpa (18 psi)	145 kpa (21 psi)	131 kpa (19 psi)	130 kpa (19 psi)
Amount of Drop (1st Reading–2nd Reading)	165 kpa (24 psi)	179 kpa (26 psi)	172 kpa (25 psi)	151 kpa (22 psi)	165 kpa (24 psi)	166 kpa (24 psi)
Av.drop = 166 kpa/24 psi ±10 kpa/1.5 psi = 156- 176 kpa or 22.5-25.5 psi	OK	Faulty, Rich (Too Much Fuel Drop)	OK	Faulty, Lean (Too Little Fuel Drop)	OK	OK

NOTE: These figures are examples only.

Injector Coil Test Procedure (Steps 1-6) and Injector Balance Test Procedure (Steps 7-11)

Step	Action	Value(s)	Yes	No
1	Was the “On-Board Diagnostic (OBD) System Check” performed?	—	Go to Step 2	Go to *OBD System Check*
2	1. Turn the engine “OFF.” NOTE: In order to prevent flooding of a single cylinder and possible engine damage, relieve the fuel pressure before performing the fuel injector coil test procedure. 2. Relieve the fuel pressure. Refer to *Test Description Number 2.* 3. Connect the 5–8840–2638–0 Fuel Injector Tester to B+ and ground, and to the 5–8840–2619–0 Injector Switch Box. 4. Connect the injector switch box to the grey fuel injector harness connector located at the rear of the air cleaner assembly. 5. Set the amperage supply selector switch on the fuel injector tester to the “Coil Test” 0.5 amp position. 6. Connect the leads from the 5–8840–0285–0 Digital Voltmeter (DVM) to the injector tester. Refer to the illustrations associated with the test description. 7. Set the DVM to the tenths scale (0.0). 8. Observe the engine coolant temperature. Is the engine coolant temperature within the specified values?	10˚C (50˚F) to 35˚C (95˚F)	Go to *Step 3*	Go to *Step 5*
3	1. Set injector switch box injector #1. 2. Press the “Push to Start Test” button on the fuel injector tester. 3. Observe the voltage reading on the DVM. **IMPORTANT:** The voltage reading may rise during the test. 4. Record the lowest voltage observed after the first second of the test. 5. Set the injector switch box to the next injector and repeat steps 2, 3, and 4. Did any fuel injector have an erratic voltage reading (large fluctuations in voltage that did not stabilize) or a voltage reading outside of the specified values?	5.7-6.6 V	Go to *Step 4*	Go to *Step 7*
4	Replace the faulty fuel injector(s). Refer to *Fuel Injector.* Is the action complete?	—	Go to *Step 7*	—

Injector Coil Test Procedure (Steps 1-6) and Injector Balance Test Procedure (Steps 7-11) (Cont'd)

Step	Action	Value(s)	Yes	No
5	1. Set injector switch box injector #1. 2. Press the "Push to Start Test" button on the fuel injector tester. 3. Observe the voltage reading on the DVM. **IMPORTANT:** The voltage reading may rise during the test. 4. Record the lowest voltage observed after the first second of the test. 5. Set the injector switch box to the next injector and repeat steps 2, 3, and 4. Did any fuel injector have an erratic voltage reading (large fluctuations in voltage that did not stabilize) or a voltage reading above the specified value?	9.5 V	Go to *Step 4*	Go to *Step 6*
6	1. Identify the highest voltage reading recorded (other than those above 9.5 V). 2. Subtract the voltage reading of each injector from the highest voltage selected in step 1. Repeat until you have a subtracted value for each injector. For any injector, is the subtracted Value in step 2 greater than the specified value?	0.6 V	Go to *Step 4*	Go to *Step 7*
7	**CAUTION: In order to reduce the risk of fire and personal injury, wrap a shop towel around the fuel pressure connection. The towel will absorb any fuel leakage that occurs during the connection of the fuel pressure gauge. Place the towel in an approved container when the connection of the fuel pressure gauge is complete.** 1. Connect the J 34730-1 Fuel Pressure Gauge to the fuel pressure test port. 2. Energize the fuel pump using the Tech 2. 3. Place the bleed hose of the fuel pressure gauge into an approved gasoline container. 4. Bleed the air out of the fuel pressure gauge. 5. With the fuel pump running, observe the reading on the fuel pressure gauge. Is the fuel pressure within the specified values?	296 kpa-376 kpa (43-55 psi)	Go to *Step 8*	Go to *Fuel System Diagnosis*
8	Turn the fuel pump "OFF." Does the fuel pressure remain constant?	—	Go to *Step 9*	Go to *Fuel System Diagnosis*

Injector Coil Test Procedure (Steps 1-6) and Injector Balance Test Procedure (Steps 7-11) (Cont'd)

Step	Action	Value(s)	Yes	No
9	1. Connect the 5–8840–2638–0 Fuel Injector Tester and 5–8840–2619–0 Injector Switch Box the fuel injector harness connector. 2. Set the amperage supply selector switch on the fuel injector tester to the "Balance Test" 0.5-2.5 amp position. 3. Using the Tech 2 turn the fuel pump "ON" then "OFF" in order to pressurize the fuel system. 4. Record the fuel pressure indicated by the fuel pressure gauge after the fuel pressure stabilizes. This is the first pressure reading. 5. Energize the fuel injector by depressing the "Push to Start Test" button on the fuel injector tester. 6. Record the fuel pressure indicated by the fuel pressure gauge after the fuel pressure gauge needle has stopped moving. This is the second pressure reading. 7. Repeat steps 1 through 6 for each fuel injector. 8. Subtract the second pressure reading from the first pressure reading for one fuel injector. The result is the pressure drop value. 9. Obtain a pressure drop value for each fuel injector. 10. Add all of the individual pressure drop values. This is the total pressure drop. 11. Divide the total pressure drop by the number of fuel injectors. This is the average pressure drop. Does any fuel injector have a pressure drop value that is either higher than the average pressure drop or lower than the average pressure drop by the specified value?	10 kpa (1.5 psi)	Go to *Step 10*	Go to *OBD System Check*
10	Re-test any fuel injector that does not meet the specification. Refer to the procedure in step 11. NOTE: Do not repeat any portion of this test before running the engine in order to prevent the engine from flooding. Does any fuel injector still have a pressure drop value that is either higher than the average pressure drop or lower than the average pressure drop by the specified value?	10 kpa (1.5 psi)	Go to *Step 11*	Go to *Symptoms*
11	Replace the faulty fuel injector(s). Refer to *Fuel Injector.* Is the action complete?	—	Verify repair	—

Engine Control Module ECM Diagnosis

To read and clear diagnostic trouble codes, use a Tech 2.

IMPORTANT: Use of a Tech 2 is recommended to clear diagnostic trouble codes from the ECM memory. Diagnostic trouble codes can also be cleared by turning the ignition "OFF" and disconnecting the battery power from the ECM for 30 seconds. Turning off the ignition and disconnecting the battery power from the ECM will cause all diagnostic information in the ECM memory to be cleared. Therefore, all the diagnostic tests will have to be re-run.

Since the ECM can have a failure which may affect only one circuit, following the diagnostic procedures in this section will determine which circuit has a problem and where it is.

If a diagnostic chart indicates that the ECM connections or the ECM is the cause of a problem, and the ECM is replaced, but this does not correct the problem, one of the following may be the reason:

- There is a problem with the ECM terminal connections. The terminals may have to be removed from the connector in order to check them properly.
- The problem is intermittent. This means that the problem is not present at the time the system is being checked. In this case, refer to the *Symptoms* portion of the manual and make a careful physical inspection of all components and wiring associated with the affected system.
- There is a shorted solenoid, relay coil, or harness. Solenoids and relays are turned "ON" and "OFF" by the ECM using internal electronic switches called drivers. A shorted solenoid, relay coil, or harness will not damage the ECM but will cause the solenoid or relay to be inoperative.

Multiple ECM Information Sensor DTCS Set

Circuit Description

The Engine Control Module ECM monitors various sensors to determine the engine operating conditions. The ECM controls fuel delivery, spark advance, transmission operation, and emission control device operation based on the sensor inputs.

The ECM provides a sensor ground to all of the sensors. The ECM applies 5 volts through a pull-up resistor, and determines the status of the following sensors by monitoring the voltage present between the 5-volt supply and the resistor:

- The engine coolant temperature (ETC) sensor
- The intake air temperature (IAT) sensor

The ECM provides the following sensors with a 5-volt reference and a sensor ground signal:

- The throttle position (TP) sensor
- The barometric pressure (BARO) sensor

The ECM monitors the separate feedback signals from these sensors in order to determine their operating status.

Diagnostic Aids

IMPORTANT: Be sure to inspect ECM and engine grounds for being secure and clean.

A short to voltage in one of the sensor input circuits may cause one or more of the following DTCs to be set:

- P0108
- P0113
- P0118
- P0123

IMPORTANT: If a sensor input circuit has been shorted to voltage, ensure that the sensor is not damaged. A damaged sensor will continue to indicate a high or low voltage after the affected circuit has been repaired. If the sensor has been damaged, replace it.

An open in the sensor ground circuit between the ECM and the splice will cause one or more of the following DTCs to be set:

- P0108
- P0113
- P0118
- P0123

A short to ground in the 5-volt reference A or B circuit will cause one or more of the following DTCs to be set:

- P0107
- P0122

An the in the 5-volt reference circuit A, between the ECM and the splice will cause one or more of the following DTCs to be set:

- P0122

An the in the 5-volt reference circuit B, between the ECM and the splice will cause one or more of the following DTCs to be set:

- P0107

Check for the following conditions:

- **Poor connection at ECM.** Inspect the harness connectors for backed-out terminals, improper mating, broken locks, improperly formed or damage terminals, and a poor terminal-to-wire connection.
- **Damaged harness.** Inspect the wiring harness for damage. If the harness is not damaged, observe an affected sensor's displayed value on the Tech 2 with the ignition "ON" and the engine "OFF" while you move the connectors and the wiring harnesses related to the following sensors:
  - IAT
  - ECT
  - TP
  - BARO

Multiple ECM Information Sensor DTCs Set

Step	Action	Value(s)	Yes	No
1	Was the “On-Board Diagnostic (OBD) System Check” performed?	—	Go to *Step 2*	Go to *OBD System Check*
2	1. Turn the ignition “OFF,” disconnect the ECM. 2. Turn the ignition “ON,” check the 5 volt reference A circuit for the following conditions: ● A poor connection at the ECM. ● An open between the ECM connector and the splice. ● A short to ground. ● A short to voltage. Is there an open or short?	—	Go to *Step 3*	Go to *Step 4*
3	Repair the open or short. Is the action complete?	—	Verify repair	—
4	Check the sensor ground circuit for the following conditions: ● A poor connection at the ECM or the affected sensors. ● An open between the ECM connector and the affected sensors. Is there an open or a poor connection?	—	Go to *Step 5*	Go to *Step 6*
5	Repair the open or the poor connection. Is the action complete?	—	Verify repair	—
6	Measure the voltage between the BARO sensor signal circuit at the ECM harness connector and ground. Does the voltage measure near the specified value?	0 V	Go to *Step 7*	Go to *Step 11*
7	Measure the voltage between the TP sensor signal circuit at the ECM harness connector and ground. Does the voltage measure near the specified value?	0 V	Go to *Step 8*	Go to *Step 12*
8	Measure the voltage between the IAT sensor signal circuit at the ECM harness connector and ground. Does the voltage measure near the specified value?	0 V	Go to *Step 9*	Go to *Step 13*
9	Measure the voltage between the ECT sensor signal circuit at the ECM harness connector and ground. Does the voltage measure near the specified value?	0 V	Go to *Step 10*	Go to *Step 14*
10	Measure the voltage between the TFT sensor signal circuit at the ECM harness connector and ground. Does the voltage measure near the specified value?	0 V	Go to *Step 15*	Go to *Step 16*
11	Locate and repair the short to voltage in the BARO sensor signal circuit. Is the action complete?	—	Verify repair	—
12	Locate and repair the short to voltage in the TP sensor signal circuit. Is the action complete?	—	Verify repair	—

Multiple ECM Information Sensor DTCs Set (Cont'd)

Step	Action	Value(s)	Yes	No
13	Locate and repair the short to voltage in the IAT sensor signal circuit. Is the action complete?	—	Verify repair	—
14	Locate and repair the short to voltage in the ECT sensor signal circuit. Is the action complete?	—	Verify repair	—
15	Locate and repair the short to voltage in the TFT sensor signal circuit. Is the action complete?	—	Verify repair	—
16	Replace the ECM. Is the action complete?	—	Go to *OBD System Check*	—

Tech 2 Data Definitions and Ranges

A/C CLUTCH–Tech 2 Displays ON or OFF–
Indicates whether the ECM has commanded the A/C clutch ON. Used in A/C system diagnostic.

A/C REQUEST — Tech 2 Displays YES or NO —
Indicates the state of the A/C request input circuit from the HVAC controls. The ECM uses the A/C request signal to determine whether A/C compressor operation is being requested.

AIR/FUEL RATIO — Tech 2 Range 0.0-25.5 —
Air/fuel ratio indicates the ECM commanded value. In closed loop, the air/fuel ratio should normally be displayed around "14.2–14.7." A lower air/fuel ratio indicates a richer commanded mixture, which may be seen during power enrichment or TWC protection modes. A higher air/fuel ratio indicates a leaner commanded mixture. This can be seen during deceleration fuel mode.

BARO kpa — Tech 2 Range 10-105 kpa/0.00-5.00 Volts —
The barometric pressure reading is determined from the BARO sensor signal monitored during key up and wide open throttle (WOT) conditions. The barometric pressure is used to compensate for altitude differences and is normally displayed around "61-104" depending on altitude and barometric pressure.

CHECK TRANS LAMP–AUTO TRANSMISSION–
Indicates the need to check for a DTC with the Tech 2 when the lamp is flashing 0.2 seconds ON and 0.2 seconds OFF.

CMP ACT. COUNTER –Cam Position ActivityDECEL FUEL MODE—Tech 2 Display ACTIVE or INACTVE—
"ACTIVE" displayed indicates that the ECM has detected conditions appropriate to operate in deceleration fuel mode. The ECM will command the deceleration fuel mode when it detects a closed throttle position while the vehicle is traveling over 20 mph. While in the decreasing fuel mode, the ECM will decrease the amount of fuel delivered by entering open loop and decreasing the injector pulse width.

DESIRED IDLE — Tech 2 Range 0-3187 RPM —
The idle speed that the ECM is commanding. The ECM will compensate for various engine loads based on engine coolant temperature, to keep the engine at the desired speed.

ECT — (Engine Coolant Temperature) Tech 2 Range –40˚C to 151˚C (–40˚F to 304˚F) —
The engine coolant temperature (ECT) is mounted in the coolant stream and sends engine temperature information to the ECM. The ECM applies 5 volts to the ECT sensor circuit. The sensor is a thermistor which changes internal resistance as temperature changes. When the sensor is cold (high resistance), the ECM monitors a high signal voltage and interprets that as a cold engine. As the sensor warms (decreasing resistance), the voltage signal will decrease and the ECM will interpret the lower voltage as a warm engine.

ENGINE LOAD — Tech 2 Range 0%-100% —
Engine load is calculated by the ECM from engine speed and MAF sensor readings. Engine load should increase with an increase in RPM or air flow.

TIME FROM START — Tech 2 Range 00:00:00-99:99:99 Hrs:Min:Sec —
Indicates the time elapsed since the engine was started. If the engine is stopped, engine run time will be reset to 00:00:00.

ENGINE SPEED — Range 0-9999 RPM —
Engine speed is computed by the ECM from the 58X reference input. It should remain close to desired idle under various engine loads with engine idling.

FUEL PUMP — Tech 2 Displays ON or OFF —
Indicates the ECM commanded state of the fuel pump relay driver circuit.

FUEL TRIM CELL — Tech 2 Range 0-21 —
The fuel trim cell is dependent upon engine speed and MAF sensor readings. A plot of RPM vs. MAF is divided into 22 cells. Fuel trim cell indicates which cell is currently active.

FUEL TRIM LEARN — Tech 2 Displays NO or YES —
When conditions are appropriate for enabling long term fuel trim corrections, fuel trim learn will display "YES." This indicates that the long term fuel trim is responding to the short term fuel trim. If the fuel trim learn displays "NO," then long term fuel trim will not respond to changes in short term fuel trim.

HO2S SEN.Tech 2 Range 0-1132 mV–
Represents the fuel control exhaust oxygen sensor output voltage. Should fluctuate constantly within a range between 10 mV (lean exhaust) and 1000 mV (rich exhaust) while operating in closed loop.

HO2S SEN.Tech 2 Displays READY YES/NO–
Indicates the status of the exhaust oxygen sensor. The Tech 2 will indicate that the exhaust oxygen sensor is ready when the ECM detects a fluctuating HO2S voltage sufficient to allow closed loop operation. This will not occur unless the exhaust oxygen sensor is warmed up.

IAC POSITION — Tech 2 Range 0-255 Counts —
Displays the commanded position of the idle air control pintle in counts. A larger number of counts means that more air is being commanded through the idle air passage. Idle air control should respond fairly quickly to changes in engine load to maintain desired idle RPM.

IAT (INTAKE AIR TEMPERATURE)— Tech 2 Range –40˚C to 151˚C (–40˚F to 304˚F) —
The ECM converts the resistance of the intake air temperature sensor to degrees. Intake air temperature (IAT) is used by the ECM to adjust fuel delivery and spark timing according to incoming air density.

IGNITION VOLTAGE — Tech 2 Range 0-25.5 Volts —
This represents the system voltage measured by the ECM at its ignition feed.

INJ. PULSE BANK 1 – Tech 2 Range 0-1000 msec. –
Indicates the amount of time the ECM is commanding each injector "ON" during each engine cycle. A longer injector pulse width will cause more fuel to be delivered. Injector pulse width should increase with increased engine load.

LONG TERM FUEL TRIM BANK 1
The long term fuel trim is derived from the short term fuel trim values and represents a long term correction of fuel delivery for the bank in question. A value of 0% indicates that fuel delivery requires no compensation to maintain the ECM commanded air/fuel ratio. A negative value significantly below 0% indicates that the fuel system is rich and fuel delivery is being reduced (decreased injector pulse width). A positive value significantly greater than 0% indicates that a lean condition exists and the ECM is compensating by adding fuel (increased injector pulse width). Because long term fuel trim tends to follow short term fuel trim, a value in the negative range due to canister purge at idle should not be considered unusual. Fuel trim values at maximum authority may indicate an excessively rich or lean system.

MAF — Tech 2 Range 0.0-512 g/s —
MAF (mass air flow) is the MAF input frequency converted to grams of air per second. This indicates the amount of air entering the engine.

MIL — Tech 2 Displays ON or OFF —
Indicates the ECM commanded state of the malfunction indicator lamp.

POWER ENRICHMENT — Tech 2 Displays ACTIVE or INACTIVE —
"ACTIVE" displayed indicates that the ECM has detected conditions appropriate to operate in power enrichment mode. The ECM will command power enrichment mode when a large increase in throttle position and load is detected. While in power enrichment mode, the ECM will increase the amount of fuel delivered by entering open loop and increasing the injector pulse width. This is done to prevent a possible sag or hesitation from occurring during acceleration.

SPARK — Tech 2 Range –64˚ to 64˚ —
Displays the amount of spark advance being commanded by the ECM on the IC circuit.

START-UP ECT — Tech 2 Range –40˚C to 151˚C (–40˚F to 304˚F) —
Indicates the engine coolant temperature at the time that the vehicle was started. Used by the HO2S diagnostic to determine if the last start-up was a cold start.

TP — Tech 2 Range 0%-100% —
TP (throttle position) angle is computed by the ECM from the TP sensor voltage. TP angle should display "0%" at idle and "100%" at wide open throttle.

TP SENSOR — Tech 2 Range 0.00-5.00 Volts —
The voltage being monitored by the ECM on the TP sensor signal circuit.

CATALYST PROTECTION MODE— Tech 2 Displays YES or NO —
"YES" displayed indicates that the ECM has detected conditions appropriate to operate in TWC protection mode. The ECM will decrease the air/fuel ratio to a value that depends on mass air flow (higher mass air flow = lower air/fuel ratio).

WEAK CYLINDER –Tech 2 Displays Cylinder Number—
This indicates that the ECM has detected crankshaft speed variations that indicate 2% or more cylinder firing events are misfires.

Typical Scan Data Values

Use the Typical Scan Data Values Table only after the On-Board Diagnostic System Check has been completed, no DTC(s) were noted, and you have determined that the on-board diagnostics are functioning properly. Tech 2 values from a properly-running engine may be used for comparison with the engine you are diagnosing. The typical scan data values represent values that would be seen on a normally-running engine.

NOTE: A Tech 2 that displays faulty data should not be used, and the problem should be reported to the Tech 2 manufacturer. Use of a faulty Tech 2 can result in misdiagnosis and unnecessary replacement of parts.

Only the parameters listed below are referred to in this service manual for use in diagnosis. For further information on using the Tech 2 to diagnose the ECM and related sensors, refer to the applicable reference section listed below. If all values are within the typical range described below, refer to the *Symptoms* section for diagnosis.

Test Conditions

Engine running, lower radiator hose hot, transmission in park or neutral, closed loop, accessaries off, brake not applied and air conditioning off.

3.2L V-6 Engine (Automatic and Manual Transmission)

Tech 2 Parameter	Data List	Units Displayed	Typical Data Values (IDLE)	Typical Data Values (2500 RPM)	Refer To
A/C Clutch	Engine	On/Off	Off	Off	General Description and Operation, A/C Clutch Circuit Operation
A/C Request	Engine	On/Off	Off	Off	General Description and Operation, A/C Request Signal
Air/Fuel Ratio	Engine	Ratio: _ to 1	14.7	14.7	General Description and Operation, Fuel System Metering Purpose
Barometric Pressure	Engine	kpa	Depend barometric pressure	Depend barometric pressure	—
Catalyst Protection Mode	Engine	Yes/No	—	—	—
Check Trans Lamp (Auto Trans)	Engine	On/Off	Off	Off	Automatic Transmission Diagnosis
CMP Act. Counter (Cam Position Activity)	Engine	Counts	0-255, always increasing	0-255, always increasing	DTC P0341 and P0342
Deceleration Fuel Mode	Engine	On/Off	Off	Off	General Description and Operation, Deceleration Mode
Desired Idle	Engine	RPM	760	2500	General Description and Operation, Idle Air Control (IAC) Valve
ECT (Engine Coolant Temp)	Engine	Degrees C, Degrees F	80-100˚C (176-212˚F)	80-100˚C (176-212˚F)	General Description and Operation, Engine Coolant Temperature (ECT) Sensor
Engine Load	Engine	Percent	2.0% - 5.5%	9.0% - 20.0%	General Description and Operation, Mass Air Flow (MAF) Sensor
Time From Start	Engine	Sec	Varies. Resets at each engine start.	Varies. Resets at each engine start.	—
Engine Speed	Engine	RPM	Within –50 to +100 of “Desired Idle”	Actual engine speed	DTCs: P1508, P1509
Fuel Pump	Engine	On/Off	On	On	Engine Fuel
Fuel Trim Cell	Engine	Cell number	49, 50, 51	21, 22, 23	Diagnosis, Fuel Trim Cell Diagnostic Weights
Fuel Trim Leaned	Engine	Yes/No	No	Yes	Diagnosis, Fuel Trim Monitor
HO2S Sen. (millivolts)	Engine	Millivolts	50-950 changing slowly	50-950 changing slowly	General Description and Operation
HO2S (ready/not ready)	Engine	Ready Yes/No	Ready Yes	Ready Yes	General Description and Operation, Fuel Control HO2S; DTC: P0135
IAC Position	Engine	Steps	5-50	10-70	—

Tech 2 Parameter	Data List	Units Displayed	Typical Data Values (IDLE)	Typical Data Values (2500 RPM)	Refer To
IAT (Intake Air Temp)	Engine	Degrees C, Degrees F	0-100˚C, depends on underhood	0-80˚C, depends on underhood	General Description and Operation, Intake Air Temperature (IAT) Sensor
Ignition Voltage	Engine	Volts	12.8-14.5	12.8-14.5	General Description and Operation, Electronic Ignition System
Inj. Pulse Bank 1	Engine	Milliseconds	2.0-4.0	2.5-4.5	General Description, Fuel Metering, Fuel Injector
Long Term FT Bank 1 (Long Term Fuel Trim)	Engine	Counts and Percent	counts, –12% to +17%	counts, –10% to +15%	Diagnosis, Fuel Trim System Monitor; DTCs: P0171, P0172
MAF (Mass Air Flow)	Engine	Grams per second	2.85-6.65	9.5-16.5	General Description and Operation, MAF; DTCs: P101, P0102, P0103
MIL (Malfunction Indicator Light)	Engine	On/Off	Off	Off	On-Board Diagnostic System Check
EVAP Purge Solenoid	Engine	%	—	—	—
PSP Switch (Power Steering Pressure)	Engine	Normal/High Pressure	Normal	Normal	Power Steering Gear and Pump, General Description, pressure Switch
Power Enrichment	Engine	Yes/No	No	No	General Description and Operation, Acceleration Mode
B1S1 (Short Term)	Engine	Rich/Lean	Always changing	Always changing	General Description and Operation, Fuel Control HO2S
Shrt Term FT Bank 1 (Short Term Fuel Trim)	Engine	Counts and Percent	112 to 154 counts, –12% to +20%	112 to 154 counts, –12% to +20%	Diagnosis, Fuel Trim System Monitor; DTCs: P0171, P0172
Spark (Advance)	Engine	Degrees Before Top Dead Center	10-15˚CA	34-44˚CA	General Description and Operation, Electronic Ignition System
Start-Up ECT (Engine Coolant Temp)	Engine	Degrees C, Degrees F	Depends on engine coolant temperature at time of start-up	Depends on engine coolant temperature at time of start-up	General Description and Operation, Engine Coolant Temperature (ECT) Sensor
TCC Engaged (Torque Converter Clutch)	Engine	No/Yes	No	No	Transmission Diagnosis
Torque Management	Engine	Inactive/Active	Inactive	Inactive	Transmission Diagnosis
TP (Throttle Position)	Engine	Percent	0	5-10	General Description and Operation, Throttle Position (TP) Sensor; DTCs: P0121, P0122,P0123

Tech 2 Parameter	Data List	Units Displayed	Typical Data Values (IDLE)	Typical Data Values (2500 RPM)	Refer To
TP Sensor (Throttle Position)	Engine	Volts	0.4-0.7	0.60-1.00	General Description and Operation, Throttle Position (TP) Sensor; DTCs: P0121, P0122,P0123
Vehicle Speed	Engine	MPH / km/h	0	0	Transmission Diagnosis
Fuel System Status	Engine	Open / Close loop	Close loop	Close loop	General Description

No Malfunction Indicator Lamp (MIL)

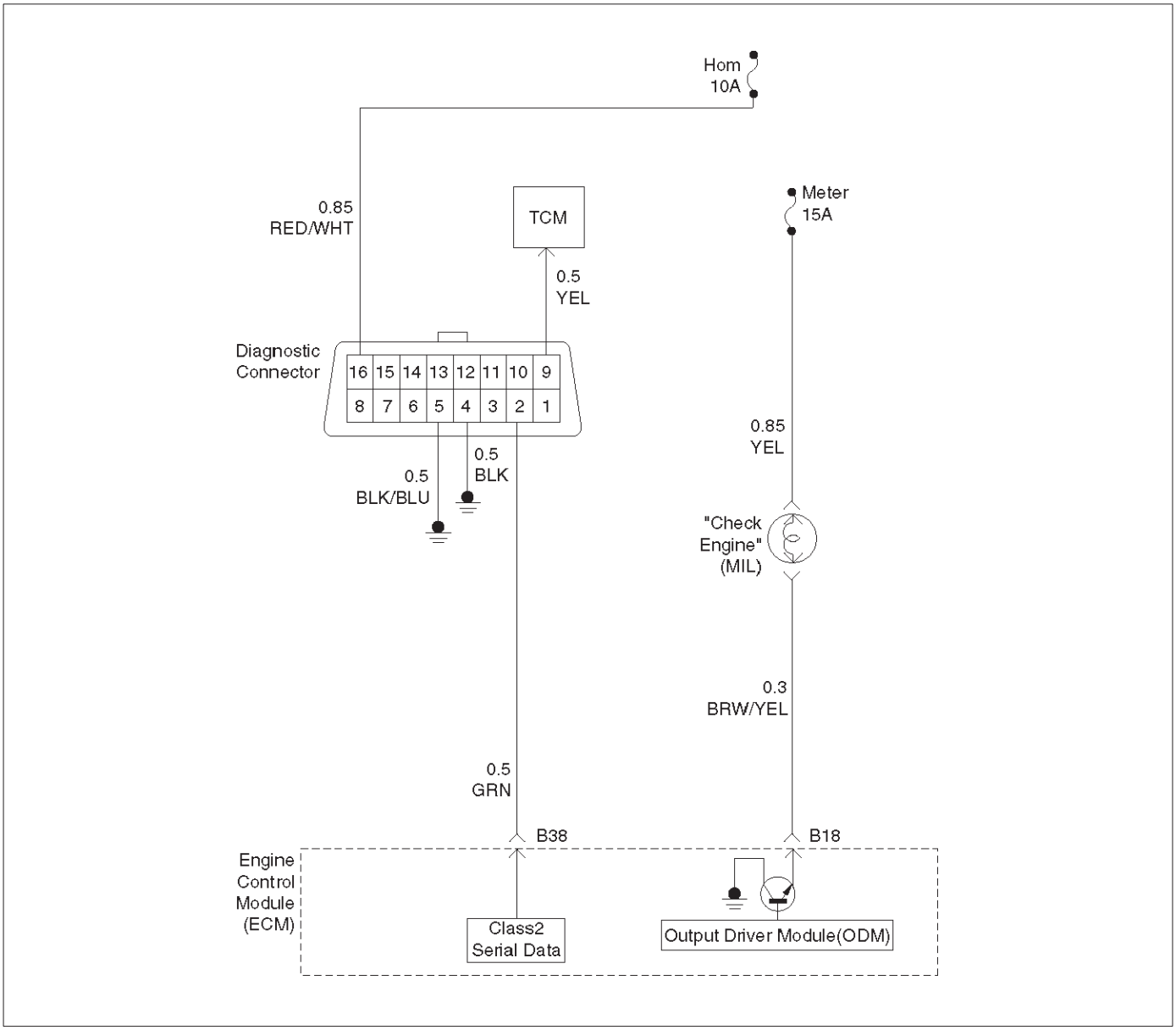

060RW045

Circuit Description

The “Check Engine” lamp (MIL) should always be illuminated and steady with the ignition “ON” and the engine stopped. Ignition feed voltage is supplied to the MIL bulb through the meter fuse. The Engine Control Module ECM turns the MIL “ON” by grounding the MIL driver circuit.

Diagnostic Aids

An intermittent MIL may be cased by a poor connection, rubbed-through wire insulation, or a wire broken inside the insulation. Check for the following items:

- Inspect the ECM harness and connections for improper mating, broken locks, improperly formed or damaged terminals, poor terminal-to-wire connection, and damaged harness.
- If the engine runs OK, check for a faulty light bulb, an open in the MIL driver circuit, or an open in the instrument cluster ignition feed.
- If the engine cranks but will not run, check for an open ECM ignition or battery feed, or a poor ECM to engine ground.

Test Description

Number(s) below refer to the step number(s) on the Diagnostic Chart.

2. A “No MIL” condition accompanied by a no-start condition suggests a faulty ECM ignition feed or battery feed circuit.

9. Using a test light connected to B+, probe each of the ECM ground terminals to ensure that a good ground is present. Refer to *ECM Terminal End View* for terminal locations of the ECM ground circuits.

12. In this step, temporarily substitute a known good relay for the ECM relay. The horn relay is nearby, and it can be verified as “good” simply by honking the horn. Replace the horn relay after completing this step.

No Malfunction Indicator Lamp (MIL)

Step	Action	Value(s)	Yes	No
1	Was the “On-Board Diagnostic (OBD) System Check” performed?	—	Go to *Step 2*	Go to *OBD System Check*
2	Attempt to start the engine. Does the engine start?	—	Go to *Step 3*	Go to *Step 6*
3	Check the meter fuse for the instrument cluster ignition feed circuit. Is the fuse OK?	—	Go to *Step 4*	Go to *Step 16*
4	Ignition “ON,” probe the ignition feed circuit at the cluster connector with a test light to ground. Is the test light “ON?”	—	Go to *Step 5*	Go to *Step 13*
5	1. Ignition “OFF.” 2. Disconnect the ECM. 3. Jumper the MIL driver circuit at the ECM connector to ground. 4. Ignition “ON.” Is the MIL “ON?”	—	Go to *Step 10*	Go to *Step 11*
6	Check the ECM ignition feed and battery feed fuses (15 A engine fuse and 15 A ECM fuse). Are both fuses OK?	—	Go to *Step 7*	Go to *Step 15*
7	1. Ignition “OFF.” 2. Disconnect the ECM. 3. Ignition “ON.” 4. Probe the ignition feed circuit at the ECM harness connector with a test light to ground. Is the test light “ON?”	—	Go to *Step 8*	Go to *Step 12*
8	Probe the battery feed circuit at the ECM harness connector with a test light to ground. Is the test light “ON?”	—	Go to *Step 9*	Go to *Step 14*
9	Check for a faulty ECM ground connection. Was a problem found?	—	Verify repair	Go to *Step 10*
10	Check for damaged terminals at the ECM. Was a problem found?	—	Verify repair	Go to *Step 17*
11	Check for an open MIL driver circuit between the ECM and the MIL. Was a problem found?	—	Verify repair	Go to *Step 18*
12	Substitute a known “good” relay for the ECM main relay. Was the malfunction fixed?	—	Verify repair	Go to *Step 13*
13	Repair the open in the ignition feed circuit. Is the action complete?	—	Verify repair	—
14	Locate and repair the open ECM battery feed circuit. Is the action complete?	—	Verify repair	—

No Malfunction Indicator Lamp (MIL) (Cont'd)

Step	Action	Value(s)	Yes	No
15	Locate and repair the short to ground in the ECM ignition feed circuit or ECM battery feed circuit. Is the action complete?	—	Verify repair	—
16	Locate and repair the short to ground in the ignition feed circuit to the instrument cluster, and replace the fuse. Is the action complete?	—	Verify repair	—
17	Replace the ECM. Is the action complete?	—	Verify repair	—
18	Check the MIL driver circuit for a poor connection at the instrument panel connector. Was a problem found?	—	Verify repair	Go to *Instrument Panel* in *Electrical Diagnosis*

Malfunction Indicator Lamp (MIL) “ON” Steady

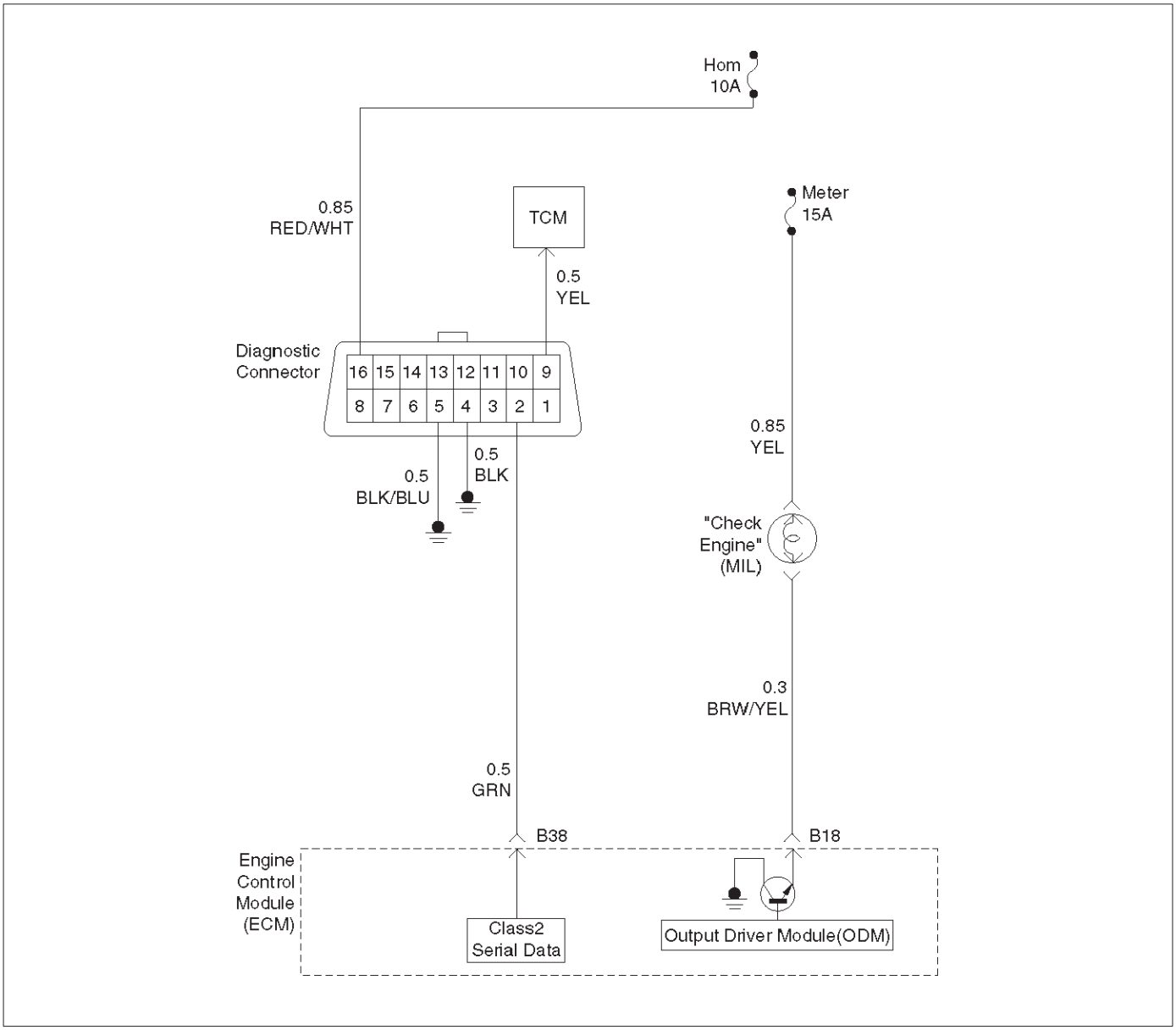

060RW045

Circuit description

The “Check Engine” lamp (MIL) should always be illuminated and steady with ignition “ON” and the engine stopped. Ignition feed voltage is supplied directly to the MIL indicator. The Engine Control Module ECM turns the MIL “ON” by grounding the MII driver circuit.
The MIL should not remain “ON” with the engine running and no DTC(s) set. A steady MII with the engine running and no DTC(s) suggests a short to ground in the MII driver circuit.

Diagnostic Aids

An intermittent may be caused by a poor connection, rubbed–through wire insulation, or a wire broken inside the insulation. Check for the following items:

- Poor connection or damaged harness – Inspect the ECM harness and connectors for improper mating, broken locks, improperly formed or damaged terminals, poor terminal-to-wire connection, and damaged harness.

Test Description

Number(s) below refer to the step number(s) on the Diagnostic Chart.

2. If the MIL does not remain “ON” when the ECM is disconnected, the MIL driver wiring is not faulty.
3. If the MIL driver circuit is OK, the instrument panel cluster is faulty.
6. This vehicle is equipped with a ECM which utilizes an electrically erasable programmable read only memory (EEPROM).

Malfunction Indicator Lamp (MIL) “ON” Steady

Step	Action	Value(s)	Yes	No
1	Was the “On-Board diagnostic (OBD) System Check” performed?	—	Go to *Step 2*	Go to *OBD System Check*
2	1. Ignition “OFF,” disconnect ECM. 2. Ignition “ON,” observe the MIL (Service Engine Soon lamp). Is the MIL “ON?”	—	Go to *Step 3*	Go to *Step 5*
3	1. Ignition “OFF,” disconnect the instrument panel cluster. 2. Check the MIL driver circuit between the ECM and the instrument panel cluster for a short to ground. 3. If a problem is found, repair as necessary. Was the MIL driver circuit shorted to ground?	—	Go to *OBD System Check*	Go to *Step 4*
4	Replace the instrument panel cluster. Is the action complete?	—	Go to *OBD System Check*	—
5	1. Ignition “OFF,” reconnect the ECM. 2. Ignition “ON,” reprogram the ECM. Refer to *On-Vehicle Service* in *Engine Control Module and Sensor* for procedures. 3. Using the Tech 2 output controls function, select MIL dash lamp control and command the MIL “OFF.” Did the MIL turn “OFF?”	—	Go to *OBD System Check*	Go to *Step 6*
6	Replace the ECM. Is the action complete?	—	Go to *OBD System Check*	—

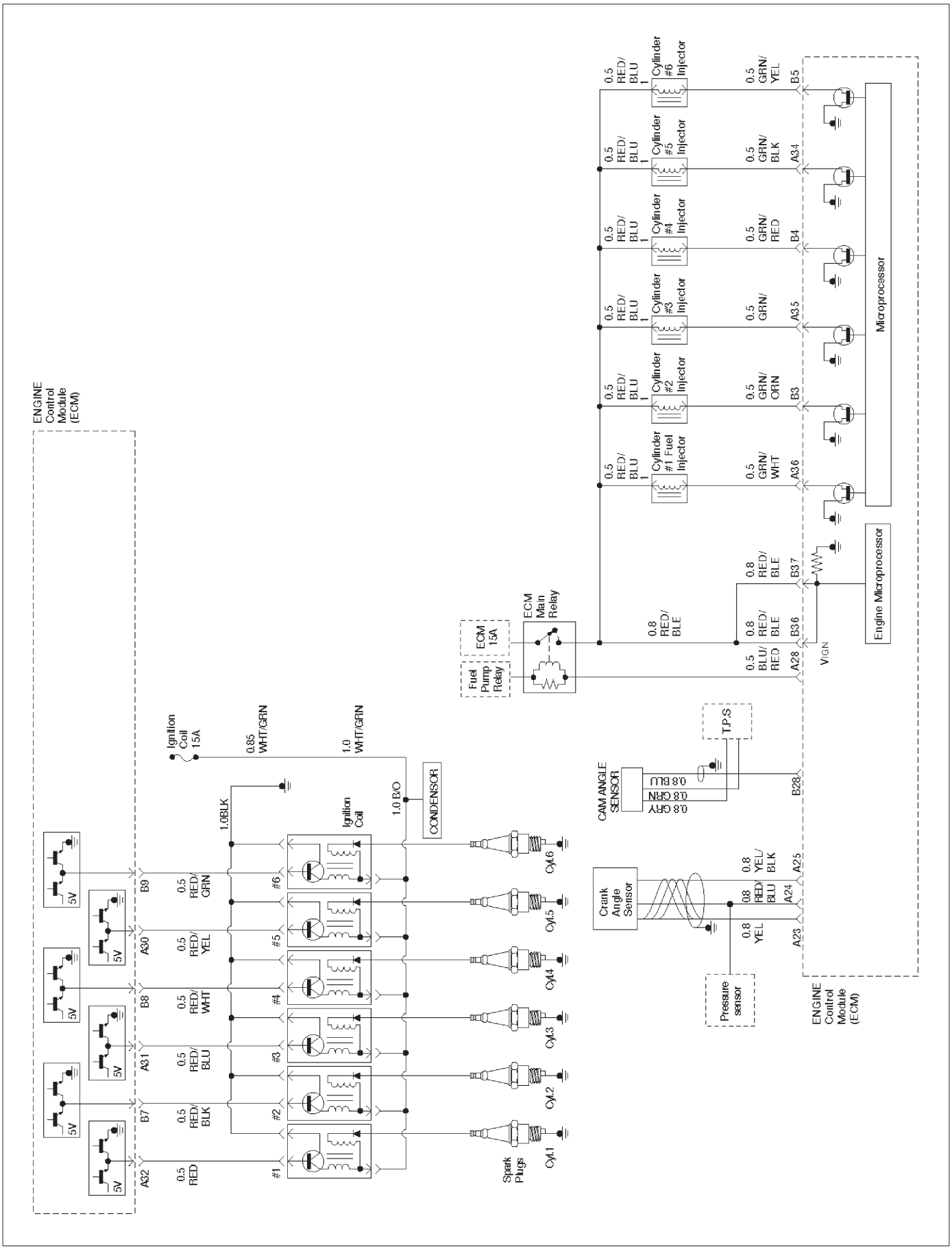
ENGINE Control Module (ECM)
5V
A32
B7
A31
B8
A30
B9
0.5 RED
0.5 RED/ BLK
0.5 RED/ BLU
0.5 RED/ WHT
0.5 RED/ YEL
0.5 RED/ GRN
#1
#2
#3
#4
#5
#6
1.0BLK
Ignition Coil
1.0 B/O
CONDENSOR
Ignition Coil 15A
0.85 WHT/GRN
1.0 WHT/GRN
Spark Plugs
Cyl.1
Cyl.2
Cyl.3
Cyl.4
Cyl.5
Cyl.6
Crank Angle Sensor
0.8 YEL
0.8 RED/ BLU
0.8 YEL/ BLK
A23
A24
A25
Pressure sensor
CAM ANGLE SENSOR
0.8 GRY
0.8 GRN
0.8 BLU
T.P.S
B28
ECM 15A
Fuel Pump Relay
ECM Main Relay
0.5 BLU/ RED
A28
0.8 RED/ BLE
B36
B37
VIGN
Engine Microprocessor
0.5 GRN/ WHT
A36
0.5 GRN/ ORN
B3
0.5 GRN/
A35
0.5 GRN/ RED
B4
0.5 GRN/ BLK
A34
0.5 GRN/ YEL
B5
Cylinder #1 Fuel Injector
Cylinder #2 Injector
Cylinder #3 Injector
Cylinder #4 Injector
Cylinder #5 Injector
Cylinder #6 Injector
Microprocessor
ENGINE Control Module (ECM)

060RW051

Engine Cranks But Will Not Run

Circuit Description

The electronic Ignition system uses a coil-at-plug method of spark distribution. In this type of ignition system, the Engine Control Module ECM triggers the correct driver inside the ignition coil, which then triggers the correct ignition coil based on the 58X signal received from the crankshaft position sensor (CKP). The spark plug connected to the coil fires when the ignition coil opens the ground circuit for the coil's primary circuit.

During crank, the ECM monitors the CKP 58X signal. The CKP signal is used to determine which cylinder will fire first. After the CKP 58X signal has been processed by the ECM, it will command all six injectors to allow a priming shot of fuel for all the cylinders. After the priming, the injectors are left "OFF" during the next six 58X reference pulses from the CKP. This allows each cylinder a chance to use the fuel from the priming shot. During this waiting period, a camshaft position (CMP) signal pulse will have been received by the ECM. The CMP signal allows the ECM to operate the injectors sequentially based on camshaft position. If the camshaft position signal is not present at start-up, the ECM will begin sequential fuel delivery with a 1-in-6 chance that fuel delivery is correct. The engine will run without a CMP signal, but will set a DTC code.

Diagnostic Aids

An intermittent problem may be caused by a poor connection, rubbed-through wire insulation or a wire broken inside the insulation. Check for the following items:

- Poor connection or damaged harness – Inspect the ECM harness and connectors for improper mating, broken locks, improperly formed or damaged terminals, poor terminal-to-wore connection, and damaged harness.
- Faulty engine coolant temperature sensor – Using a Tech 2, compare engine coolant temperature with intake air temperature on a completely cool engine. Engine coolant temperature should be within 10˚C of intake air temperature. If not, replace the ECT sensor.

Test Description

Number(s) below refer to the step number(s) on the Diagnostic Chart.

5. An obvious cause of low fuel pressure would be an empty fuel tank.
6. The engine will easily start and run if a few injectors are disabled. It is not necessary to test all injectors at this time since this step is only a test to verify that all of the injectors have not been disabled by fuel contamination.
7. A blinking test light verifies that the ECM is monitoring the crankshaft reference signal and is capable of activating the injectors. If there is an open or shorted driver circuit, DTCs 201–206 should be set.

19. By using a spark tester, each ignition coil's ability to produce 25,000 volts is verified.

25. If there is an open or shorted driver circuit, DTCs 201-206 should be set. All six injector driver circuits can be checked at one time without removing the intake manifold if a 5–8840–2639–0 test light is available. This is the alternative procedure:
    - With the ignition "OFF," disconnect the gray connector located at the rear of the air filter, attached to a bracket on the purge canister.
    - Connect test light 5–8840–2639–0 to the connector. Do any of the light constantly illuminate or fail to blink when the engine is cranked? If so, repair the short or open circuit, or replace the ECM if indicated.

This procedure only tests the driver circuit as far as the test connection, so step 31 is added to test the circuit all the way to the injector.

Engine Cranks But Will Not Run

Step	Action	Value(s)	Yes	No
1	Was the "On-Board Diagnostic (OBD) System Check" performed?	—	Go to *Step 2*	Go to *OBD System Check*
2	Check the 15 A ignition coil fuse, the 15 A engine device fuse, and the 15A ECM fuse. Was a fuse blown?	—	Go to *Step 3*	Go to *Step 4*
3	Check for a short to ground and replace the fuse. Is the action complete?	—	Verify repair	—

Engine Cranks But Will Not Run (Cont'd)

Step	Action	Value(s)	Yes	No
4	1. Ignition "OFF," install a fuel pressure gauge at the test fitting on the fuel supply line in the engine compartment. (Use a shop cloth to absorb any fuel leakage while making the connection.) 2. Ignition "ON," observe the fuel pressure. Is the fuel pressure within the specified values, and does it hold steady?	285-375 kpa (43-55 psi)	Go to *Step 6*	Go to *Step 5*
5	Is any fuel pressure indicated?	—	Go to *Fuel System Electrical Test*	Go to *Fuel System Diagnosis*
6	Install the switch box 5–8840–2618–0 at the injector test connector and activate an injector. Did the fuel pressure drop when the injector was activated?	—	Go to *Step 7*	Go to *Step 18*
7	Install an injector test light at the #2 cylinder injector harness connector. Does the light blink when the engine is cranked?	—	Go to *Step 8*	Go to *Step 24*
8	1. Ignition "OFF." 2. Disconnect the 6-pin connector at the ignition coil. 3. With a test light to B+, probe each of the 6 exposed ignition module pins, one at a time, while the engine is cranked. (Use the gray narrow METRA–PAK© flexible female connector from the 5-8840-0385-0 kit to make the pin accessible.) Does the light flash at each pin when the engine is cranked?	—	Go to *Step 12*	Go to *Step 9*
9	1. Remove the 5-pin connector at the ignition coil. 2. Ignition "ON." 3. Use a test light at the harness connector to verify that the module is being supplied with B+ and ground. Was a problem found?	—	Go to *Step 10*	Go to *Step 11*
10	Repair the open ignition feed circuit or ground circuit to the ignition coil. Is the action complete?	—	Verify repair	—
11	Repair the ignition module. Is the action complete?	—	Verify repair	—
12	1. Reconnect the ignition coil connector. 2. Remove the electrical connector from each coil. 3. With a test light to B+, probe each of the coil connectors at the wire which runs to the ignition module. (Wire color will match the wire color at the ignition module 6-pin connector – green, or green with a tracer.) Does the light flash at each coil connector when the engine is cranked?	—	Go to *Step 14*	Go to *Step 13*
13	Check for an open circuit between the ignition coil. Is the action complete?	—	Verify repair	—

Engine Cranks But Will Not Run (Cont'd)

Step	Action	Value(s)	Yes	No
14	1. Ignition "ON." 2. While the coil connectors are disconnected, touch each coil connector's ignition feed terminal with a grounded test light (the ignition feed wire is black with orange tracer). Did the test light illuminate?	—	Go to *Step 16*	Go to *Step 15*
15	Repair the open ignition feed circuit. Is the action complete?	—	Verify repair	—
16	While the coil connectors are disconnected, touch each connector's secondary ground terminal with a test light to B+. (The ground wires are black.) Did the test light illuminate at each coil connector?	—	Go to *Step 18*	Go to *Step 17*
17	Repair the open secondary ground circuit. Is the action complete?	—	Verify repair	—
18	1. Test the fuel for contamination. 2. If a problem is found, clean the fuel system and correct the contaminated fuel condition as necessary. Replace the fuel filter and replace any injectors that are not delivering fuel (see Injector Balance Test). Was a problem found?	—	Verify repair	Go to *Step 19*
19	1. Remove any ignition coil and install a spark tester at the spark plug end of the coil. 2. Observe the tester while the engine is cranking. Was a crisp, blue spark observed? Only one or two sparks followed by no result is considered the same as "No Spark."	—	Go to *Step 21*	Go to *Step 20*
20	Replace the ignition coil, and return to Step 19 to test the remaining coils. Is the action complete?	—	Verify repair	—
21	Repeat Step 19 for each coil. Remove only one coil at a time, and reinstall each coil on its spark plug after testing, but do not refasten coils with screws at this time. After all coils have passed the spark test, does the engine start?	—	Refasten all coils with their screws	Go to *Step 22*
22	1. Remove the spark plugs from all cylinders. 2. Visually inspect the spark plug electrodes. 3. Replace any spark plugs with loose or missing electrodes or cracked insulators. Did your inspection reveal any spark plugs exhibiting excessive fouling?	—	Correct the fouling condition	Go to *Step 23*

Engine Cranks But Will Not Run (Cont'd)

Step	Action	Value(s)	Yes	No
23	Refer to *Engine Mechanical Diagnosis* to diagnose the following conditions: ● Faulty or incorrect camshaft drive belts ● Leaking or sticky valves or rings ● Excessive valve deposits ● Loose or worn rocker arms ● Weak valve springs ● Incorrect valve timing ● Leaking head gasket Is the action complete?	—	Verify repair	Go to *Step 25*
24	Observe the "Engine Speed" data display on the Tech 2 while cranking the engine. Is the engine RPM indicated? (If the Tech 2 is normally powered from the cigarette lighter socket, and if the Tech 2 display goes blank while cranking the engine, it will be necessary to power the Tech 2 directly from the vehicle battery.)	—	Go to *Step 25*	Go to *Step 34*
25	1. Disconnect the 7-pin gray connector at the rear of the air filter beneath the point where the air duct attaches to the MAF sensor. 2. Ignition "ON." 3. Using a test light connected to ground, probe the ignition terminal at the ECM (female) side of the 7-pin connector. Is the test light "ON?"	—	Go to *Step 26*	Go to *Step 32*
26	1. At the ECM (female) side of the connector mentioned in step 25, connect a test light between the ignition + terminal and one of the injector driver circuits at the same connector. 2. Ignition "ON." 3. Observe the test light, and repeat the test for each injector driver circuit. Did the test light stay on when checking any of the 6 injector driver circuits?	—	Go to *Step 27*	Go to *Step 29*
27	1. Ignition "OFF," disconnect the ECM. 2. Ignition "ON," observe the test light. Is the test light "ON?"	—	Go to *Step 28*	Go to *Step 33*
28	Locate and repair the short to ground in the injector driver circuit. Is the action complete?	—	Verify repair	—
29	1. Using the same test location as in step 26, connect a test light between the ignition terminal and one of the driver circuits. 2. Crank the engine and observe the test light. 3. Repeat for each injector driver circuit. Did the light blink during the test for each circuit?	—	Go to *Step 31*	Go to *Step 30*
30	Check for an open injector driver circuit. Was a problem found?	—	Verify repair	Go to *Step 33*

Engine Cranks But Will Not Run (Cont'd)

Step	Action	Value(s)	Yes	No
31	1. At the injector (male) side of the gray connector mentioned in step 25, connect an ohmmeter between the ignition pin and one of the driver circuit pins. 2. Check for continuity in the circuit. 3. Repeat for each injector circuit. The readings should be approximately equal to the specified value for injector resistance. Was a problem found?	12.5 ohms	Verify repair	Go to *Step 8*
32	Repair the ignition feed circuit. Is the action complete?	—	Verify repair	—
33	Replace the ECM. Is the action complete?	—	Verify repair	—
34	1. Raise the vehicle and disconnect the CKP sensor harness. 2. Ignition "ON." 3. With a test light to ground, probe the harness ignition feed terminal. Did the light illuminate?	—	Go to *Step 36*	Go to *Step 35*
35	Check the ignition feed wire between the sensor and the ECM for a short to ground or open circuit. Is the action complete?	—	Verify repair	—
36	1. Ignition "ON." 2. At the CKP harness connector, connect a test light between the ignition and ground terminals. Did the light illuminate?	—	Go to *Step 38*	Go to *Step 37*
37	Check the sensor ground circuit for an open or short to voltage. Is the action complete?	—	Verify repair	—
38	Check the signal circuit between the sensor and the ECM for a short to ground, short to voltage, or an open. Was a problem found?	—	Verify repair	Go to *Step 39*
39	Replace the CKP position sensor. Is the action complete?	—	Verify repair	Go to *Step 33*

Fuel System Electrical Test

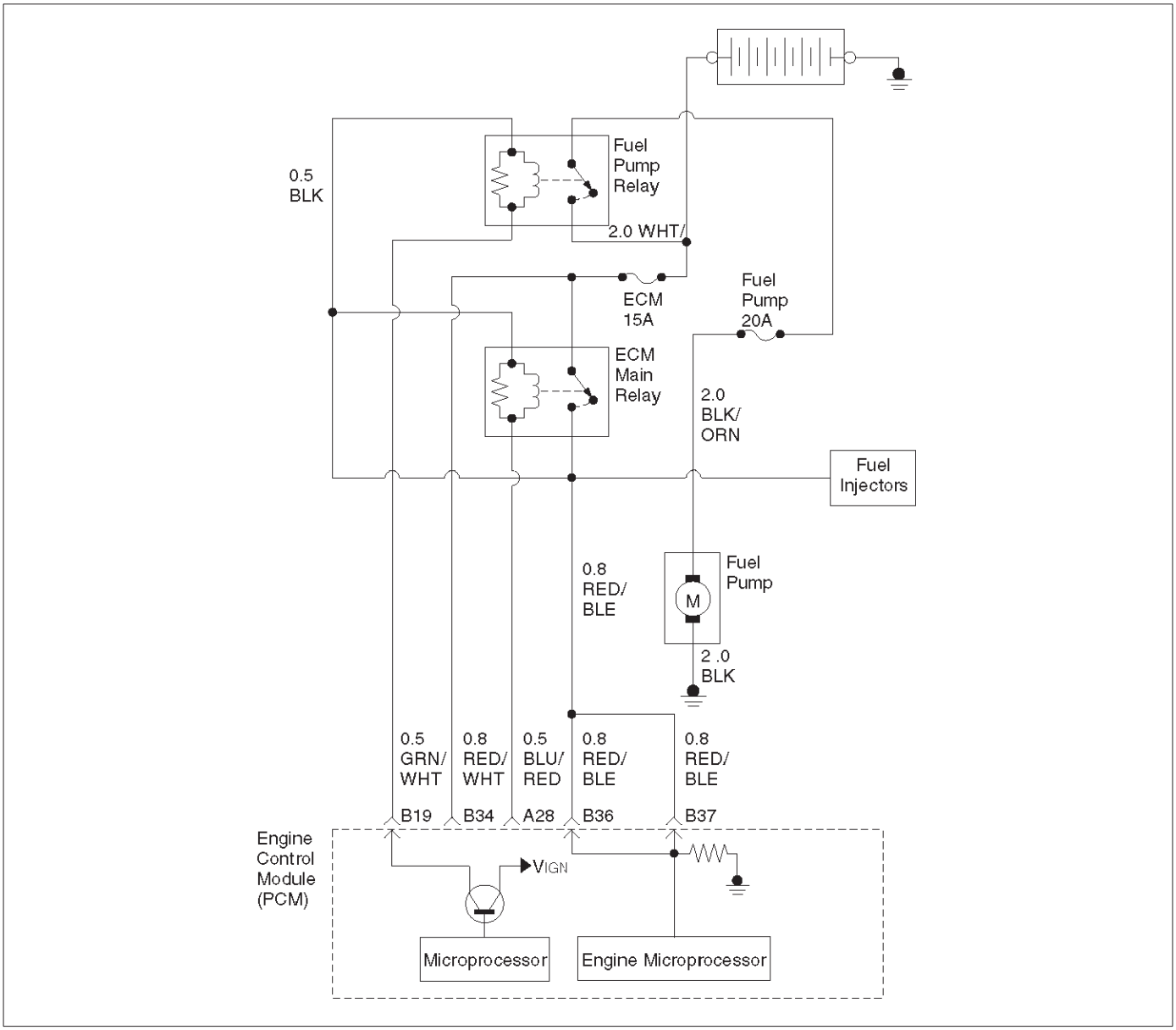

060RW058

Circuit Description

When the ignition switch is first turned “ON,” the Engine Control Module ECM energizes the fuel pump relay which applies power to the in-tank fuel pump. The fuel pump relay will remain “ON” as long as the engine is running or cranking and the ECM is receiving 58X crankshaft position pulses. If no 58X crankshaft position pulses are present, the ECM de-energizes the fuel pump relay within 2 seconds after the ignition is turned “ON” or the engine is stopped.

The fuel pump delivers fuel to the fuel rail and injectors, then to the fuel pressure regulator. The fuel pressure regulator controls fuel pressure by allowing excess fuel to be returned to the fuel tank. With the engine stopped and ignition “ON,” the fuel pump can be turned “ON” by using a command by the Tech 2.

Diagnostic Aids

An intermittent may be caused by a poor connection, rubbed-through wire insulation, or a wire broken inside the insulation. Check for the following items:

- Poor connection or damaged harness – Inspect the ECM harness and connectors for improper mating, broken locks, improperly formed or damaged terminals, poor terminal-to-wire connection, and damaged harness.

Test Description

Number(s) below refer to the step number(s) on the Diagnostic Chart.

2. If the fuel pump is operating but incorrect pressure is noted, the fuel pump wiring is OK and the “Fuel System Pressure Test” chart should be used for diagnosis.

CAUTION: To reduce the risk of fire and personal injury:

- **It is necessary to relieve fuel system pressure before connecting a fuel pressure gauge. Refer to Fuel Pressure Relief Procedure, below.**
- **A small amount of fuel may be released when disconnecting the fuel lines. Cover fuel line fittings with a shop towel before disconnecting, to catch any fuel that may leak out. Place the towel in an approved container when the disconnect is completed.**

Fuel Pressure Relief Procedure

1. Remove the fuel cap.
2. Remove the fuel pump relay from the underhood relay center.
3. Start the engine and allow it to stall.
4. Crank the engine for an additional 3 seconds.

Fuel Gauge Installation

1. Remove the shoulder fitting cap.
2. Install fuel gauge 5-8840-0378-0 to the fuel feed line located in front of and above the right side valve cover.
3. Reinstall the fuel pump relay.

Fuel System Electrical Test

Step	Action	Value(s)	Yes	No
1	Was the “On-Board Diagnostic (OBD) System Check” performed?	—	Go to *Step 2*	Go to *OBD System Check*
2	1. Read the “Caution” above. 2. Relieve the fuel system pressure and install the fuel pump pressure gauge to the test fitting. 3. Use a Tech 2 to command the fuel pump “ON.” Is there an immediate pressure build-up which indicates the pump is running?	—	Go to *Step 3*	Go to *Step 4*
3	1. Verify that the pump is not running by removing the fuel filler cap and listening. 2. Command the pump “ON” with the Tech 2. Did the pump turn “OFF” after 2 seconds?	—	Test completed	Go to *Step 12*
4	1. Ignition “OFF.” 2. Remove the fuel pump relay. 3. Using a test light connected to ground, probe the battery feed to the relay. Did the light illuminate?	—	Go to *Step 6*	Go to *Step 5*
5	Repair short or open battery feed to fuel pump relay. Is the action complete?	—	Verify repair	—
6	1. Connect a test light between the two wires that connect to the fuel pump relay pull-in coil. 2. Ignition “ON.” Did the test light illuminate for 2 seconds and then turn off?	—	Go to *Step 12*	Go to *Step 7*
7	1. With a test light connected to battery (–), probe the fuel pump relay connector at the wire which runs from the relay pull–in coil to the ECM. 2. Ignition “ON.” Did the test light illuminate for 2 seconds and then turn off?	—	Go to *Step 8*	Go to *Step 9*
8	Locate and repair open in the fuel pump relay ground circuit. Is the action complete?	—	Verify repair	—

Fuel System Electrical Test (Cont'd)

Step	Action	Value(s)	Yes	No
9	Check for short or open between the ECM and the fuel pump relay. Was a problem found?	—	Verify repair	Go to *Step 10*
10	1. Check the fuel pump relay circuit for a poor terminal connection at the ECM. 2. If a problem is found, replace terminal as necessary. Was a problem found?	—	Verify repair	Go to *Step 11*
11	Replace the ECM. Is the action complete?	—	Verify repair	—
12	1. Reconnect the fuel pump relay. 2. Disconnect the fuel pump electrical connector at the fuel tank. 3. Using a test light connected to ground, probe the fuel pump feed wire (harness side). 4. Command the fuel pump "ON" with a Tech 2. Did the light illuminate for 2 seconds?	—	Go to *Step 15*	Go to *Step 13*
13	1. Substitute a known good realy for the fuel pump realy. 2. Leave the test light connected as in step 12. 3. Command the fuel pump "ON" with the Tech 2. 4. After this test, re-connect the known good relay in its proper location. Did the test light illuminate for 2 seconds when the fuel pump was commanded "ON?"	—	Go to *Step 17*	Go to *Step 14*
14	Check for a short circuit, blown fuse or open circuit between the relay and the fuel tank. Is the action complete?	—	Verify repair	—
15	1. With the fuel pump electrical connector at the fuel tank disconnected, connect a test light between the feed wire and the ground wire (harness side). 2. Command the fuel pump "ON" with a Tech 2. Did the test light illuminate for 2 seconds?	—	Go to *Step 18*	Go to *Step 16*
16	Repair the open circuit in the fuel pump ground wire. Is the action complete?	—	Verify repair	—
17	Replace the fuel pump relay. Is the action complete?	—	Verify repair	—
18	Replace the fuel pump. Is the action complete?	—	Verify repair	—

Fuel System Diagnosis

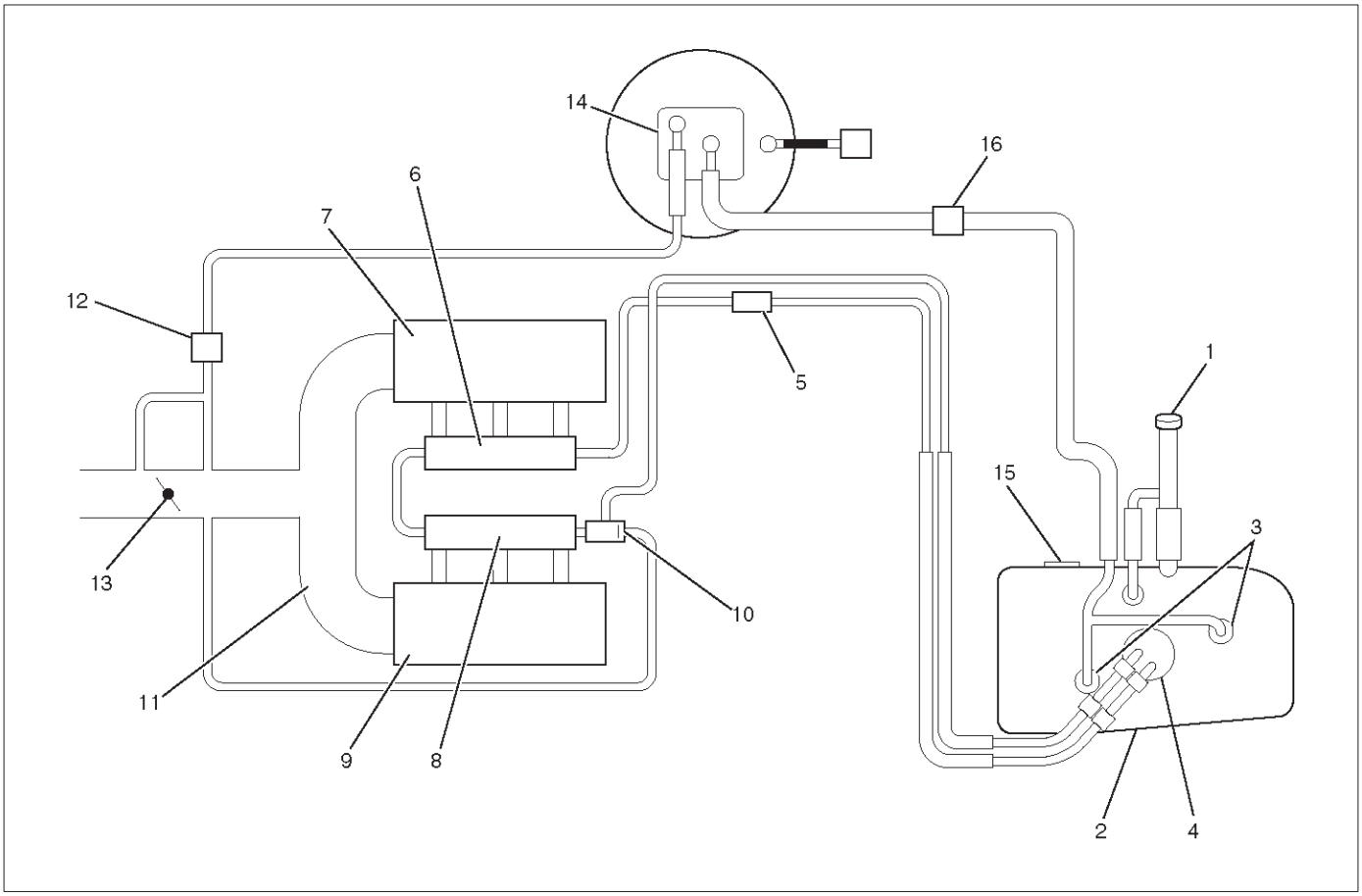

060RW245

Legend

(1) Fuel Filler Cap
(2) Fuel Tank
(3) Rollover Valve
(4) Fuel Pump Assembly
(5) Fuel Filter
(6) Fuel Rail Right
(7) Intake Air Port Right Bank
(8) Fuel Rail Left
(9) Intake Air Port Left Bank
(10) Fuel Pressure Control Valve
(11) Common Chamber
(12) Duty Solenoid Valve
(13) Throttle Valve
(14) Canister
(15) Fuel Gauge
(16) Check Valve

Circuit Description

When the ignition switch is turned "ON," the Engine Control Module ECM will turn "ON" the in-tank fuel pump. The in-tank fuel pump will remain "ON" as long as the engine is cranking or running and the ECM is receiving 58X crankshaft position pulses. If there are no 58X crankshaft position pulses, the ECM will turn the in-tank fuel pump "OFF" 2 seconds after the ignition switch is turned "ON" or 2 seconds after the engine stops running. The in-tank fuel pump is an electric pump within an integral reservoir. The in-tank fuel pump supplies fuel through an in-line fuel filter to the fuel rail assembly. The fuel pump is designed to provide fuel at a pressure above the pressure needed by the fuel injectors. A fuel pressure regulator, attached to the fuel rail, keeps the fuel available to the fuel injectors at a regulated pressure. Unused fuel is returned to the fuel tank by a separate fuel return line.

Test Description

Number(s) below refer to the step number(s) on the Diagnostic Chart.

2. Connect the fuel pressure gauge to the fuel feed line as shown in the fuel system illustration. Wrap a shop towel around the fuel pressure connection in order to absorb any fuel leakage that may occur when installing the fuel pressure gauge. With the ignition switch "ON" and the fuel pump running, the fuel pressure indicated by the fuel pressure gauge should be 333-376 kpa (3.4-3.8 kg/cm^2 / 48-55 psi). This pressure is controlled by the amount of pressure the spring inside the fuel pressure regulator can provide.
3. A fuel system that cannot maintain a constant fuel pressure has a leak in one or more of the following areas:
   - The fuel pump check valve.

- The fuel pump flex line.
- The valve or valve seat within the fuel pressure regulator.
- The fuel injector(s).

4. Fuel pressure that drops off during acceleration, cruise, or hard cornering may case a lean condition. A lean condition can cause a loss of power, surging, or misfire. A lean condition can be diagnosed using a Tech 1 Tech 2. If an extremely lean condition occurs, the oxygen sensor(s) will stop toggling. The oxygen sensor output voltage(s) will drop below 500 mV. Also, the fuel injector pulse width will increase.

IMPORTANT: Make sure the fuel system is not operating in the "Fuel Cut-Off Mode."

When the engine is at idle, the manifold pressure is low (high vacuum). This low pressure (high vacuum) is applied to the fuel pressure regulator diaphragm. The low pressure (high vacuum) will offset the pressure being applied to the fuel pressure regulator diaphragm by the spring inside the fuel pressure regulator. When this happens, the result is lower fuel pressure. The fuel pressure at idle will vary slightly as the barometric pressure changes, but the fuel pressure at idle should always be less than the fuel pressure noted in step 2 with the engine "OFF."

16. Check the spark plug associated with a particular fuel injector for fouling or saturation in order to determine if that particular fuel injector is leaking. If checking the spark plug associated with a particular fuel injector for fouling or saturation does not determine that a particular fuel injector is leaking, use the following procedure:
    - Remove the fuel rail, but leave the fuel lines and injectors connected to the fuel rail. Refer to *Fuel Rail Assembly* in *On-Vehicle Service*.
    - Lift the fuel rail just enough to leave the fuel injector nozzles in the fuel injector ports.

CAUTION: In order to reduce the risk of fire and personal injury that may result from fuel spraying on the engine, verify that the fuel rail is positioned over the fuel injector ports and verify that the fuel injector retaining clips are intact.

- **Pressurize the fuel system by connecting a 10 amp fused jumper between B+ and the fuel pump relay connector.**
- **Visually and physically inspect the fuel injector nozzles for leaks.**

17. A rich condition may result from the fuel pressure being above 376 kpa (55 psi). A rich condition may cause a DTC P0132 or a DTC P0172 to set. Driveability conditions associated with rich conditions can include hard starting (followed by black smoke) and a strong sulfur smell in the exhaust.

20. This test determines if the high fuel pressure is due to a restricted fuel return line or if the high fuel pressure is due to a faulty fuel pressure regulator.

21. A lean condition may result from fuel pressure below 333 kpa (48 psi). A lean condition may cause a DTC P0131 or a DTC P0171 to set. Driveability conditions associated with lean conditions can include hard starting (when the engine is cold), hesitation, poor driveability, lack of power, surging , and misfiring.

22. Restricting the fuel return line causes the fuel pressure to rise above the regulated fuel pressure. Command the fuel pump "ON" with the Tech 2. The fuel pressure should rise above 376 kpa (55 psi) as the fuel return line becomes partially closed.

NOTE: Do not allow the fuel pressure to exceed 414 kpa (60 psi). Fuel pressure in excess of 414 kpa (60 psi) may damage the fuel pressure regulator.

CAUTION: To reduce the risk of fire and personal injury:

- **It is necessary to relieve fuel system pressure before connecting a fuel pressure gauge. Refer to Fuel Pressure Relief Procedure, below.**
- **A small amount of fuel may be released when disconnecting the fuel lines. Cover fuel line fittings with a shop towel before disconnecting, to catch any fuel that may leak out. Place the towel in an approved container when the disconnect is completed.**

Fuel Pressure Relief Procedure

1. Remove the fuel cap.
2. Remove the fuel pump relay from the underhood relay center.
3. Start the engine and allow it to stall.
4. Crank the engine for an additional 3 seconds.

Fuel Gauge Installation

1. Remove the shoulder fitting cap.
2. Install fuel gauge 5-8840-0378-0 to the fuel supply line located in front of and above the right side valve cover.
3. Reinstall the fuel pump relay.

Fuel System Diagnosis

Step	Action	Value(s)	Yes	No
1	Was the “On-Board Diagnostic (OBD) System Check” performed?	—	Go to *Step 2*	Go to *OBD System Check*
2	1. Turn the ignition “OFF.” 2. Turn the air conditioning system “OFF.” 3. Relieve fuel system pressure and install the fuel pressure gauge. 4. Turn the ignition “ON.” NOTE: The fuel pump will run for approximately 2 seconds. Use the Tech 2 to command the fuel pump “ON”. 5. Observe the fuel pressure indicated by the fuel pressure gauge with the fuel pump running. Is the fuel pressure within the specified limits?	290-376 kpa (42-55 psi)	Go to *Step 3*	Go to *Step 17*
3	NOTE: The fuel pressure will drop when the fuel pump stops running, then it should stabilize and remain constant. Does the fuel pressure indicated by the fuel pressure gauge remain constant?	—	Go to *Step 4*	Go to *Step 12*
4	1. When the vehicle is at normal operation temperature, turn the ignition “ON” to build fuel pressure and observe the measurement on the gauge. 2. Start the engine and observe the fuel pressure gauge. Did the reading drop by the amount specified after the engine was started?	21-105 kpa (3-15 psi)	Go to *Step 5*	Go to *Step 9*
5	Is fuel pressure dropping off during acceleration, cruise, or hard cornering?	—	Go to *Step 6*	Check for improper fuel
6	Visually and physically inspect the following items for a restriction: ● The in-pipe fuel filter. ● The fuel feed line. Was a restriction found?	—	Verify repair	Go to *Step 7*
7	Remove the fuel tank and visually and physically inspect the following items: ● The fuel pump strainer for a restriction. ● The fuel line for a leak. ● Verify that the correct fuel pump is in the vehicle. Was a problem found in any of these areas?	—	Verify repair	Go to *Step 8*
8	Replace the fuel pump. Is the action complete?	—	Verify repair	—
9	1. Disconnect the vacuum hose from the fuel pressure regulator. 2. With the engine idling, apply 12-14 inches of vacuum to the fuel pressure regulator. Does the fuel pressure indicated by the fuel pressure gauge drop by the amount specified?	21-105 kpa (3-15 psi)	Go to *Step 10*	Go to *Step 11*

Fuel System Diagnosis (Cont'd)

Step	Action	Value(s)	Yes	No
10	Locate and repair the loss of vacuum to the fuel pressure regulator. Is the action complete?	—	Verify repair	—
11	Replace the fuel pressure regulator. Is the action complete?	—	Verify repair	—
12	1. Run the fuel pump with the Tech 2. 2. After pressure has built up, turn off the pump and clamp the supply hose shut with suitable locking pliers. Does the fuel pressure indicated by the fuel pressure gauge remain constant?	—	Go to *Step 13*	Go to *Step 15*
13	Visually inspect the fuel supply line and repair any leaks. Was a problem found?	—	Verify repair	Go to *Step 14*
14	Remove the fuel tank and inspect for leaky hose or in-tank fuel line. Was a problem found?	—	Verify repair	Go to *Step 8*
15	1. If the pliers are still clamped to the fuel supply hose, remove the locking pliers. 2. With suitable locking pliers, clamp the fuel return line to prevent fuel from returning to the fuel tank. 3. Run the fuel pump with the Tech 2. 4. After pressure has built up, remove power to the pump. Does the fuel pressure indicated by the fuel pressure gauge remain constant?	—	Go to *Step 11*	Go to *Step 16*
16	Locate and replace any leaking fuel injector(s). Is the action complete?	—	Verify repair	—
17	Is the fuel pressure indicated by the fuel pressure gauge above the specified limit?	376 kpa (55 psi)	Go to *Step 18*	Go to *Step 21*
18	1. Relieve the fuel pressure. Refer to the *Fuel Pressure Relief.* 2. Disconnect the fuel return line from the fuel rail. 3. Attach a length of flexible hose to the fuel rail return outlet passage. 4. Place the open end of the flexible hose into an approved gasoline container. 5. Run the fuel pump with the Tech 2. 6. Observe the fuel pressure indicated by the fuel pressure gauge with the fuel pump running. Is the fuel pressure within the specified limits?	290-376 kpa (42-55 psi)	Go to *Step 19*	Go to *Step 20*
19	Locate and correct the restriction in the fuel return line. Is the action complete?	—	Verify repair	—
20	Visually and physically inspect the fuel rail outlet passages for a restriction. Was a restriction found?	—	Verify repair	Go to *Step 11*
21	Is the fuel pressure indicated by the fuel pressure gauge above the specified value?	0 kpa (0 psi)	Go to *Step 22*	Go to *Step 23*

Fuel System Diagnosis (Cont'd)

Step	Action	Value(s)	Yes	No
22	1. Command the fuel pump "ON" with the Tech 2. 2. Using suitable pliers which will not damage the fuel hose, gradually apply pressure with the pliers to pinch the flexible fuel return hose closed. **CAUTION: Do not let the fuel pressure exceed the second specified value.** Does the fuel pressure indicated by the fuel pressure gauge rise above the first specified value?	376 kpa (55 psi). 414 kpa (60 psi).	Go to *Step 11*	Go to *Step 7*
23	1. Command the fuel pump "ON" with the Tech 2. 2. Remove the fuel filler cap and listen for the sound of the fuel pump running. 3. Turn the pump off. Was the fuel pump running?	—	Go to *Step 7*	Go to *Fuel System Electrical Test Chart*

Idle Air Control (IAC) System Check

Circuit Description

The Engine Control Module ECM controls engine idle speed with the idle air control (IAC) valve. To increase idle speed, the ECM retracts the IAC valve pintle away from its seat, allowing more air to bypass the throttle bore. To decrease idle speed, it extends the IAC valve pintle towards its seat, reducing bypass air flow. A Tech 2 will read the ECM commands to the IAC valve in counts. Higher counts indicate more air bypass (higher idle). Lower counts indicate less air is allowed to bypass (lower idle).

Diagnostic Aids

A slow, unstable, or fast idle may be caused by a non-IAC system problem that cannot be overcome by the IAC valve. Out of control range IAC Tech 2 counts will be above 60 if idle is too low, and zero counts if idle is too high. The following checks should be made to repair a non-IAC system problem:

- Vacuum leak (high idle) – If idle is too high, stop the engine. Fully extend (low) IAC with the IAC motor analyzer 5-8840-2312-0. Start the engine. If idle speed is above 800 RPM, locate and correct the vacuum leak, including the PCV system. Check for binding of the throttle blade or linkage.
- Lean heated oxygen sensor signal (high air/fuel ratio) – The idle speed may be too high or too low. Engine speed may vary up and down, and disconnecting the IAC valve does not help. Diagnostic trouble codes P0131, P0151, P0171, or P0174 may be set. Tech 2 oxygen (O2) voltage will be less than 100 mV (0.1 V). Check for low regulated fuel pressure, water in fuel, or a restricted injector.
- Rich heated oxygen sensor signal (low air/fuel ratio) – The idle speed will be too low. Tech 2 IAC counts will usually be above 80. The system is obviously rich and may exhibit black smoke in the exhaust.

  Tech 2 O2 voltage will be fixed at about 750 mV (0.75 V). Check for high fuel pressure, or a leaking or sticking injector. A silicon-contaminated heated oxygen sensor will show an O2 voltage slow to respond on the Tech 2.
- Throttle body – Remove the IAC valve and inspect the bore for foreign material.
- IAC valve electrical connections – IAC valve connections should be carefully checked for proper contact.
- PCV valve – An incorrect or faulty PCV valve may result in an incorrect idle speed. Refer to *Diagnosis, Rough Idle, Stalling*. If intermittent poor driveability or idle symptoms are resolved by disconnecting the IAC, carefully recheck the connections and valve terminal resistance, or replace the IAC.

Test Description

Number(s) below refer to the step number(s) on the Diagnostic Chart.

1. The IAC motor analyzer 5-8840-2312-0 is used to extend and retract the IAC valve. Valve movement is verified by an engine speed change. If no change in engine speed occurs, the valve can be resettled when removed from the throttle body.
2. This step checks the quality of the IAC movement in step 1. Between 700 revolutions per minute (RPM) and about 1500 RPM, the engine speed should change smoothly with each flash of the tester light in both extend and retract. If the IAC valve is retracted beyond the control range (about 1500 RPM), it may take many flashes to extend the IAC valve before engine speed will begin to drop. This is normal on certain engines. Fully extending the IAC may cause engine stall. This may be normal.

6. Steps 1 and 2 verified the proper IAC valve operation. This step checks the IAC circuits. Each lamp on the noid light should flash red and green while the IAC valve is cycled. While the sequence of color is not important, if either light is “OFF” or does not flash red and green, check the circuits for faults, beginning with poor terminal contacts.

Idle Air Control (IAC) System Check

Step	Action	Value(s)	Yes	No
1	1. Ignition “OFF.” 2. Connect the IAC motor analyzer 5-8840-2312-0 to the IAC valve. 3. Set the parking brake. 4. Block the wheels. 5. Turn the air conditioning “OFF.” 6. Idle the engine in Park (A/T) or Neutral (M/T). 7. Install the Tech 2. Display the RPM. 8. Use the IAC motor analyzer 5-8840-2312-0 to extend and retract the IAC valve. 9. The engine speed should decrease and increase as the IAC is cycled. Does the RPM change?	—	Go to *Step 2*	Go to *Step 3*
2	RPM should change smoothly with each flash of the IAC motor analyzer 5-8840-2312-0 light. Does the RPM change within the range specified?	700-1500 RPM	Go to *Step 6*	Go to *Step 3*
3	Check the IAC passages. Are the IAC passages OK?	—	Go to *Step 4*	Go to *Step 5*
4	Clear any obstruction from the IAC passages. Is the action complete?	—	Verify repair	—
5	Replace the IAC. Refer to *On-Vehicle Service, Idle Air Control Valve.* Is the action complete?	—	Verify repair	—
6	1. Install the appropriate IAC noid light from 5-8840-2312-0 into the Engine Control Module harness. 2. Cycle the IAC motor analyzer J 39027-A and observe the noid lights. 3. Both the lights should cycle red and green, but never “OFF,” as the RPM is changed over its range. Do the noid lights cycle red and green?	—	Go to *Step 7*	Go to *Step 8*
7	1. Use the other connector on the IAC motor analyzer 5-8840-2312-0 pigtail. 2. Check the resistance across the IAC coils. Measure the resistance between terminal A and terminal B. 3. Measure the resistance between terminal C and terminal D. Is the resistance within the specified range?	40-80 ohms	Go to *Step 9*	Go to *Step 10*
8	If the circuits did not test green and red, check the following: ● Faulty connector terminal contacts ● Open circuits, including connections ● Circuits shorted to ground or voltage ● Faulty Engine Control Module connection or Engine Control Module. Are repairs necessary?	—	Go to *Step 13*	—

Idle Air Control (IAC) System Check (Cont'd)

Step	Action	Value(s)	Yes	No
9	1. Check the resistance between the IAC terminal B and terminal C. 2. Check the resistance between the IAC terminal A and terminal D. Is the resistance infinite?	—	Go to *Step 11*	Go to *Step 12*
10	Replace the IAC. Refer to *On-Vehicle Service, Idle Air Control Valve.* Is the action complete?	—	Go to *Step 7*	—
11	Check the IAC valve and circuit. Are the IAC valve and circuit OK?	—	Refer to *Diagnostic Aids*	Go to *Step 12*
12	Replace the IAC. Refer to *On-Vehicle Service, Idle Air Control Valve*. Is the action Complete?	—	Go to *Step 9*	—
13	Repair as necessary. Is the action complete?	—	Go to *Step 6*	—

Barometric Pressure (BARO) Output Check

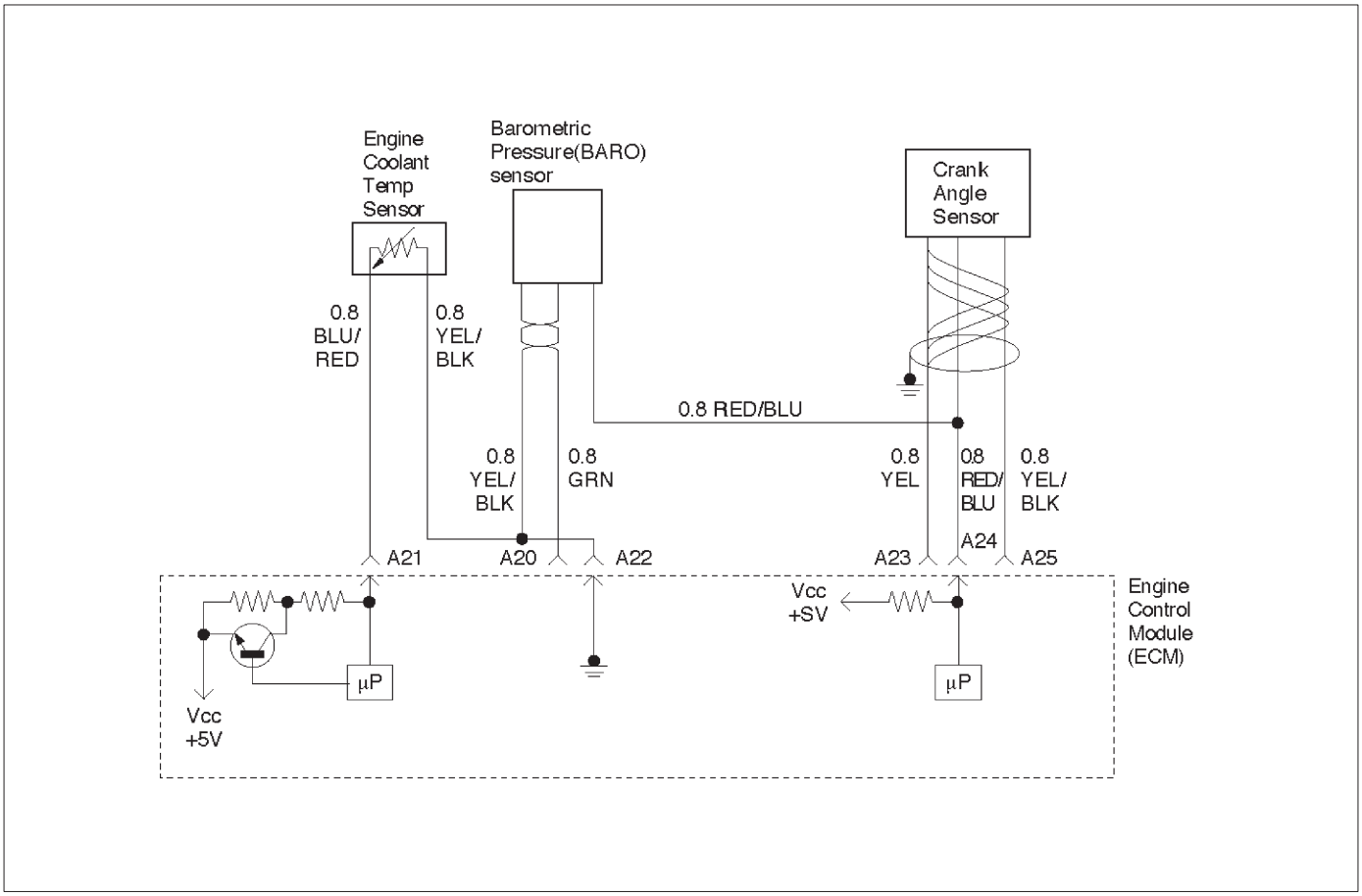

060RW072

Circuit Description

The barometric pressure (BARO) sensor measures the changes in the intake BARO which result from engine load (intake manifold vacuum) and engine speed changes; and converts these into a voltage output. The Engine Control Module ECM sends a 5-volt reference voltage to the BARO sensor. As the BARO changes, the output voltage of the sensor also changes. By monitoring the the sensor output voltage, the ECM knows the BARO. A lower pressure (low voltage) output voltage will be about 1-2 volts at idle. Higher pressure (high voltage) output voltage will be about 4-4.8 volts at wide open throttle. The BARO sensor is also used, under certain conditions, to measure barometric pressure, allowing the ECM to make adjustments for different altitudes.

Test Description

IMPORTANT: Be sure to used the same diagnostic test equipment for all measurements.

The number(s) below refer to the step number(s) on the Diagnostic Chart.

1. Applying 34 kpa (10 Hg) vacuum to the BARO sensor should cause the voltage to be 1.5-2.1 volts less than the voltage at step 1. Upon applying vacuum to the sensor, the change in voltage should be instantaneous. A slow voltage change indicates a faulty sensor.

IMPORTANT: Make sure the electrical connector remains securely fastened.

2. Disconnect the sensor from the bracket. Twist the sensor with your hand to check for an intermittent connection. Output changes greater than 0.10 volt indicate a bad sensor.

Barometric Pressure (BARO) Output Check

Step	Action	Value(s)	Yes	No
1	1. Turn the ignition “OFF” and leave it “OFF” for 15 seconds. 2. Ignition “ON.” Don’t crank engine. 3. The Tech 2 should indicate a barometric pressure (BARO) sensor voltage. 4. Compare this scan reading to scan reading of a known good vehicle obtained using the exact same procedure as in Steps 1–4. Is the voltage reading the same +/–0.40 volt?	—	Go to *Step 2*	Go to *Step 5*
2	1. Disconnect the BARO sensor and plug inletmanifold. 2. Connect a hand vacuum pump to the BARO sensor. 3. Start the engine. 4. Apply 34 kpa (10 Hg) of vacuum and note the voltage change. Is the voltage change 1.5-2.1 volts less than step 1?	—	Go to *Step 3*	Go to *Step 4*
3	No trouble found. Check the sensor cover for leakage or restriction. Does the cover supply vacuum to the BARO sensor only?	—	Go to *Step 5*	Go to *Step 4*
4	Repair the material to block. Is the action complete?	—	Verify repair	—
5	Check the sensor connection. Is the sensor connection good?	—	Go to *Step 5*	Go to *Step 6*
6	Replace the sensor. Refer to *On-Vehicle Service, BARO Sensor.* Is the action complete?	—	Verify repair	—
7	Repair the poor connection. Is the action complete?	—	Verify repair	—

ECM Diagnostic Trouble Codes

The following table lists the diagnostic trouble codes supported a Tech 2 and to flash.If any DTCs not listed here are displayed by a Tech 2, the Tech 2 data may be faulty; notify the Tech 2 manufacturer of any DTCs displayed that are not included in the following table.

ECM Diagnostic Trouble Codes

DTC using a Tech 2	Flash DTC	Description	Type	Illuminate MIL
P0101	61	MAF System Performance	B	Yes
P0102	61	MAF Sensor Circuit Low Frequency	A	Yes
P0103	61	MAF Sensor Circuit High Frequency	A	Yes
P0107	33	BARO Sensor Circuit Low Voltage	A	Yes
P0108	33	BARO Sensor Circuit High Voltage	A	Yes
P0112	23	IAT Sensor Circuit Low Voltage	A	Yes
P0113	23	IAT Sensor Circuit High Voltage	A	Yes
P0117	14	ECT Sensor Circuit Low Voltage	A	Yes
P0118	14	ECT Sensor Circuit High Voltage	A	Yes
P0121	21	TP System Performance	A	Yes
P0122	21	TP Sensor Circuit Low Voltage	A	Yes
P0123	21	TP Sensor Circuit High Voltage	A	Yes
P0131	15	HO2S Circuit Low Voltage Bank 1 Sensor 1	A	Yes
P0132	15	HO2S Circuit High Voltage Bank 1 Sensor 1	A	Yes
P0134	15	HO2S Circuit Insufficient Activity Bank 1 Sensor 1	A	Yes
P0171	44	Fuel Trim System Lean Bank 1	B	Yes
P0172	45	Fuel Trim System Rich Bank 1	B	Yes
P0201	31	Injector 1 Control Circuit	A	Yes
P0202	31	Injector 2 Control Circuit	A	Yes
P0203	31	Injector 3 Control Circuit	A	Yes
P0204	31	Injector 4 Control Circuit	A	Yes
P0205	31	Injector 5 Control Circuit	A	Yes
P0206	31	Injector 6 Control Circuit	A	Yes
P0336	29	58X Reference Signal Circuit	B	Yes
P0337	29	CKP Sensor Circuit Low Frequency	B	Yes
P0341	41	CMP Sensor Circuit Performance	B	Yes
P0342	41	CMP Sensor Circuit Low	B	Yes
P0351	42	Ignition 1 Control Circuit	A	Yes
P0352	42	Ignition 2 Control Circuit	A	Yes
P0353	42	Ignition 3 Control Circuit	A	Yes
P0354	42	Ignition 4 Control Circuit	A	Yes
P0355	42	Ignition 5 Control Circuit	A	Yes
P0356	43	Ignition 6 Control Circuit	A	Yes
P0502	24	VSS Circuit Low Input	B	Yes
P0562	66	System Voltage Low	D	No
P0563	66	System Voltage High	D	No

DTC using a Tech 2	Flash DTC	Description	Type	Illuminate MIL
P0601	51	ECM Memory	A	Yes
P1171	44	Fuel System Lean During Acceleration	A	Yes
P1508	22	IAC System Low RPM	B	Yes
P1509	22	IAC System High RPM	B	Yes

Diagnostic Trouble Code (DTC) P0101 (Flash DTC=61) MAF System Performance

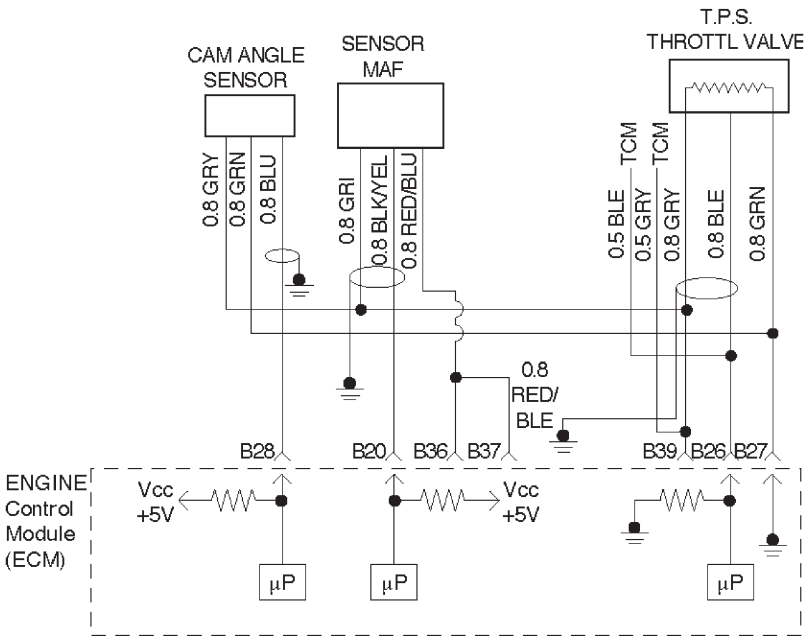

060RW077

Circuit Description

The mass air flow (MAF) sensor measures the amount of air which passes through it into the engine during a given time. The Engine Control Module ECM uses the mass air flow information to monitor engine operating conditions for fuel delivery calculations. A large quantity of air entering the engine indicates an acceleration or high load situation, while a small quantity or air indicates deceleration or idle.

The MAF sensor produces a frequency signal which can be monitored using a Tech 2. The frequency will vary within a range of around 4 to 7 g/s at idle to around 25 to 40 g/s at maximum engine load. DTC P0101 will be set if the signal from the MAF sensor does not match a predicted value based on throttle position and engine RPM.

Conditions for Setting the DTC

- The engine is running.
- No TP sensor or BARO, CMP, CKP, MAF sensor DTCs are set.
- The Engine Speed is between 2800 r.p.m and 4500 r.p.m.
- TP angle is between 1V and 3V.
- IAT is between —14˚C and 70˚C.
- Above conditions present for at least 3 second.
- MAF signal frequency indicates an airflow significantly higher or lower than a predicted value based on throttle position and engine RPM for a total of 12.5 seconds over a 25-second period of time.

Action Taken When the DTC Sets

- The ECM will illuminate the malfunction indicator lamp (MIL) after the second consecutive trip in which the fault is detected.
- The ECM calculates an airflow value based on idle air control valve position, throttle position, RPM and barometric pressure.
- The ECM will store conditions which were present when the DTC was set as Freeze Frame and in the Failure Records data.

Conditions for Clearing the MIL/DTC

- The ECM will turn the MIL “OFF” on the third consecutive trip cycle during which the diagnostic has been run and the fault condition is no longer present.
- A history DTC P0101 will clear after 40 consecutive warm-up cycles have occurred without a fault.
- DTC P0101 can be cleared by using the Tech 2 “Clear Info” function or by disconnecting the ECM battery feed.

Diagnostic Aids

An intermittent may be caused by the following:

- Poor connections.
- Mis-routed harness.
- Rubbed through wire insulation.

- Broken wire inside the insulation.

Refer to Intermittents under service category Symptoms. Any un-metered air may cause this DTC to set. Check for the following:

- The duct work at the MAF sensor for leaks.
- An engine vacuum leak.
- The PCV system for vacuum leaks.
- An incorrect PCV valve.
- The engine oil dip stick not fully seated.
- The engine oil fill cap loose or missing.

Test Description

Number(s) below refer to the step number(s) on the Diagnostic Chart.

2. Using Freeze Frame and/or Failure Records data may aid in locating an intermittent condition. If the DTC cannot be duplicated, the information included in the Freeze Frame and/or Failure Records data can be useful in determining how many miles since the DTC set. The Fail Counter and Pass Counter can also be used to determine how many ignition cycles the diagnostic reported a pass and/or a fail. Operate the vehicle within the same Freeze Frame conditions (RPM, load, vehicle speed , temperature, etc.) that were noted. This will isolate when the DTC failed.

   For any test that requires back probing the ECM or component harness connectors, use the Connector Test Adapter Kit 5-8840-0385-0. Using this kit will prevent any damage to the harness connector terminals.

3. Any un-metered air may cause this DTC to set. Check the PVC system for vacuum leaks. Also inspect the dip stick for being pulled out. Check the oil fill cap for being loose.
4. Verifies the signal circuit from the MAF sensor electrical connector to the ECM.
5. Verifies whether a ground and B+ circuit is available.
6. Checks a signal circuit for an open.
7. Checks for a signal circuit shorted to B+.

DTC P0101 – MAF System Performance

Step	Action	Value(s)	Yes	No
1	Was the “On-Board Diagnostic (OBD) System Check” performed?	—	Go to *Step 2*	Go to *OBD System Check*
2	1. Ignition “ON,” engine “OFF.” 2. Review the Freeze Frame and/or Failure Records data for this DTC and note parameters. 3. Ignition “OFF” for 15 seconds. 4. Start the engine and operate the vehicle within the conditions required for this diagnostic to run, and as close to the conditions recorded in Freeze Frame /Failure Records possible. (Special operating conditions that need to be met before the ECM will run this diagnostic (where applicable) are listed in “Conditions for Setting the DTC”). 5. Using the Tech 2, select “DTC,” then enter the DTC number which was set. Does the Tech 2 indicate that this diagnostic failed this ignition?	—	Go to *Step 3*	Refer to *Diagnostic Aids*
3	1. Check for the following conditions: • Objects blocking the MAF sensor inlet screen; • Intake manifold vacuum leaks; • Vacuum leaks at throttle body; • Crankcase ventilation valve faulty, missing, or incorrectly installed. 2. If a problem is found, repair as necessary. Was a problem found?	—	Verify repair	Go to *Step 4*

DTC P0101 – MAF System Performance (Cont'd)

Step	Action	Value(s)	Yes	No
4	1. Ignition "OFF." 2. Disconnect the MAF sensor connector. 3. Ignition "ON," engine "OFF." 4. Using DVM 5-8840-0285-0, measure voltage between the MAF sensor signal circuit and chassis ground. Is the voltage near the specified value?	5 V	Go to *Step 5*	Go to *Step 6*
5	Connect a test light (5-8840-0607-0) between the MAF sensor ignition feed and ground circuits at the MAF sensor harness connector. Is the test light "ON?"	—	Go to *Step 9*	Go to *Step 8*
6	Is the voltage less than the specified value?	4.5 V	Go to *Step 14*	Go to *Step 7*
7	1. Ignition "OFF," disconnect the ECM. 2. Ignition "ON," engine "OFF." 3. Measure voltage between the MAF signal circuit and ground. Does the voltage measure near the specified value?	0 V	Go to *Step 20*	Go to *Step 17*
8	Connect a test light (5-8840-0607-0) between the MAF sensor ignition feed circuit and chassis ground. Is the test light "ON?"	—	Go to *Step 9*	Go to *Step 10*
9	1. Check for a poor connection at the MAF sensor. 2. If a poor connection is found, replace faulty terminal(s). Was a poor connection found?	—	Verify repair	Go to *Step 10*
10	1. Check the MAF sensor damage. 2. If the MAF sensor damage is found, replace the MAF sensor. Was the MAF sensor damage found?	—	Verify repair	Go to *Step 11*
11	Replace the ECM. Is the action complete?	—	Verify repair	—

Diagnostic Trouble Code (DTC) P0102 (Flash DTC=61) MAF Sensor Circuit Low Frequency

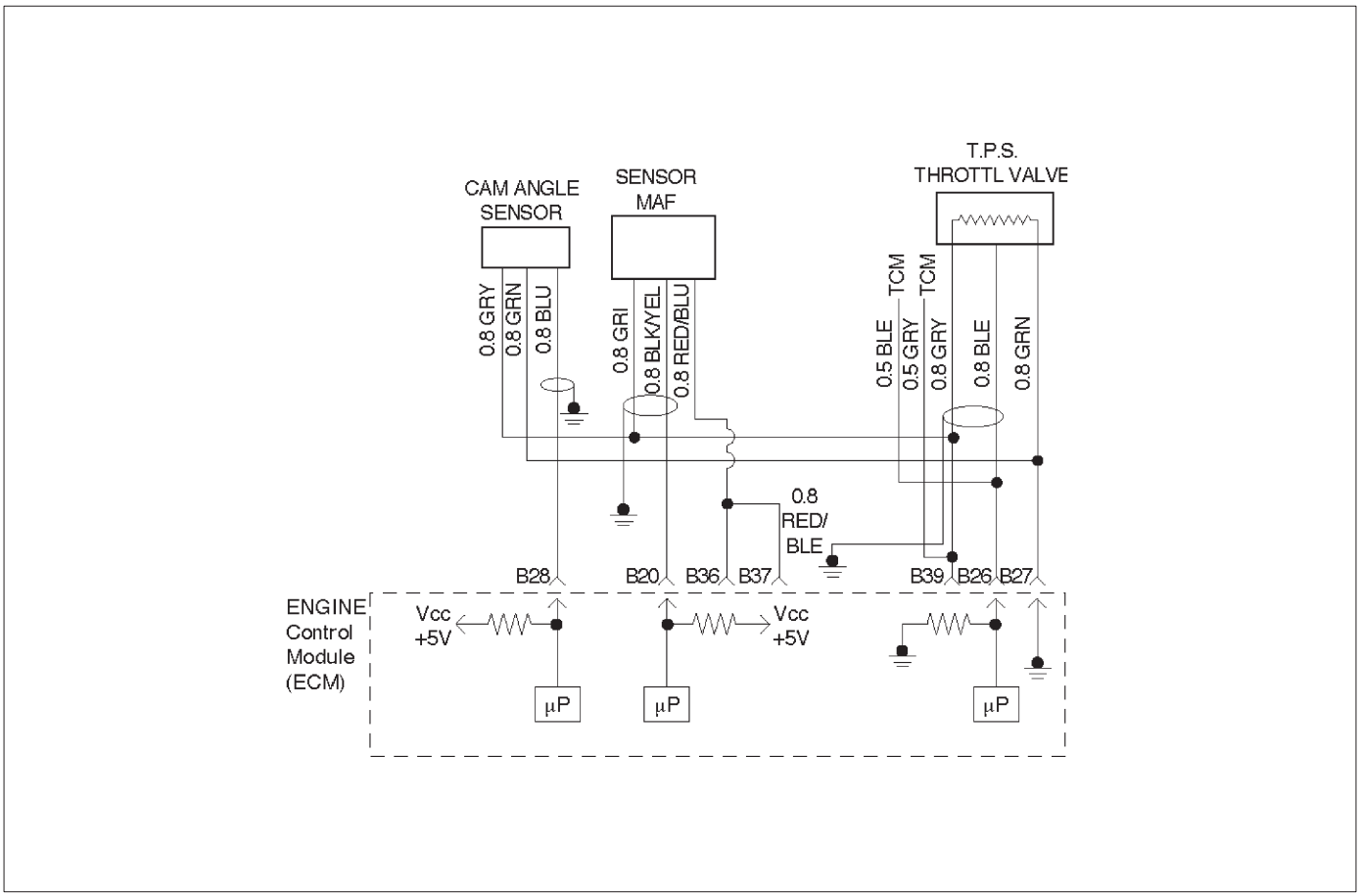

060RW077

Circuit Description

The mass air flow (MAF) sensor measures the amount of air which passes through it into the engine during a given time. The Engine Control Module ECM uses the mass air flow information to monitor engine operating conditions for fuel delivery calculations. A large quantity of air entering the engine indicates an acceleration or high load situation, while a small quantity of air indicates deceleration or idle.

The MAF sensor produces a frequency signal which can be monitored using a Tech 2. The frequency will vary within a range of around 4 to 7 g/s at idle to around 25 to 40 g/s at maximum engine load. DTC P0102 will be set if the signal from the MAF sensor is below the possible range of a normally operating MAF sensor.

Conditions for Setting the DTC

- The engine is running between 500 and 2000 RPM for greater than 2 seconds.
- System voltage is under 300m volts.

Action Taken When the DTC Sets

- The ECM will illuminate the malfunction indicator lamp (MIL) the first time the fault is detected.
- The ECM calculates an air flow value based on idle air control valve position, throttle position, RPM and barometric pressure.
- The ECM will store conditions which were present when the DTC was set as Freeze Frame and in the Failure Records data.

Conditions for Clearing the MIL/DTC

- The ECM will turn the MIL “OFF” on the third consecutive trip cycle during which the diagnostic has been run and the fault condition is no longer present.
- A history DTC P0102 will clear after 40 consecutive warm-up cycles have occurred without a fault.
- DTC P0102 can be cleared by using the Tech 2 “Clear Info” function or by disconnecting the ECM battery feed.

Diagnostic Aids

Check for the following conditions:

- Poor connection at ECM – Inspect harness connectors for backed-out terminals, improper mating, broken locks, improperly formed or damaged terminals, and poor terminal-to-wire connection.
- Misrouted harness – Inspect the MAF sensor harness to ensure that it is not routed too close to high voltage wires.
- Damaged harness – Inspect the wiring harness for damage. If the harness appears to be OK, observe the Tech 2 while moving connectors and wiring harnesses related to the MAF sensor. A change in the display will indicate the location of the fault.

- Plugged intake air duct or filter element – A wide-open throttle acceleration from a stop should cause the mass air flow displayed on a Tech 2 to increase from about 3-6 g/second at idle to 100 g/second or greater at the time of the 1-2 shift. If not, check for a restriction.

If DTC P0102 cannot be duplicated, the information included in the Failure Records data can be useful in determining vehicle mileage since the DTC was last set.

Test Description

Number(s) below refer to the step number(s) on the Diagnostic Chart.

2. This step verifies that the problem is present at idle.
4. A voltage reading of less than 4 or over 5 volts at the MAF sensor signal circuit indicates a fault in the wiring or a poor connection.
5. This verifies that ignition feed voltage and a good ground are available at the MAF sensor.

DTC P0102 – MAF Sensor Circuit Low Frequency

Step	Action	Value(s)	Yes	No
1	Was the “On-Board Diagnostic (OBD) System Check” performed?	—	Go to *Step 2*	Go to *OBD System Check*
2	1. Start the engine. 2. With the engine idling, monitor “MAF Frequency” display on the Tech 2. Is the “MAF Frequency” below the specified value?	4 ~ 7 g/s	Go to *Step 4*	Go to *Step 5*
3	1. Ignition “ON,” engine “OFF.” 2. Review and record Tech 2 Failure Records data. 3. Operate the vehicle within Failure Records conditions as noted. 4. Using a Tech 2, monitor “Specific DTC” info for DTC P0102. Does the Tech 2 indicate DTC P0102 failed this ignition?	—	Go to *Step 4*	Refer to *Diagnostic Aids*
4	1. Ignition “OFF.” 2. Disconnect the MAF sensor connector. 3. Ignition “ON,” engine “OFF.” 4. Using a DVM, measure voltage between the MAF sensor signal circuit and battery ground. Is the voltage near the specified value?	5 V	Go to *Step 5*	Go to *Step 8*
5	Connect a test light between the MAF sensor ignition feed and ground circuits at the MAF sensor harness connector. Is the test light “ON?”	—	Go to *Step 13*	Go to *Step 6*
6	Connect a test light between the MAF sensor ignition feed circuit and battery ground. Is the test light “ON?”	—	Go to *Step 12*	Go to *Step 7*
7	1. Check for a poor connection at the MAF sensor. 2. If a poor connection is found, replace the faulty terminal(s). Was a poor connection found?	—	Verify repair	Go to *Step 11*

DTC P0102 – MAF Sensor Circuit Low Frequency (Cont'd)

Step	Action	Value(s)	Yes	No
8	1. Ignition "OFF." 2. Disconnect the MAF sensor. 3. Disconnect the ECM connector for the MAF signal circuit. 4. Ignition "ON," engine "OFF." 5. With the DVM, measure the voltage between the MAF signal terminal at the ECM and battery ground. Is the voltage under the specified value?	4 V	Go to *Step 9*	Go to *Step 10*
9	1. Ignition "OFF." 2. Disconnect the ECM white connector. 3. Ignition "ON." 4. Check the MAF sensor signal circuit for a short to 5 volts. Is the action complete?	—	Verify repair	—
10	1. Ignition "OFF." 2. Disconnect the ECM white connector. 3. Ignition "ON." 4. Check the MAF sensor signal circuit between the ECM and the MAF sensor for an open, short to ground, or short to the MAF ground circuit. Is the action complete?	—	Verify repair	Go to *Step 13*
11	Locate and repair the open in the ground circuit to the MAF sensor. Is the action complete?	—	Verify repair	—
12	Locate and repair the open in the ignition feed circuit to the MAF sensor. Is the action complete?	—	Verify repair	—
13	Replace the MAF sensor. Is the action complete?	—	Verify repair	Go to *Step 14*
14	Replace the ECM. Is the action complete?	—	Verify repair	—

Diagnostic Trouble Code (DTC) P0103 (Flash DTC=61) MAF Sensor Circuit High Frequency

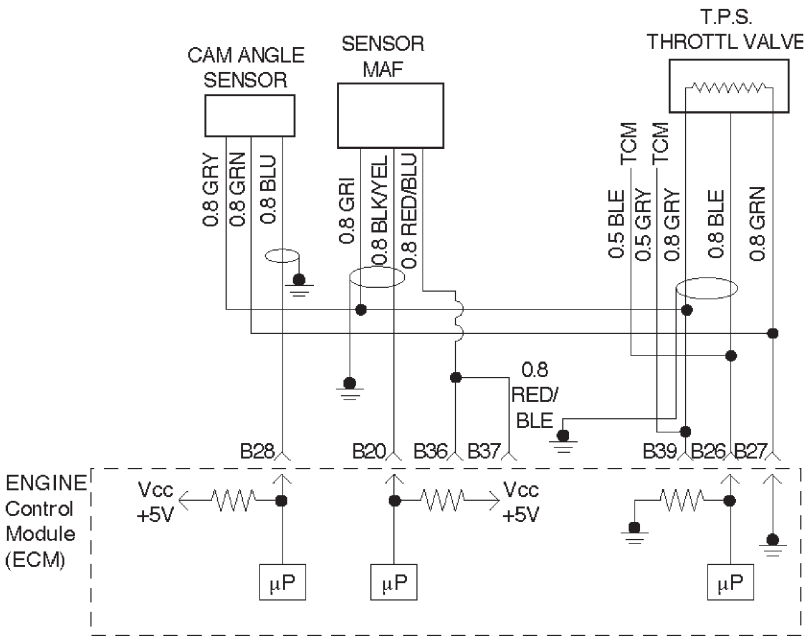

060RW077

Circuit Description

The mass air flow (MAF) sensor measures the amount of air which passes through it into the engine during a given time. The Engine Control Module ECM uses the mass air flow information to monitor engine operating conditions for fuel delivery calculations. A large quantity of air entering the engine indicates an acceleration or high load situation, while a small quantity of air indicates deceleration or idle.

The MAF sensor produces a frequency signal which can be monitored using a Tech 2. The frequency will vary within a range of around 4 ~ 7 g/s at idle to around 25 to 40 g/s at maximum engine load. DTC P0103 will be set if the signal from the MAF sensor is above the possible range of a normally operating MAF sensor.

Conditions for Setting the DTC

- The engine is running between 500 and 2000 RPM for more than 2 seconds.
- System voltage is above 5000m volts.
- Above conditions present for at least 961m sec.

Action Taken When the DTC Sets

- The ECM will illuminate the malfunction indicator lamp (MIL) the first time the fault is detected.
- The ECM calculates an airflow value based on idle air control valve position, throttle position, RPM and barometric pressure.
- The ECM will store conditions which were present when the DTC was set as Freeze Frame and in the Failure Records data.

Conditions for clearing the MIL/DTC

- The ECM will turn the MIL “OFF” on the third consecutive trip cycle during which the diagnostic has been run and the fault condition is no longer present.
- A history DTC P0103 will clear after 40 consecutive warm-up cycles have occurred without a fault.
- DTC P0103 can be cleared by using the Tech 2 “Clear Info” function or by disconnecting the ECM battery feed.

Diagnostic Aids

If DTC P0103 cannot be duplicated, the information included in the Failure Records data can be useful in determining vehicle mileage since the DTC was last set.

Test Description

Number(s) below refer to the step number(s) on the Diagnostic Chart.

2. This step verifies that the problem is present at idle.

4. A frequency reading with the MAF sensor connector disconnected indicates an electromagnetic interference (EMI) related fault.

DTC P0103 – MAF Sensor Circuit High Frequency

Step	Action	Value(s)	Yes	No
1	Was the “On-Board Diagnostic (OBD) System Check” performed?	—	Go to *Step 2*	Go to *OBD System Check*
2	1. Ignition “ON,” engine “OFF.” 2. Review and record Tech 2 Failure Records data. 3. Operate the vehicle within Failure Records conditions as noted. 4. Using a Tech 2, monitor “DTC” info for DTC P0103. Does the Tech 2 indicate DTC P0103 failed this ignition?	—	Go to *Step 3*	Refer to *Diagnostic Aids*
3	1. Start the engine. 2. With the engine idling, monitor “MAF Frequency” display on the Tech 2. Is “MAF Frequency” above the specified value?	25 to 40 g/s	Go to *Step 4*	Go to *Step 7*
4	1. Ignition “OFF.” 2. Disconnect the MAF sensor connector. 3. Ignition “ON,” engine idling. 4. Using a Tech 2, monitor “MAF Frequency.” Does the Tech 2 indicate a “MAF Frequency” at the specified value?	0 g/s	Go to *Step 5*	Go to *Step 6*
5	Replace the MAF sensor. Is the action complete?	—	Verify repair	Go to *Step 8*
6	1. Check the MAF harness for incorrect routing near high voltage components (solenoids, relays, motors). 2. If incorrect routing is found, correct the harness routing. Was a problem found?	—	Verify repair	Go to *Step 6*
7	1. With the engine idling, monitor “MAF Frequency” display on the Tech 2. 2. Quickly snap open throttle to wide open throttle while under a road load and record value. Does the Tech 2 indicate “MAF Frequency” above the specified value?	25 to 40 g/s	Go to *Step 5*	Go to *Step 8*
8	Replace the ECM. Is the action complete?	—	Verify repair	—

Diagnostic Trouble Code (DTC) P0107 (Flash DTC=33) BARO Sensor Circuit Low Voltage

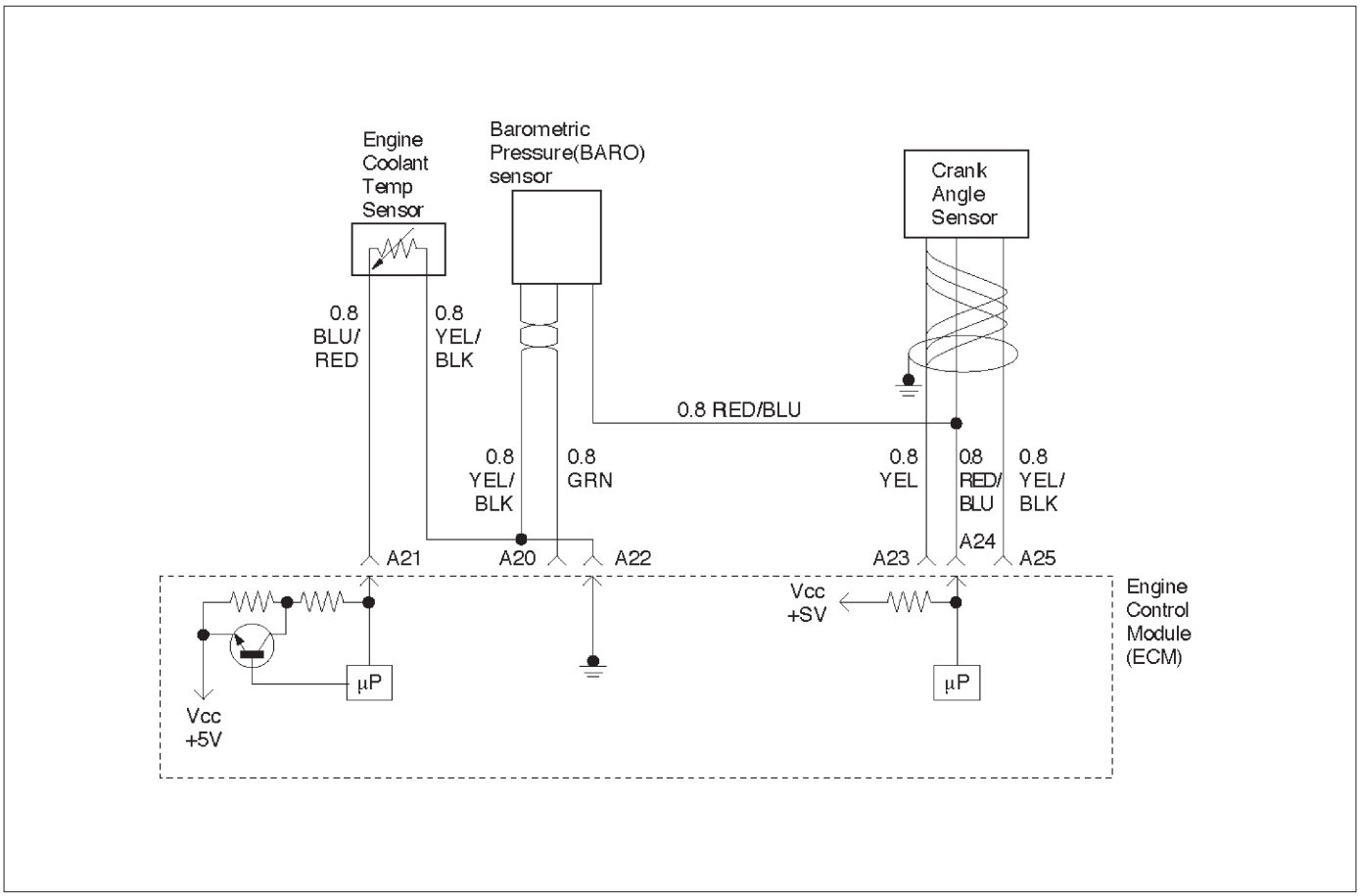

060RW072

Circuit Description

The barometric pressure (BARO) sensor responds to changes in intake manifold pressure (vacuum). The BARO sensor signal voltage to the Engine Control Module ECM varies from below 2 volts at idle (high vacuum) to above 4 volts with the ignition "ON," engine not running or at wide-open throttle (low vacuum).

The ECM monitors the BARO signals for voltages outside the normal range of the BARO sensor. If the ECM detects a BARO signal voltage that is excessively low, DTC P0107 will be set.

Conditions for Setting the DTC

- Ignition SW is ON.
- Above conditions present for at least 19 second.
- The BARO sensor voltage under 100m volts.

Action Taken When the DTC Sets

- The ECM will illuminate the malfunction indicator lamp (MIL) the first time the fault is detected.
- The ECM will default to a BARO value of 79.3 kpa.
- The ECM will store conditions which were present when the DTC was set as Freeze Frame and in the Failure Records data.

Conditions for Clearing the MIL/DTC

- The ECM will turn the MIL "OFF" on the third consecutive trip cycle during which the diagnostic has been run and the fault condition is no longer present.
- A history DTC P0107 will clear after 40 consecutive warm-up cycles have occurred without a fault.
- DTC P0107 can be cleared by using the Tech 2 "Clear Info" function or by disconnecting the ECM battery feed.

Diagnostic Aids

Check for the following conditions:

- Check for intermittent codes.
- The BARO sensor shares a ground with the ECT sensor, and the Transmission Fluid Temperature sensor.
- Poor connection at ECM – Inspect harness connectors for backed-out terminals, improper mating, broken locks, improperly formed or damaged terminals, and poor terminal-to-wire connection.
- Damaged harness – Inspect the wiring harness for damage. If the harness appears to be OK, observe the BARO display on the Tech 2 while moving connectors and wiring harnesses related to the sensor. A change in the display will indicate the location of the fault.

If DTC P0107 cannot be duplicated, the information included in the Failure Records data can be useful in determining vehicle mileage since the DTC was last set.

If it is determined that the DTC occurs intermittently, performing the DTC P0107 Diagnostic Chart may isolate the cause of the fault.

DTC P0107 – BARO Sensor Circuit Low Voltage

Step	Action	Value(s)	Yes	No
1	Was the “On-Board Diagnostic (OBD) System Check” performed?	—	Go to *Step 2*	Go to *OBD System Check*
2	1. Ignition “ON,” engine “OFF.” 2. With the throttle closed, observe the BARO value displayed on the Tech 2. Is the BARO value near the specified value?	11 kpa at sea level	Go to *Step 4*	Go to *Step 3*
3	1. Ignition “ON,” engine “OFF.” 2. Review and record Tech 2 Failure Records data. 3. Operate the vehicle within Failure Records conditions as noted. 4. Using a Tech 2, monitor “DTC” info for DTC P0107. Does the Tech 2 indicate DTC P0107 failed?	—	Go to *Step 4*	Refer to *Diagnostic Aids*
4	1. Ignition “OFF.” 2. Disconnect the BARO sensor electrical connector. 3. Jumper the 5 volt reference “A” circuit and the BARO signal together at the BARO sensor harness connector. 4. Ignition “ON.” 5. Observe the BARO value displayed on the Tech 2. Is the BARO value near the specified value?	5 V 104 kpa	Go to *Step 10*	Go to *Step 5*
5	1. Disconnect the jumper. 2. Connect a test light between B+ and the BARO sensor signal circuit at the BARO sensor harness connector. 3. Observe the BARO value displayed on the Tech 2. Is the BARO value near the specified value.	5 V 104 kpa	Go to *Step 6*	Go to *Step 8*
6	1. Ignition “OFF.” 2. Disconnect the ECM and check the 5 volt reference “A” circuit for an open or short to ground. 3. If the 5 volt reference “A” circuit is open or shorted to ground, repair it as necessary. Was the 5 volt reference “A” circuit open or shorted to ground?	—	Verify repair	Go to *Step 7*
7	Check the 5 volt reference “A” circuit for a poor connection at the ECM and replace the terminal if necessary. Did the terminal require replacement?	—	Verify repair	Go to *Step 11*
8	1. Ignition “OFF.” 2. Disconnect the ECM, and check the BARO signal circuit for an open, short to ground, or short to the sensor ground circuit. 3. If the BARO sensor signal circuit is open or shorted to ground, repair it as necessary. Was the BARO signal circuit open or shorted to ground?	—	Verify repair	Go to *Step 9*

DTC P0107 – BARO Sensor Circuit Low Voltage (Cont'd)

Step	Action	Value(s)	Yes	No
9	Check the BARO sensor signal circuit for a poor connection at the ECM and the BARO sensor; replace the terminal if necessary. Did the terminal require replacement?	—	Verify repair	Go to *Step 11*
10	Replace the BARO sensor. Is the action complete?	—	Verify repair	—
11	Replace the ECM. Is the action complete?	—	Verify repair	—

Diagnostic Trouble Code (DTC) P0108 (Flash DTC=33) BARO Sensor Circuit Hight Voltage

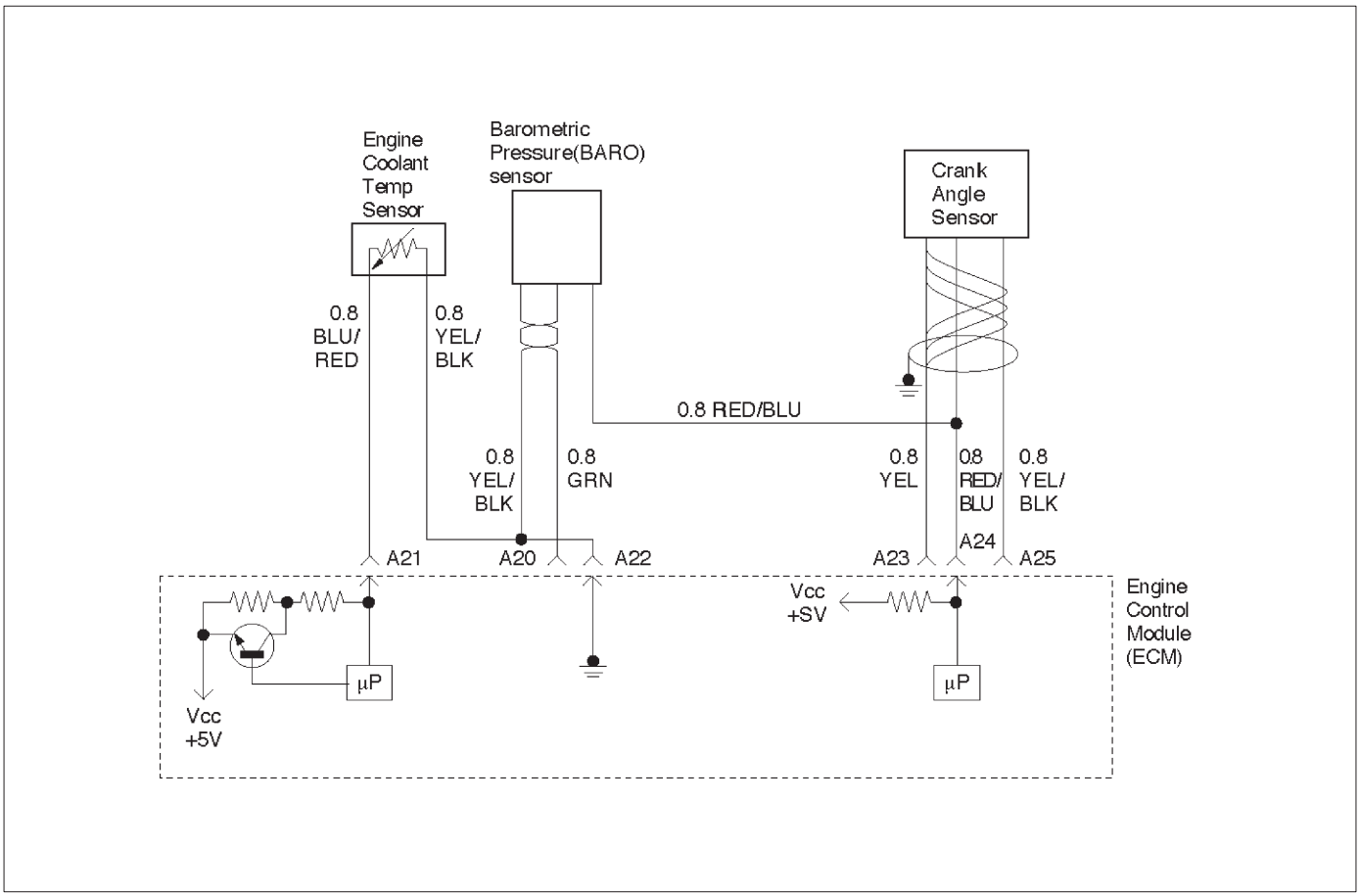

Circuit Description

The barometric pressure (BARO) sensor responds to changes in intake manifold pressure (vacuum). The BARO sensor signal voltage to the Engine Control Module ECM varies from below 2 volts at idle (high vacuum) to above 4 volts with the key “ON,” engine not running or at wide- open throttle (low vacuum).

The ECM monitors the BARO signals for voltages outside the normal range of the BARO sensor. If the ECM detects a BARO signal voltage that is excessively high, DTC P0108 will be set.

Conditions for Setting the DTC

- Ignition SW is ON.
- The BARO sensor voltage more than 5100V.
- Above conditions present for at least 19 second.

Action Taken When the DTC Sets

- The ECM will illuminate the malfunction indicator lamp (MIL) the first time the fault is detected.
- The ECM will default to a BARO value of 79.3 kpa.
- The ECM will store conditions which were present when the DTC was set as Freeze Frame and in the Failure Records data.

Conditions for Clearing the MIL/DTC

- The ECM will turn the MIL “OFF” on the third consecutive trip cycle during which the diagnostic has been run and the fault condition is no longer present.
- A history DTC P0108 will clear after 40 consecutive warm-up cycles have occurred without a fault.
- DTC P0108 can be cleared by using the Tech 2 “Clear Info” function or by disconnecting the ECM battery feed.

Diagnostic Aids

Check for the following conditions:

- Poor connection at ECM – Inspect harness connectors for backed-out terminals, improper mating, broken locks, improperly formed or damaged terminals, and poor terminal-to-wire connection.
- Damaged harness – Inspect the wiring harness for damage. If the harness appears to be OK, observe the BARO display on the Tech 2 while moving connectors and wiring harnesses related to the sensor. A change in the display will indicate the location of the fault.

If DTC P0108 cannot be duplicated, the information included in the Failure Records data can be useful in determining vehicle mileage since the DTC was last set. If it is determined that the DTC occurs intermittently, performing the DTC P1108 Diagnostic Chart may isolate the cause of the fault.

DTC P0108 – BARO Sensor Circuit High Voltage

Step	Action	Value(s)	Yes	No
1	Was the “On-Board Diagnostic (OBD) System Check” performed?	—	Go to *Step 2*	Go to *OBD System Check*
2	1. If the engine idle is rough, unstable or incorrect, repair the idle problem before using this chart. Refer to *Symptoms* section. 2. With the engine idling, note the BARO value on the Tech 2. Is the BARO reading above the specified value?	90 kpa	Go to *Step 4*	Go to *Step 3*
3	1. Ignition “ON,” engine “OFF.” 2. Review and record Tech 2 Failure Records data. 3. Operate the vehicle within Failure Records conditions as noted. 4. Using a Tech 2, monitor “ DTC” info for DTC P0108. Does the Tech 2 indicate DTC P0108 failed this ignition?	—	Go to *Step 4*	Refer to *Diagnostic Aids*
4	1. Ignition “OFF.” 2. Disconnect the BARO sensor electrical connector. 3. Ignition “ON.” 4. Note the BARO sensor voltage displayed on the Tech 2. Is the BARO sensor voltage at the specified value?	0.0 V 11 kpa	Go to *Step 5*	Go to *Step 6*
5	Probe the sensor ground circuit with a test light to B+. Is the test light “ON?”	—	Go to *Step 7*	Go to *Step 9*
6	1. Check the BARO signal circuit for a short to voltage or a short to the 5 volt reference “A” circuit. 2. If the BARO sensor signal circuit is shorted, repair circuit as necessary. Was the BARO sensor signal circuit shorted?	—	Verify repair	Go to *Step 11*
7	1. Check for a poor sensor ground terminal connection at the BARO sensor electrical connector. 2. If a problem if found, replace the faulty terminal. Did the terminal require replacement?	—	Verify repair	Go to *Step 8*
8	Check for a plugged or leaking vacuum supply to the BARO sensor. Is the vacuum supply plugged or leaking?	—	Verify repair	Go to *Step 12*
9	1. Check for a poor sensor ground terminal connection at the ECM. 2. If a problem is found, replace the faulty terminal. Did the terminal require replacement?	—	Verify repair	Go to *Step 10*
10	1. Check the continuity of the BARO sensor ground circuit. 2. If the BARO sensor ground circuit measures over 5 ohms, repair open or poor connection. Was a condition found and corrected?	—	Verify repair	Go to *Step 11*

DTC P0108 – BARO Sensor Circuit High Voltage (Cont'd)

Step	Action	Value(s)	Yes	No
11	Replace the ECM. Is the action complete?	—	Verify Repair	—
12	Replace the BARO sensor. Is the action complete?	—	Verify repair	—

Diagnostic Trouble Code (DTC) P0112 (Flash DTC=23) IAT Sensor Circuit Low Voltage

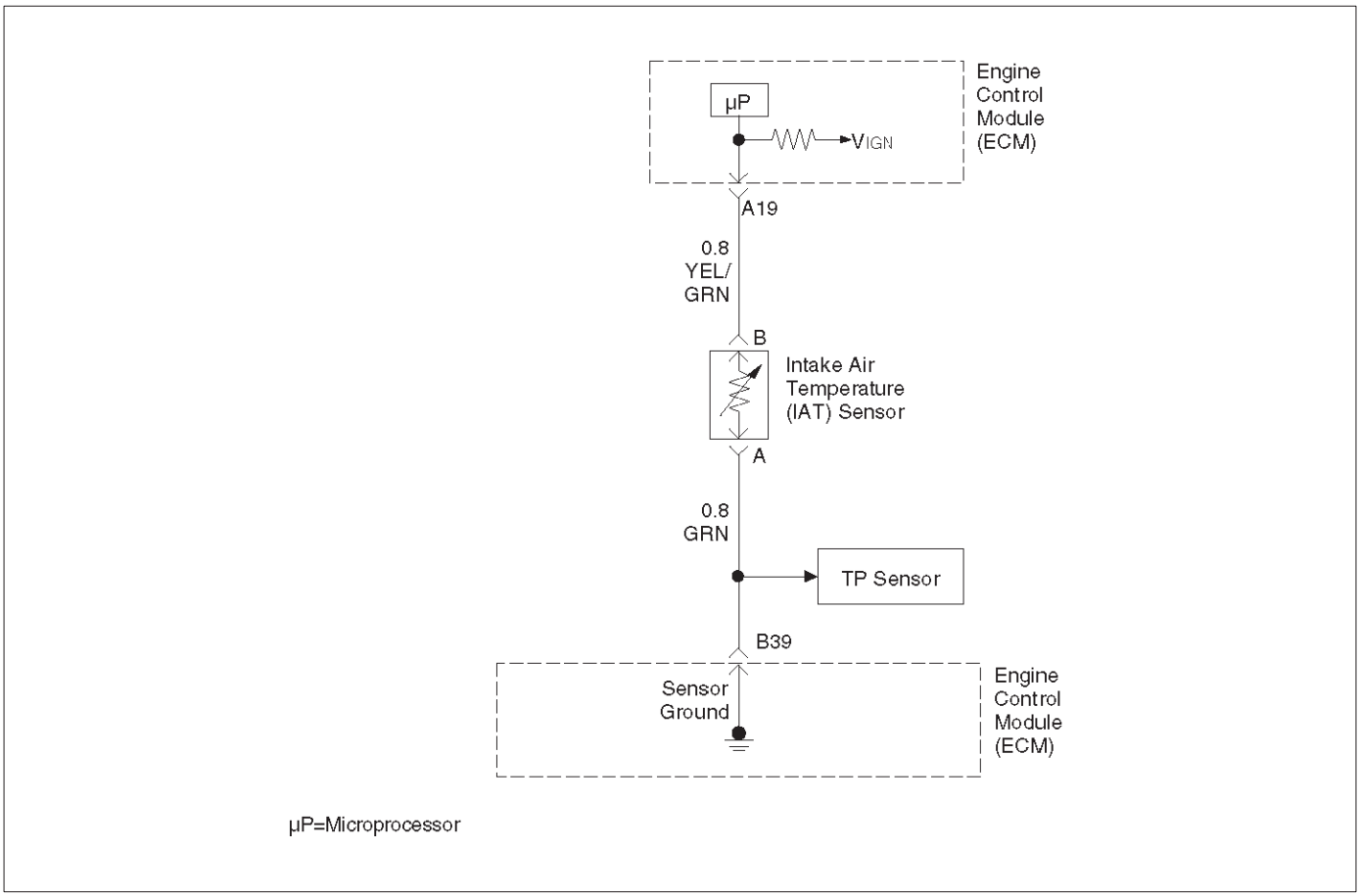

060RW057

Circuit Description

The intake air temperature (IAT) sensor is a thermistor which measures the temperature of the air entering the engine. The Engine Control Module ECM applies 5 volts through a pull-up resistor to the IAT sensor. When the intake air is cold, the sensor resistance is high and the ECM will monitor a high signal voltage on the IAT signal circuit. If the intake air is warm, the sensor resistance is lower, causing the ECM to monitor a lower voltage. DTC P0112 will set when the ECM detects an excessively low signal voltage on the intake air temperature sensor signal circuit.

Conditions for Setting the DTC

- Ignition SW is ON.
- IAT signal voltage is under 160m volts.
- Above conditions present for at least 5 second.

Action Taken When the DTC Sets

- The ECM will illuminate the malfunction indicator lamp (MIL) the first time the fault is detected.
- The ECM will store conditions which were present when the DTC was set as Freeze Frame and in the Failure Records data.

Conditions for Clearing the MIL/DTC

- The ECM will turn the MIL “OFF” on the third consecutive trip cycle during which the diagnostic has been run and the fault condition is no longer present.
- A history DTC P0112 will clear after 40 consecutive warm-up cycles have occurred without a fault.
- DTC P0112 can be cleared by using the Tech 2 “Clear Info” function or by disconnecting the ECM battery feed.

Diagnostic Aids

Check for the following conditions:

- Poor connection at ECM – Inspect harness connectors for backed-out terminals, improper mating, broken locks, improperly formed or damaged terminals, and poor terminal-to-wire connection.
- Damaged harness – Inspect the wiring harness for damage. If the harness appears to be OK, observe the IAT display on the Tech 2 while moving connectors and wiring harnesses related to the IAT sensor. A change in the IAT display will indicate the location of the fault.

If DTC P0112 cannot be duplicated, the information included in the Failure Records data can be useful in determining vehicle mileage since the DTC was last set.

Test Description

Number(s) below refer to the step number(s) on the Diagnostic Chart:

2. Verifies that the fault is present.

3. If DTC P0112 can be repeated only by duplicating the Failure Records condition, refer to the *Temperature vs. Resistance Value* table. The table may be used to test the IAT sensor at various temperatures to evaluate the possibility of a "shifted" sensor that may be stored above or below a certain temperature. If this is the case, replace the IAT sensor. If the IAT sensor appears to be OK, the fault is intermittent; refer to *Diagnostic Aids*.

Intake Air Temperature Sensor

˚C	˚F	OHMS
Temperature vs. Resistance Values (approximate)		
100	212	177
80	176	332
60	140	667
45	113	1188
35	95	1802
25	77	2796
15	59	4450
5	41	7280
–5	23	12300
–15	5	21450
–30	–22	52700
–40	–40	100700

DTC P0112 – IAT Sensor Circuit Low Voltage

Step	Action	Value(s)	Yes	No
1	Was the “On-Board Diagnostic (OBD) System Check” performed?	—	Go to *Step 2*	Go to *OBD System Check*
2	1. Ignition “ON,” engine “OFF.” 2. Using a Tech 2, monitor the intake air temperature (IAT). Is the intake air temperature greater than the specified value?	148˚C (283˚F)	Go to *Step 4*	Go to *Step 3*
3	1. Ignition “ON,” engine “OFF.” Review and record Tech 2 Failure Records data. 2. Operate the vehicle within Failure Records conditions as noted. 3. Using a Tech 2, monitor the “ DTC” info for DTC P0112. Does the Tech 2 indicate DTC P0112 failed this ignition?	—	Refer to *Test Description*	Refer to *Diagnostic Aids*
4	1. Ignition “OFF.” 2. Disconnect the IAT sensor electrical connector. 3. Ignition “ON.” 4. Observe the intake air temperature on the Tech 2. Is the intake air temperature below the specified value?	–38˚C (–36˚F)	Go to *Step 6*	Go to *Step 5*
5	1. Ignition “OFF.” 2. Disconnect the ECM electrical connectors. 3. Check the IAT sensor signal circuit for a short to ground. Is the IAT sensor signal circuit shorted to ground?	—	Verify repair	Go to *Step 7*
6	Replace the IAT sensor. Is the action complete?	—	Verify repair	—
7	Replace the ECM. Is the action complete?	—	Verify repair	—

Diagnostic Trouble Code (DTC) P0113 (Flash DTC=23) IAT Sensor Circuit High Voltage

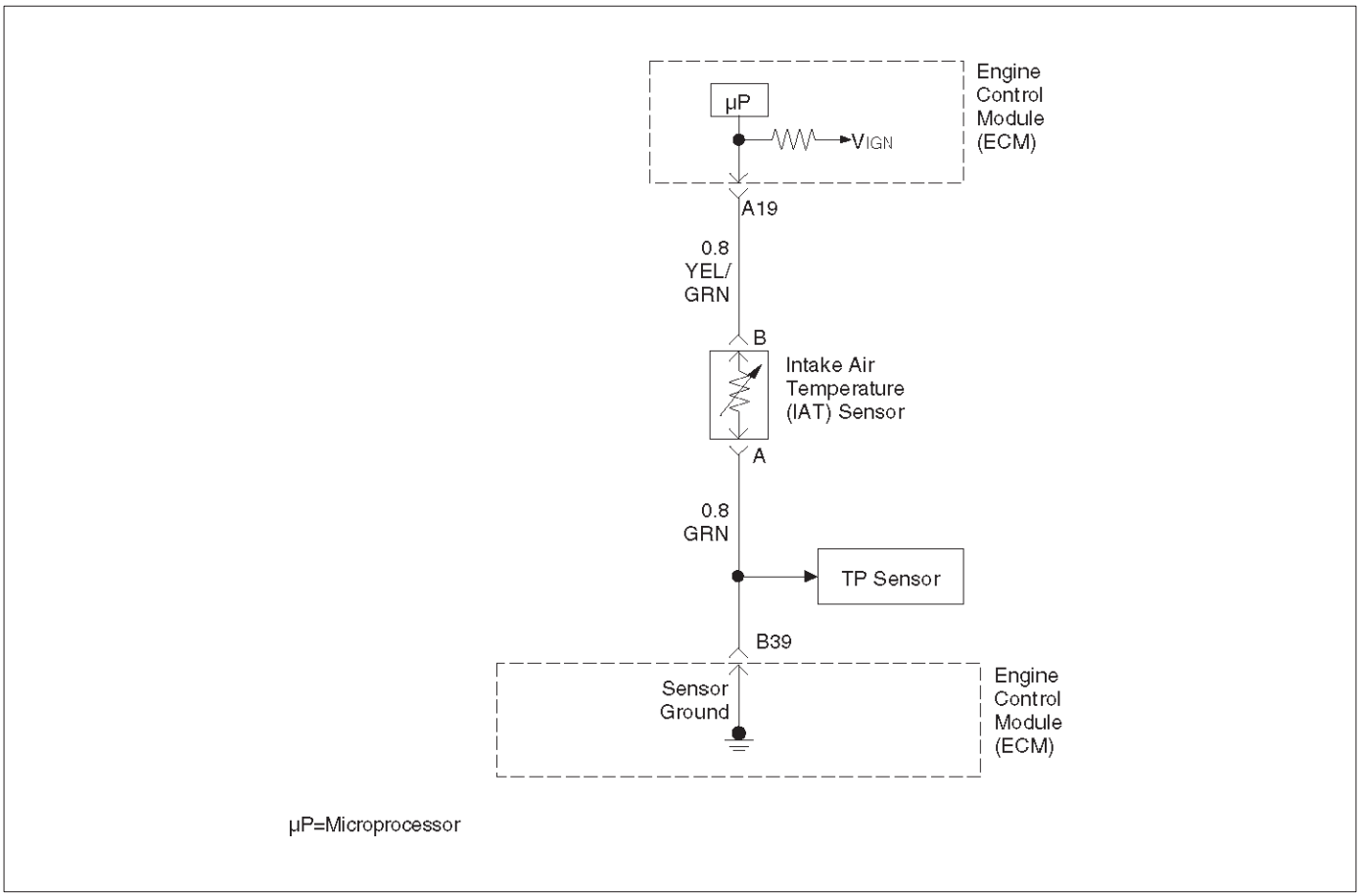

060RW057

Circuit Description

The intake air temperature (IAT) sensor is a thermistor which measures the temperature of the air entering the engine. The Engine Control Module ECM applies 5 volts through a pull-up resistor to the IAT sensor. When the intake air is cold, the sensor resistance is high and the ECM will monitor a high signal voltage on the IAT signal circuit. If the intake air is warm, the sensor resistance is lower causing the ECM to monitor a lower voltage. DTC P0113 will set when the ECM detects an excessively high signal voltage on the intake air temperature sensor signal circuit.

Conditions for Setting the DTC

- Ignition SW is ON.
- The ECT sensor voltage more than 5000m volts.
- Above conditions present for at least 5 second.

Action Taken When the DTC Sets

- The ECM will illuminate the malfunction indicator lamp (MIL) the first time the fault is detected.
- The ECM will store conditions which were present when the DTC was set as Freeze Frame and in the Failure Records data.

Conditions for Clearing the MIL/DTC

- The ECM will turn the MIL “OFF” on the third consecutive trip cycle during which the diagnostic has been run and the fault condition is no longer present.
- A history DTC P0113 will clear after 40 consecutive warm-up cycles have occurred without a fault.
- DTC P0113 can be cleared by using the Tech 2 “Clear Info” function or by disconnecting the ECM battery feed.

Diagnostic Aids

Check for the following conditions:

- Poor connection at ECM – Inspect harness connectors for backed-out terminals, improper mating, broken locks, improperly formed or damaged terminals, and poor terminal-to-wire connection.
- Damaged harness – Inspect the wiring harness for damage. If the harness appears to be OK, observe the IAT display on the Tech 2 while moving connectors and wiring harnesses related to the IAT sensor. A change in the IAT display will indicate the location of the fault.

If DTC P0113 cannot be duplicated, the information included in the Failure Records data can be useful in determining vehicle mileage since the DTC was last set.

Test Description

Number(s) below refer to the step number(s) on the Diagnostic Chart:

2. Verifies that the fault is present.
3. If DTC P0113 can be repeated only by duplicating the Failure Records conditions, refer to the "Temperature vs. Resistance Values" table. The table may be used to test the IAT sensor at various temperatures to evaluate the possibility of a "shifted" sensor that may be open above or below a certain temperature. If this is the case, replace the IAT sensor. If the IAT sensor appears to be OK, the fault is intermittent; refer to *Diagnostic Aids*.

Intake Air Temperature Sensor

˚C	˚F	OHMS
Temperature vs. Resistance Values (approximate)		
100	212	177
80	176	332
60	140	667
45	113	1188
35	95	1802
25	77	2796
15	59	4450
5	41	7280
–5	23	12300
–15	5	21450
–30	–22	52700
–40	–40	100700

DTC P0113 –IAT Sensor Circuit High Voltage

Step	Action	Value(s)	Yes	No
1	Was the "On-Board Diagnostic (OBD) System Check" performed?	—	Go to *Step 2*	Go to *OBD System Check*
2	Ignition "ON," engine "OFF." Observe the "Intake Air Temp" display on the Tech 2. Is the "Intake Air Temp" below the specified value?	–38˚C (–36˚F)	Go to *Step 4*	Go to *Step 3*
3	1. Ignition "ON," engine "OFF." 2. Review and record Tech 2 Failure Records data parameters. 3. Operate the vehicle within Failure Records conditions as noted. 4. Using a Tech 2, monitor " DTC" info for DTC P0113. Does the Tech 2 indicate DTC P0113 failed?	—	Refer to *Test Description*	Refer to *Diagnostic Aids*
4	1. Ignition "OFF." 2. Disconnect the IAT sensor electrical connector. 3. Jumper the IAT signal circuit and the sensor ground circuit together at the IAT sensor harness connector. 4. Ignition "ON." 5. Observe the "Intake Air Temp" display on the Tech 2. Is the "Intake Air Temp" at the specified value?	140˚C (284˚F)	Go to *Step 6*	Go to *Step 5*
5	1. Jumper the IAT signal circuit at the IAT sensor harness connector to chassis ground. 2. Observe the "Intake Air Temp" display on the Tech 2. Is the "Intake Air Temp" at the specified value?	140˚C (284˚F)	Go to *Step 7*	Go to *Step 8*

DTC P0113 –IAT Sensor Circuit High Voltage (Cont'd)

Step	Action	Value(s)	Yes	No
6	Check for poor connections at the IAT sensor and replace terminals if necessary. Did any terminals require replacement?	—	Verify repair	Go to *Step 10*
7	1. Ignition "OFF." 2. Disconnect the ECM, and check the IAT sensor ground circuit for an open. 3. If the IAT sensor ground circuit is open, repair it as necessary. Was the IAT sensor ground circuit open?	—	Verify repair	Go to *Step 9*
8	1. Ignition "OFF." 2. Disconnect the ECM, and check the IAT signal circuit for an open. 3. If the IAT sensor signal circuit is open, repair it as necessary. Was the IAT signal circuit open?	—	Verify repair	Go to *Step 9*
9	Check for a poor sensor ground or IAT signal circuit terminal connection at the ECM and replace terminal(s) if necessary. Did any of the terminals need to be replaced?	—	Verify repair	Go to *Step 11*
10	Replace the IAT sensor. Is the action complete?	—	Verify repair	—
11	Replace the ECM. Is the action complete?	—	Verify repair	—

Diagnostic Trouble Code (DTC) P0117 (Flash DTC=14) ECT Sensor Circuit Low Voltage

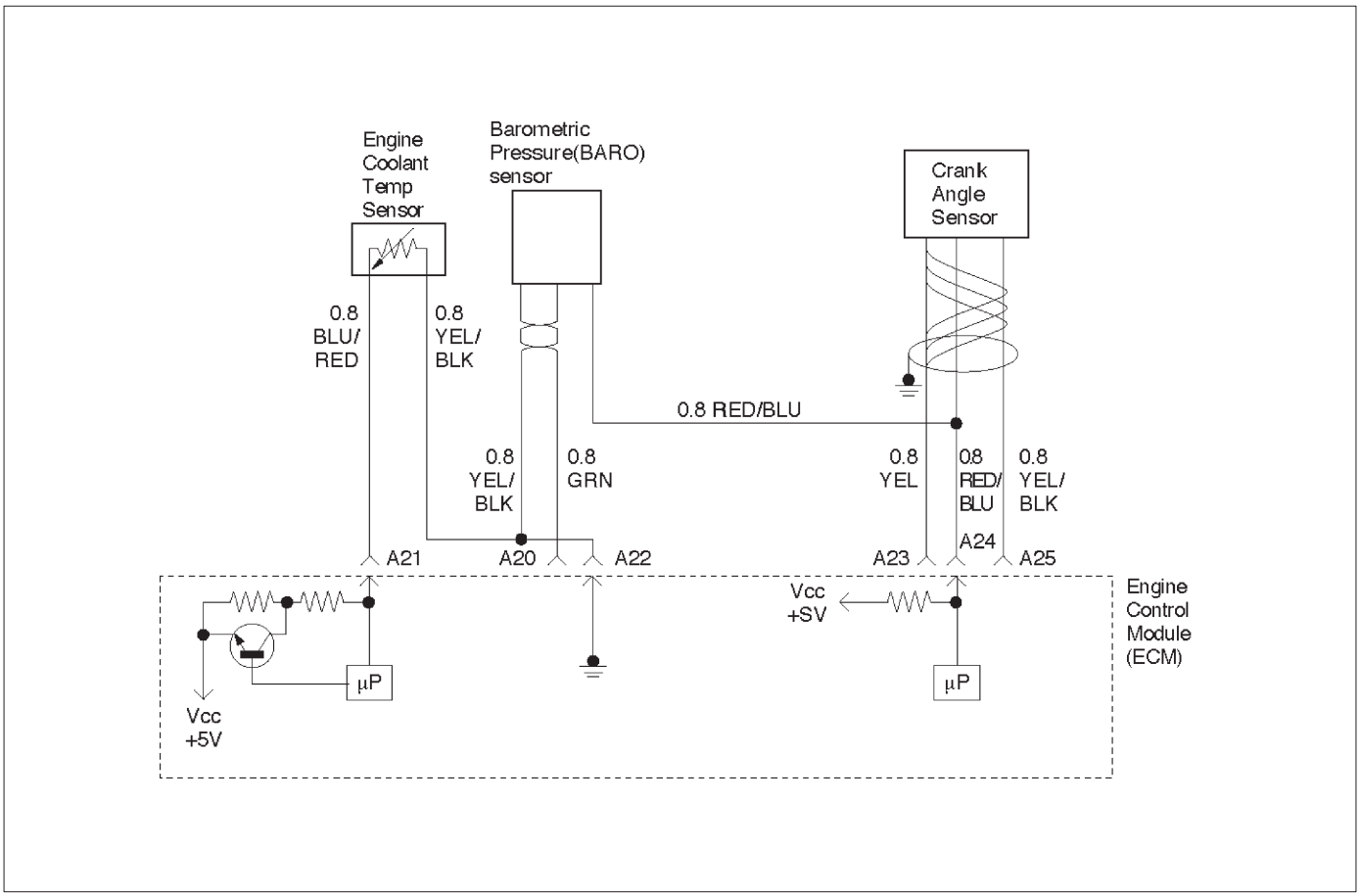

060RW072

Circuit Description

The engine coolant temperature (ECT) sensor is a thermistor mounted on a coolant crossover pipe at the rear of the engine. The Engine Control Module ECM applies a voltage (about 5 volts) through a pull-up resistor to the ECT signal circuit. When the engine coolant is cold, the sensor (thermistor) resistance is high, therefore the ECM will measure a high signal voltage. As the engine coolant warms, the sensor resistance becomes lower, and the ECT signal voltage measured at the ECM drops. With a fully warmed-up engine, the ECT signal voltage should measure about 1.5 to 2.0 volts.

Conditions for Setting the DTC

- Ignition SW is ON.
- The ECT sensor voltage is under 80m volts.
- Above conditions present for at least 5 second.

Action Taken When the DTC Sets

- The ECM will illuminate the malfunction indicator lamp (MIL) the first time the fault is detected.
- The ECM will substitute the ECT reading with a default engine coolant temperature value. The default value is based on start-up intake air temperature and running time.
- The ECM will store conditions which were present when the DTC was set as Freeze Frame and in the Failure Records data.

Conditions for Clearing the MIL/DTC

- The ECM will turn the MIL “OFF” on the third consecutive trip cycle during which the diagnostic has been run and the fault condition is no longer present.
- A history DTC P0117 will clear after 40 consecutive warm-up cycles have occurred without a fault.
- DTC P0117 can be cleared by using the Tech 2 “Clear Info” function or by disconnecting the ECM battery feed.

Diagnostic Aids

Check for the following conditions:

- Poor connection at ECM – Inspect harness connectors for backed-out terminals, improper mating, broken locks, improperly formed or damaged terminals, and poor terminal-to-wire connection.
- Damaged harness – Inspect the wiring harness for damage. If the harness appears to be OK, observe the ECT display on the Tech 2 while moving connectors and wiring harnesses related to the ECT sensor. A change in the ECT display will indicate the location of the fault.

If DTC P0117 cannot be duplicated, the information included in the Failure Records data can be useful in determining vehicle mileage since the DTC was last set. If it is determined that the DTC occurs intermittently.

Test Description

Number(s) below refer to the step number(s) on the Diagnostic Chart.

2. Verifies that the fault is present.

3. If DTC P0117 can be repeated only by duplicating the Failure Records conditions, refer to the "Temperature vs. Resistance Values" table. The table may be used to test the ECT sensor at various temperatures to evaluate the possibility of a "shifted" sensor that may be shorted above or below a certain temperature. If this is the case, replace the ECT sensor. If the ECT sensor appears to be OK, the fault is intermittent; refer to *Diagnostic Aids*.

Engine Coolant Temperature Sensor

˚C	˚F	OHMS
Temperature vs. Resistance Values (approximate)		
100	212	177
80	176	332
60	140	667
45	113	1188
35	95	1802
25	77	2796
15	59	4450
5	41	7280
–5	23	12300
–15	5	21450
–30	–22	52700
–40	–40	100700

DTC P0117 – ECT Sensor Low Voltage

Step	Action	Value(s)	Yes	No
1	Was the "On-Board Diagnostic (OBD) System Check" performed?	—	Go to *Step 2*	Go to *OBD System Check*
2	1. Ignition "ON," engine "OFF." 2. Observe the "Eng Cool Temp" display on the Tech 2. Is the "Eng Cool Temp" below the specified value?	139˚C (282˚F)	Go to *Step 4*	Go to *Step 3*
3	1. Ignition "ON," engine "OFF." 2. Review and record Tech 2 Failure Records data. 3. Operate the vehicle within Failure Records conditions as noted. 4. Using a Tech 2, monitor " DTC" info for DTC P0117. Does the Tech 2 indicate DTC P0117 failed this ignition?	—	Go to *Step 4*	Refer to *Diagnostic Aids*
4	1. Disconnect the ECT sensor electrical connector. 2. Observe the "Eng Cool Temp" display on the Tech 2. Is the "Eng Cool Temp" at the specified value?	–39˚C (–38˚F)	Go to *Step 6*	Go to *Step 5*
5	1. Ignition "OFF." 2. Disconnect the ECM and check the ECT signal circuit for a short to ground or a short to the sensor ground circuit. 3. If the ECT signal circuit is shorted. repair it as necessary. Was the ECT signal circuit shorted to ground?	—	Verify repair	Go to *Step 7*
6	Replace the ECT sensor. Is the action complete?	—	Verify repair	—
7	Replace the ECM. Is the action complete?	—	Verify repair	—

Diagnostic Trouble Code (DTC) P0118 (Flash DTC=14) ECT Sensor Circuit High Voltage

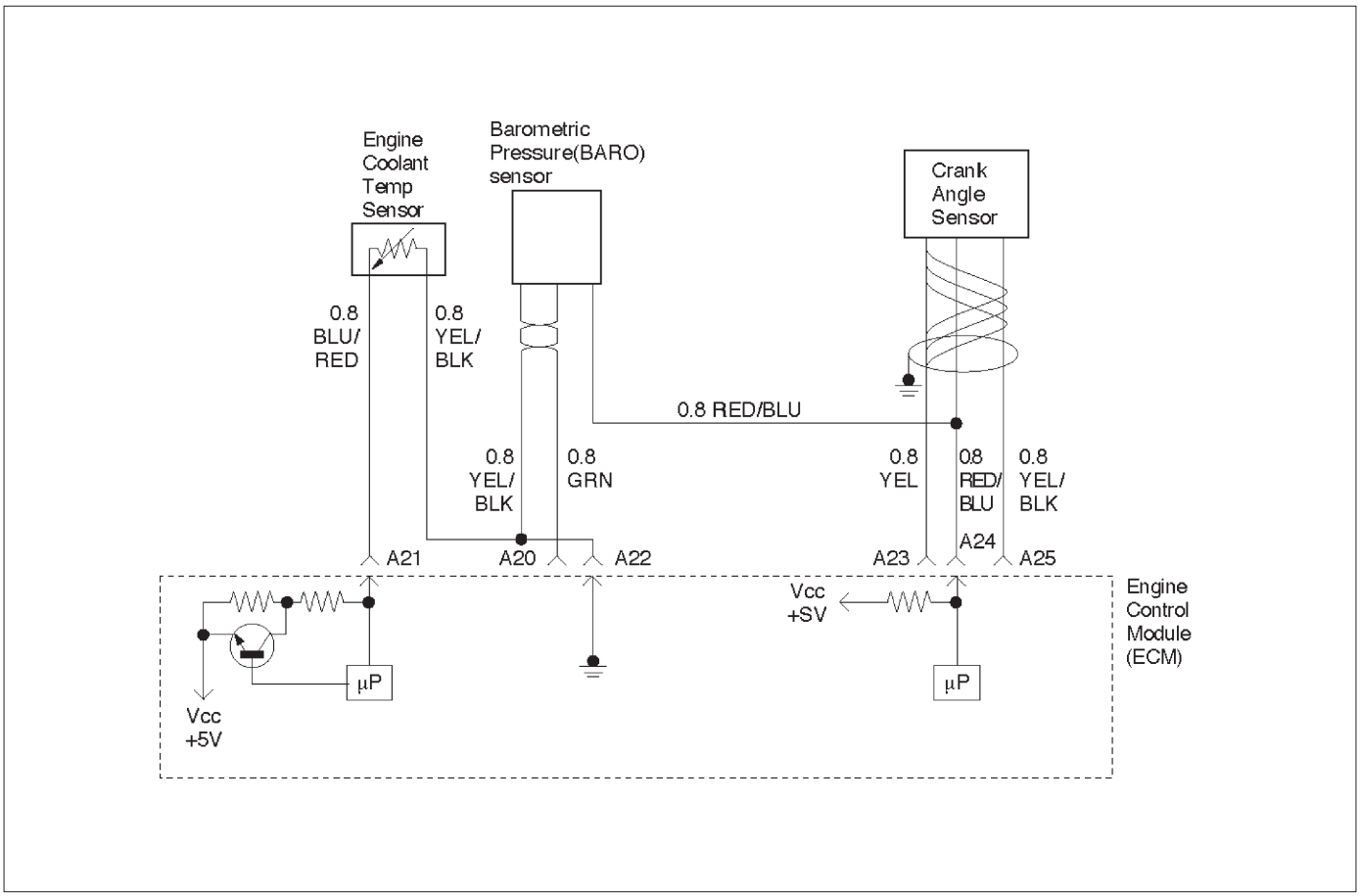

060RW072

Circuit Description

The engine coolant temperature (ECT) sensor is a thermistor mounted in on a coolant crossover pipe at the rear of the engine. The Engine Control Module ECM applies a voltage (about 5 volts) through a pull-up resistor to the ECT signal circuit. When the engine coolant is cold, the sensor (thermistor) resistance is high, therefore the ECM will measure a high signal voltage. As the engine coolant warms, the sensor resistance becomes less, and the ECT signal voltage measured at the ECM drops. With a fully warmed-up engine, the ECT signal voltage should measure about 1.5 to 2.0 volts.

Conditions for Setting the DTC

- Ignition SW is ON.
- The ECT sensor voltage more than 5000m volts.
- Above conditions present for at least 5 second.

Action Taken When the DTC Sets

- The ECM will illuminate the malfunction indicator lamp (MIL) the first time the fault is detected.
- The ECM will substitute the ECT reading with a default engine coolant temperature value. The default value is based on start-up intake air temperature and running time.
- The ECM will store conditions which were present when the DTC was set as Freeze Frame and in the Failure Records data.

Conditions for Clearing the MIL/DTC

- The ECM will turn the MIL “OFF” on the third consecutive trip cycle during which the diagnostic has been run and the fault condition is no longer present.
- A history DTC P0118 will clear after 40 consecutive warm-up cycles have occurred without a fault.
- DTC P0118 can be cleared by using the Tech 2 “Clear Info” function or by disconnecting the ECM battery feed.

Diagnostic Aids

Check for the following conditions:

- Poor connection at ECM – Inspect harness connectors for backed-out terminals, improper mating, broken locks, improperly formed or damaged terminals, and poor terminal-to-wire connection.
- Damaged harness – Inspect the wiring harness for damage. If the harness appears to be OK, observe the ECT display on the Tech 2 while moving connectors and wiring harnesses related to the ECT sensor. A change in the ECT display will indicate the location of the fault.

If DTC P0118 cannot be duplicated, the information included in the Failure Records data can be useful in determining vehicle mileage since the DTC was last set. If it is determined that the DTC occurs intermittently, performing the DTC P1115 Diagnostic Chart may isolate the cause of the fault.

Test Description

Number(s) below refer to the step number(s) on the Diagnostic Chart.

2. Verifies that the fault is present.

3. If DTC P0118 can be repeated only by duplicating the Failure Records conditions, refer to the “Temperature vs. Resistance Value” table. The table may be used to test the ECT sensor at various temperatures to evaluate the possibility of a “shifted” sensor that may be shorted above or below a certain temperature. If this is the case, replace the ECT sensor. If the ECT sensor appears to be OK, the fault is intermittent; refer to *Diagnostic Aids*.

Engine Coolant Temperature Sensor

˚C	˚F	OHMS
Temperature vs. Resistance Values (approximate)		
100	212	177
80	176	332
60	140	667
45	113	1188
35	95	1802
25	77	2796
15	59	4450
5	41	7280
–5	23	12300
–15	5	21450
–30	–22	52700
–40	–40	100700

DTC P0118 – ECT Sensor Circuit High Voltage

Step	Action	Value(s)	Yes	No
1	Was the “On-Board Diagnostic (OBD) System Check” performed?	—	Go to *Step 2*	Go to *OBD System Check*
2	1. Ignition “ON,” engine “OFF.” 2. Observe the “Eng Cool Temp” display on the Tech 2. Is the “Eng Cool Temp” below the specified value?	–39˚C (–38˚F)	Go to *Step 4*	Go to *Step 3*
3	1. Ignition “ON,” engine “OFF.” 2. Review and record Tech 2 Failure Records data. 3. Operate the vehicle within Failure Records conditions as noted. 4. Using a Tech 2, monitor the “ DTC” info for DTC P0118. Does the Tech 2 indicate DTC P0118 failed?	—	Refer to *Test Description*	Refer to *Diagnostic Aids*
4	1. Disconnect the ECT sensor electrical connector. 2. Jumper the ECT signal circuit and the sensor ground circuit together at the ECT sensor harness connector. 3. Observe the “Eng Cool Temp” display on the Tech 2. Is the “Eng Cool Temp” at the specified value?	140˚C (284˚F)	Go to *Step 6*	Go to *Step 5*
5	1. Jumper the ECT signal circuit at the ECT sensor harness connector to chassis ground. 2. Observe the “Eng Cool Temp” display on the Tech 2. Is the “Eng Cool Temp” at the specified value?	140˚C (284˚F)	Go to *Step 7*	Go to *Step 8*
6	Check for poor connections at the ECT sensor and replace terminals if necessary. Did any terminals require replacement?	—	Verify repair	Go to *Step 10*
7	1. Ignition “OFF.” 2. Disconnect the ECM, and check the ECT sensor ground circuit for an open. 3. If the ECT sensor ground circuit is open, repair it as necessary. Was the ECT sensor ground circuit open?	—	Verify repair	Go to *Step 9*
8	1. Ignition “OFF.” 2. Disconnect the ECM, and check the ECT signal circuit for an open. 3. If the ECT sensor signal circuit is open, repair it as necessary. Was the ECT signal circuit open?	—	Verify repair	Go to *Step 9*
9	Check for a poor sensor ground or ECT signal circuit terminal connection at the ECM and replace terminal(s) if necessary. Did any of the terminals need to be replaced?	—	Verify repair	Go to *Step 11*
10	Replace the ECT sensor. Is the action complete?	—	Verify repair	—
11	Replace the ECM. Is the action complete?	—	Verify repair	—

Diagnostic Trouble Code (DTC) P0121 (Flash DTC=21) TP System Performance

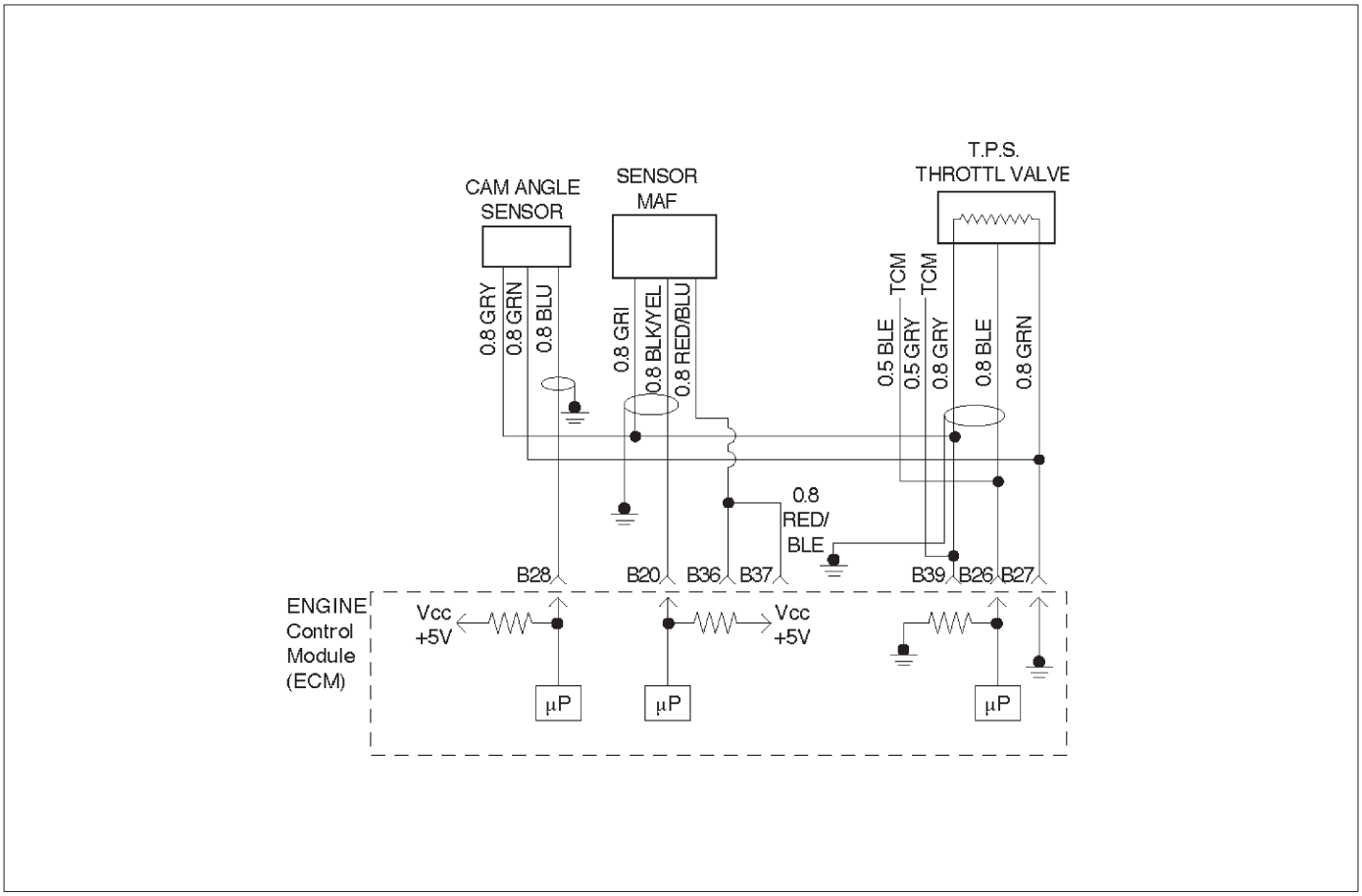

060RW077

Circuit Description

The throttle position (TP) sensor circuit provides a voltage signal that changes relative to throttle blade angle. The signal voltage will vary from about 0.6 volts at closed throttle to about 4.5 volts at wide open throttle (WOT).
The TP signal is one of the most important inputs used by the Engine Control Module ECM for fuel control and many of the ECM-controlled outputs. The ECM monitors throttle position and compares actual throttle position from the TP sensor to a predicted TP value calculated from engine speed. If the ECM detects an out-of-range condition, DTC P0121 will set.

Conditions for Setting the DTC

- The engine is running.
- No BARO/ECT/MAF/CKP/CMP DTCs, or P0122, P0123 DTCs are set.
- BARO reading is below 3000m volts.
- Throttle is steady, throttle angle is changing less than 1%.
- ECT reading more than 75˚C.
- Above conditions present for at least second.

Action Taken When the DTC Sets

- The ECM will illuminate the malfunction indicator lamp (MIL) after the second consecutive trip in which the fault is detected.
- The ECM will store conditions which were present when the DTC was set as Freeze Frame and in the Failure Records data.
- The ECM will use a default throttle position based on mass air flow and RPM.

Conditions for Clearing the MIL/DTC

- The ECM will turn the MIL “OFF” on the third consecutive trip cycle during which the diagnostic has been run and the fault condition is no longer present.
- A history DTC P0121 will clear after 40 consecutive warm-up cycles have occurred without a fault.
- DTC P0121 can be cleared by using the Tech 2 “Clear info ” function or by disconnecting the ECM battery feed.

Diagnostic Aids

Check for the following conditions:

- Skewed BARO signal or faulty BARO sensor – An incorrect BARO signal may cause the ECM to incorrectly calculate the predicted TP sensor value during high engine load situations. Check for an unusually low BARO reading. This condition can cause DTC P0121 to be set.
- Poor connection at ECM – Inspect harness connectors for backed-out terminals, improper mating, broken locks improperly formed or damaged terminals, and poor terminal-to-wire connection.
- Damaged harness – Inspect the wiring harness for damage. If the harness appears to be OK, observe the ECT display on the Tech 2 while moving connectors

and wiring harnesses related to the sensor. A change in the display will indicate the location of the fault.

If DTC P0121 cannot be duplicated, the information included in the Failure Records data can be useful in determining vehicle mileage since the DTC was last set.

DTC P0121 –TP System Performance

Step	Action	Value(s)	Yes	No
1	Was the “On-Board Diagnostic (OBD) System Check” performed?	—	Go to *Step 2*	Go to *OBD System Check*
2	1. Ignition “ON,” engine not running. 2. Observe the BARO reading on the Tech 2. Is the BARO reading less than the specified value?	65 kpa	Go to *Step 3*	Go to *Step 6*
3	1. Disconnected the BARO sensor. 2. Connect a test light between the 5 volt reference “A” circuit and the BARO signal circuit at the BARO sensor harness connector. 3. Observe the BARO reading on the Tech 2. Is the BARO reading less than the specified value?	65 kpa	Go to *Step 5*	Go to *Step 4*
4	1. Check the BARO signal circuit between the ECM and the BARO sensor for an open, short to ground, or short to the BARO ground circuit. 2. If the BARO signal circuit is open or shorted, repair it as necessary. Was the BARO signal circuit open or shorted?	—	Verify repair	Go to *Step 12*
5	Replace the BARO sensor. Is the action complete?	—	Verify repair	—
6	Observe the TP angle reading on the Tech 2 while slowly opening the throttle. Does the TP angle increase steadily and evenly from the closed throttle value to the wide open throttle value?	Closed throttle = 0% Wide open throttle = 100%	Refer to *Diagnostic Aids*	Go to *Step 7*
7	1. Disconnect the TP sensor. 2. Observe the TP sensor reading on the Tech 2. Is the TP sensor reading near the specified value?	0 V	Go to *Step 8*	Go to *Step 9*
8	1. Connect a test light between the 5 volt reference “A” circuit and the TP sensor signal circuit at the TP sensor harness connector. 2. Observe the TP sensor reading on the Tech 2. Is the TP sensor reading at the specified value?	5 V	Go to *Step 11*	Go to *Step 10*
9	Check the following items: 1. TP signal circuit for a short to voltage. 2. TP sensor ground circuit for high resistance between the ECM and the TP sensor. 3. TP sensor ground circuit for a poor connection. 4. If a problem is found, repair wiring harness as necessary. Was a problem found?	—	Verify repair	Go to *Step 12*

DTC P0121 –TP System Performance (Cont'd)

Step	Action	Value(s)	Yes	No
10	Check the following items: 1. TP signal circuit or 5 volt reference "A" circuit for a poor connection. 2. TP signal circuit or 5 volt reference "A" circuit for high resistance between the ECM and the TP sensor. 3. If a problem is found, repair wiring harness as necessary. Was a problem found?	—	Verify repair	Go to *Step 12*
11	Replace the TP sensor. Is the action complete?	—	Verify repair	—
12	Replace the ECM. Is the action complete?	—	Verify repair	—

Diagnostic Trouble Code (DTC) P0122 (Flash DTC=21) TP Sensor Circuit Low Voltage

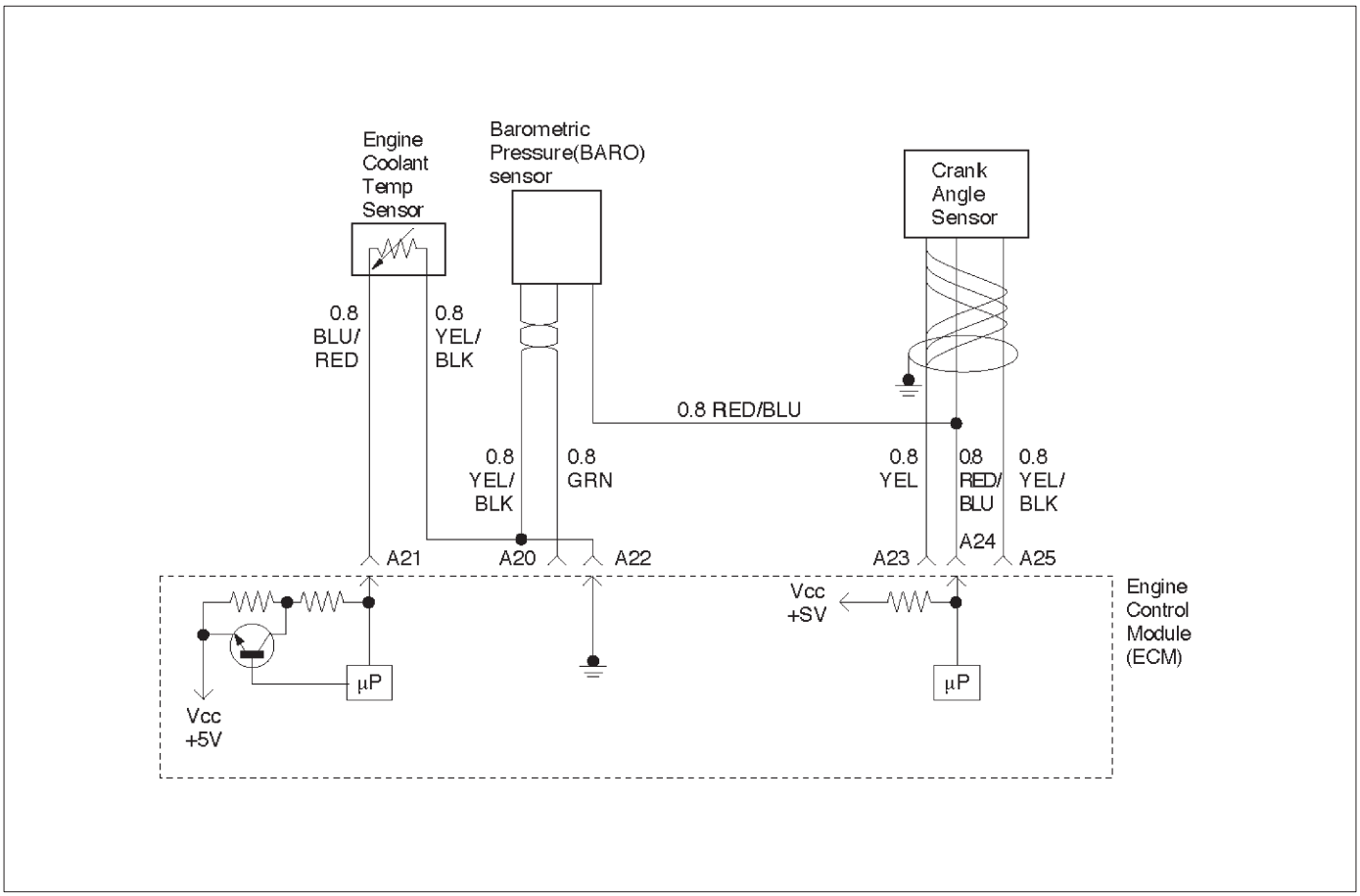

060RW072

Circuit Description

The throttle position (TP) sensor circuit provides a voltage signal that changes relative to throttle blade angle. The signal voltage will vary from below 0.6 volts at closed throttle to about 4.5 volts at wide open throttle (WOT). The TP signal is used by the Engine Control Module ECM for fuel control and many of the ECM-controlled outputs.

Conditions for Setting the DTC

- Ignition SW is ON.
- The Tp sensor voltage reading is below 100m volts.
- Above conditions present for at least 1 second.

Action Taken When the DTC Sets

- The ECM will illuminate the malfunction indicator lamp (MIL) the first time the fault is detected.
- The ECM will store conditions which were present when the DTC was set as Freeze Frame and in the Failure Records data.
- The ECM will use a default throttle position based on mass air flow and RPM.

Conditions for Clearing the MIL/DTC

- The ECM will turn the MIL “OFF” on the third consecutive trip cycle during which the diagnostic has been run and the fault condition is no longer present.
- A history DTC P0122 will clear after 40 consecutive warm-up cycles have occurred without a fault.
- DTC P0122 can be cleared by using the Tech 2 “Clear Info” function or by disconnecting the ECM battery feed.

Diagnostic Aids

Check for the following conditions:

- Poor connection at ECM – Inspect harness connectors for backed-out terminals, improper mating, broken locks, improperly formed or damaged terminals, and poor terminal-to-wire connection.
- Damaged harness – Inspect the wiring harness for damage. If the harness appears to be OK, observe the throttle position display on the Tech 2 while moving connectors and wiring harnesses related to the TP sensor. A change in the display will indicate the location of the fault.

If DTC P0122 cannot be duplicated, the information included in the Failure Records data can be useful in determining vehicle mileage since the DTC was last set.

DTC P0122 –TP Sensor Circuit Low Voltage

Step	Action	Value(s)	Yes	No
1	Was the “On-Board Diagnostic (OBD) System Check” performed?	—	Go to *Step 2*	Go to *OBD System Check*
2	1. Ignition “ON,” engine “OFF.” 2. With the throttle closed, observe the “TP Sensor” display on the Tech 2. Is the “TP Sensor” below the specified value?	0.22 V	Go to *Step 4*	Go to *Step 3*
3	1. Ignition “ON,” engine “OFF.” 2. Review and record Tech 2 Failure Records data. 3. Operate the vehicle within Failure Records conditions as noted. 4. Using a Tech 2, monitor the “Specific DTC” info for DTC P0122. Does the Tech 2 indicate DTC P0122 failed?	—	Go to *Step 4*	Refer to *Diagnostic Aids*
4	1. Ignition “OFF.” 2. Disconnect the TP sensor electrical connector. 3. Jumper the 5 volt reference “A” circuit and the TP signal together at the TP sensor harness connector. 4. Ignition “ON.” Observe the “TP Sensor” display on the Tech 2. Is the “TP Sensor” at the specified value?	5 V	Go to *Step 10*	Go to *Step 5*
5	1. Disconnect jumper. 2. Connect a test light between B+ and the TP sensor signal circuit at the TP sensor harness connector. Observe the “TP Sensor” display on the Tech 2. Is the “TP Sensor” at the specified value?	5 V	Go to *Step 6*	Go to *Step 8*
6	1. Ignition “OFF.” 2. Disconnect the ECM and check the 5 volt reference “A” circuit for an open or short to ground. 3. If the 5 volt reference “A” circuit is open or shorted to ground, repair it as necessary. Was the 5 volt reference “A” circuit open or shorted to ground?	—	Verify repair	Go to *Step 7*
7	Check the 5 volt reference “A” circuit for a poor connection at the ECM and replace the terminal if necessary. Did the terminal require replacement?	—	Verify repair	Go to *Step 12*
8	1. Ignition “OFF.” 2. Disconnect the ECM, and check the TP signal circuit for an open, short to ground, or short to the sensor ground circuit. 3. If the TP sensor signal circuit is open or shorted to ground, repair it as necessary. Was the TP signal circuit open or shorted to ground?	—	Verify repair	Go to *Step 9*
9	Check the TP sensor signal circuit for a poor connection at the ECM and replace the terminal if necessary. Did the terminal require replacement?	—	Verify repair	Go to *Step 12*

DTC P0122 –TP Sensor Circuit Low Voltage (Cont'd)

Step	Action	Value(s)	Yes	No
10	Check the TP sensor signal circuit for a poor connection at the TP sensor and replace the terminal if necessary. Did the terminal require replacement?	—	Verify repair	Go to *Step 11*
11	Replace the TP sensor. Is the action complete?	—	Verify repair	—
12	Replace the ECM. Is the action complete?	—	Verify repair	—

Diagnostic Trouble Code (DTC) P0123 (Flash DTC=21) TP Sensor Circuit High Voltage

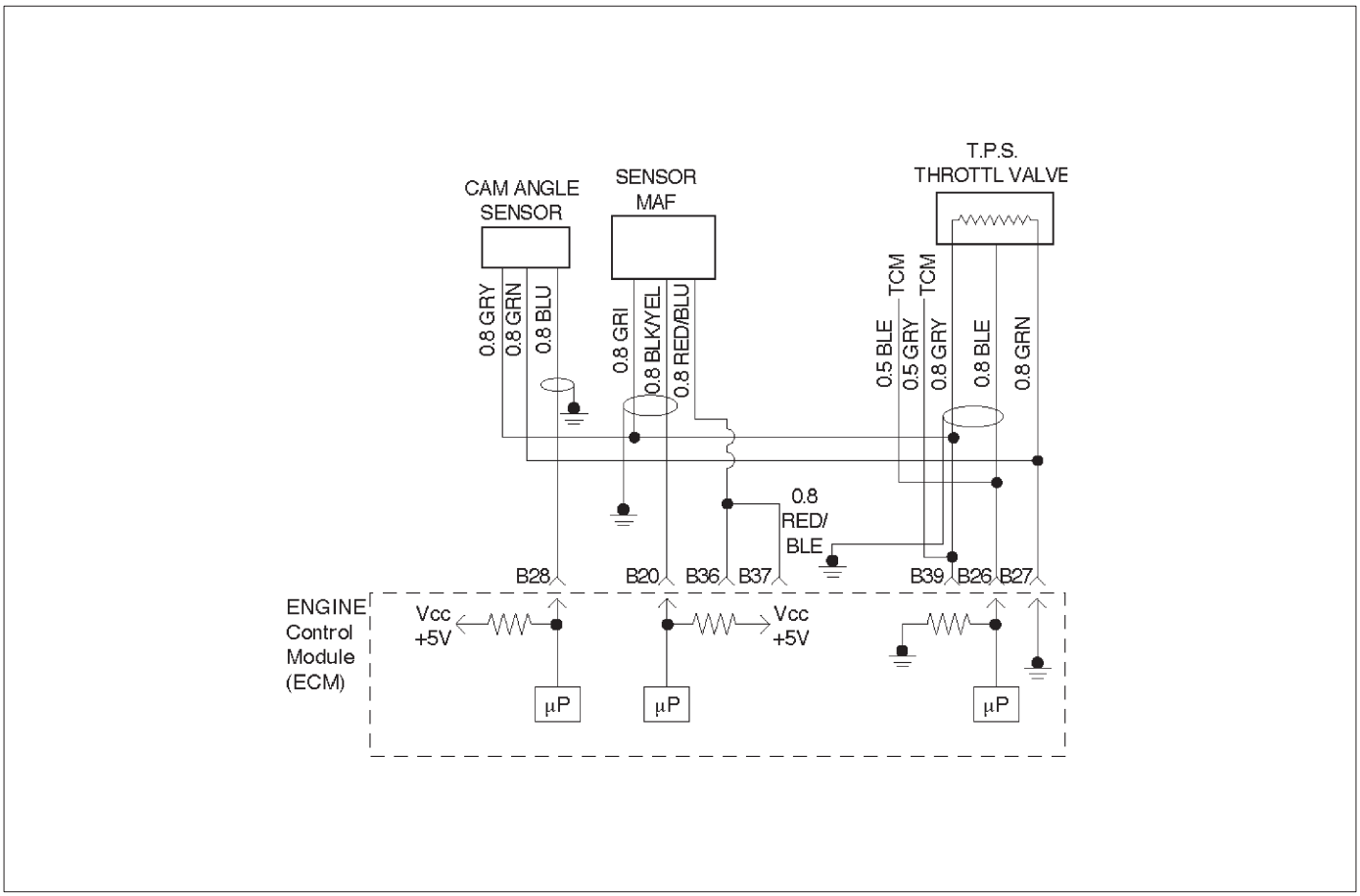

060RW077

Circuit Description

The throttle position (TP) sensor circuit provides a voltage signal that changes relative to throttle blade angle. The signal voltage will vary from about 0.6 volts at closed throttle to about 4.5 volts at wide open throttle (WOT). The TP signal is one of the most important inputs used by the Engine Control Module ECM for fuel control and many of the ECM-controlled outputs.

Conditions for Setting the DTC

- Ignition SW is ON.
- The TP sensor voltage more than 4800m volts.
- Above conditions present for at least 960m second.

Action Taken When the DTC Sets

- The ECM will illuminate the malfunction indicator lamp (MIL) the first time the fault is detected.
- The ECM will store conditions which were present when the DTC was set as Freeze Frame and in the Failure Records data.
- The ECM will use a default throttle position based on mass air flow and RPM.

Conditions for Clearing the MIL/DTC

- The ECM will turn the MIL “OFF” on the third consecutive trip cycle during which the diagnostic has been run and the fault condition is no longer present.
- A history DTC P0123 will clear after 40 consecutive warm-up cycles have occurred without a fault.
- DTC P0123 can be cleared by using the Tech 2 “Clear Info” function or by disconnecting the ECM battery feed.

Diagnostic Aids

Check for the following conditions:

- Poor connection at ECM – Inspect harness connectors for backed-out terminals, improper mating, broken locks, improperly formed or damaged terminals, and poor terminal-to-wire connection.
- Damaged harness – Inspect the wiring harness for damage. If the harness appears to be OK, observe the TP sensor display on the Tech 2 while moving connectors and wiring harnesses related to the TP sensor. A change in the display will indicate the location of the fault.
- Faulty TP sensor – With the ignition key “ON,” engine “OFF,” observe the TP sensor display on the Tech 2 while slowly depressing the accelerator to wide open throttle. If a voltage over 4.88 volts is seen at any point in normal accelerator travel, replace the TP sensor.

If DTC P0123 cannot be duplicated, the information included in the Failure Records data can be useful in determining vehicle mileage since the DTC was last set.

Test Description

Number (s) below refer to the step number(s) on the Diagnostic Chart.

7. Components that share the TP sensor 5 volt reference "A" circuit include the following device:

DTC P0123 – TP Sensor Circuit High Voltage

Step	Action	Value(s)	Yes	No
1	Was the "On-Board Diagnostic (OBD) System Check" performed?	—	Go to *Step 2*	Go to *OBD System Check*
2	1. Ignition "ON," engine "OFF." 2. With the throttle closed, observe the "TP Sensor" display on the Tech 2. Is the "TP Sensor" above the specified value?	4.88 V	Go to *Step 4*	Go to *Step 3*
3	1. Ignition "ON," engine "OFF." 2. Review and record Tech 2 Failure Records data. 3. Operate the vehicle within Failure Records conditions as noted. 4. Using a Tech 2, monitor "Specific DTC" info for DTC P0123. Does the Tech 2 indicate DTC P0123 failed.	—	Go to *Step 4*	Refer to *Diagnostic Aids*
4	1. Disconnect the TP sensor electrical connector. 2. Observe the "TP Sensor" display on the Tech 2. Is the "TP Sensor" near the specified value?	0 V	Go to *Step 5*	Go to *Step 6*
5	Probe the sensor ground circuit at the TP sensor harness connector with a test light connected to B+. Is the test light "ON?"	—	Go to *Step 7*	Go to *Step 10*
6	1. Ignition "OFF," disconnect the ECM. 2. Ignition "ON," engine "OFF." 3. Check for a short to voltage on the TP sensor signal circuit. 4. If the TP sensor signal circuit is shorted, repair it as necessary. Was the TP sensor signal circuit shorted?	—	Verify repair	Go to *Step 12*
7	1. Ignition "ON." 2. Monitor the "TP Sensor" Tech 2 display while disconnecting each of the components that share the 5 volt reference "A" circuit (one at a time). 3. If the "TP Sensor" Tech 2 display changes, replace the component that caused the display to change when disconnected. Does disconnecting any of these components cause the "TP Sensor" display to change?	—	Verify repair	Go to *Step 8*
8	1. Ignition "OFF," disconnect the ECM. 2. Ignition "ON," engine "OFF." 3. Check for a short to B+ on the 5 volt reference "A" circuit. 4. If the 5 volt reference "A" circuit is shorted, repair it as necessary. Was the 5 volt reference "A" circuit shorted?	—	Verify repair	Go to *Step 9*
9	Check for poor electrical connections at the TP sensor and replace terminals if necessary. Did any terminals require replacement?	—	Verify repair	Go to *Step 11*

DTC P0123 – TP Sensor Circuit High Voltage (Cont'd)

Step	Action	Value(s)	Yes	No
10	1. Ignition "OFF." 2. Disconnect the ECM, and check for an open sensor ground circuit to the TP sensor. 3. If a problem is found, repair it as necessary. Was the sensor ground circuit to the TP sensor open?	—	Verify repair	Go to *Step 12*
11	Replace the TP sensor. Is the action complete?	—	Verify repair	—
12	Replace the ECM. Is the action complete?	—	Verify repair	—

Diagnostic Trouble Code (DTC) P0131 (Flash DTC=15) HO2S Circuit Low Voltage

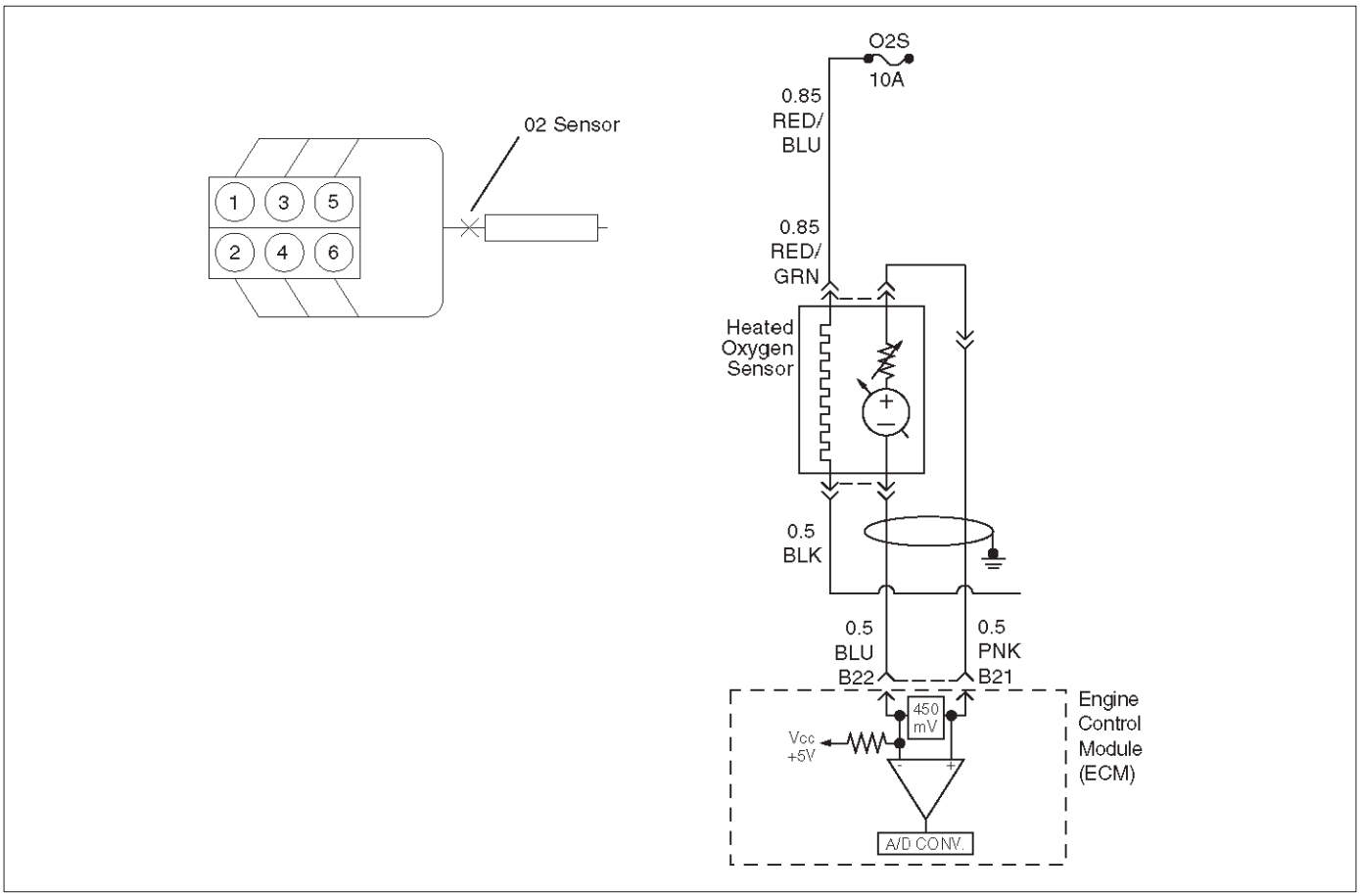

Circuit Description

The Engine Control Module ECM supplies a bias voltage of about 450 mV between the heated oxygen sensor (HO2S) signal high and signal low circuits. When measured with a 10 megaohm digital voltmeter, this may display as low as 350 mV. The oxygen sensor varies the voltage within a range of about 1000 mV when the exhaust is rich, down through about 10 mV when exhaust is lean. The ECM constantly monitors the HO2S signal during “closed loop” operation and compensates for a rich or lean condition by decreasing or increasing injector pulse width as necessary. If HO2S voltage remains excessively low for an extended period of time, DTC P0131 will be set.

Conditions for Setting the DTC

- No related DTCs.
- Vehicle is operating in “closed loop.”
- Engine coolant temperature is between 70˚C and 110˚C.
- Throttle angle is between 3% and 19%.
- Vehicle speed is between 0Km/H and 120Km/H.
- Throttle angle voltage change reading is below 0.3m volts.
- The O^2 sensor voltage more than 400m volts for 50 second.

Action Taken When the DTC Sets

- The ECM will illuminate the malfunction indicator lamp (MIL) the first time the fault is detected.
- The ECM will store conditions which were present when the DTC was set as Freeze Frame and in the Failure Records data.
- “Open loop” fuel control will be in effect.

Conditions for Clearing the MIL/DTC

- The ECM will turn the MIL “OFF” on the third consecutive trip cycle during which the diagnostic has been run and the fault condition is no longer present.
- A history DTC P0131 will clear after 40 consecutive warm-up cycles have occurred without a fault.
- DTC P0131 can be cleared by using the Tech 2 “Clear Info” function or by disconnecting the ECM battery feed.

Diagnostic Aids

Check for the following conditions:

- Heated oxygen sensor wiring – The sensor pigtail may be routed incorrectly and contacting the exhaust system.
- Poor ECM to engine block grounds.
- Fuel pressure – The system will go lean if pressure is too low. The ECM can compensate for some decrease. However, If fuel pressure is too low, a DTC P0131 may be set. Refer to *Fuel System Diagnosis*.
- Lean injector(s) – Perform “Injector Balance Test.”

- Exhaust leaks – An exhaust leak may cause outside air to be pulled into the exhaust gas stream past the HO2S, causing the system to appear lean. Check for exhaust leaks that may cause a false lean condition to be indicated.
- MAF sensor – The system can go lean if the MAF sensor signal indicates an engine airflow measurement that is not correct. Disconnect the MAF sensor to see if the lean condition is corrected. If so, replace the MAF sensor.
- Fuel contamination – Water, even in small amounts, can be delivered to the fuel injectors. The water can cause a lean exhaust to be indicated. Excessive alcohol in the fuel can also cause this condition. Refer to *Fuel System Diagnosis* for the procedure to check for fuel contamination.
- If none of the above conditions are present, replace the affected HO2S.

Test Description

Number(s) below refer to step numbers on the diagnostic chart.

3. DTC P0131 failing during operation may indicate a condition described in the “Diagnostic Aids” above. If the DTC P0131 test passes while the Failure Records conditions are being duplicated, an intermittent condition is indicated.

Reviewing the Failure Records vehicle mileage since the diagnostic test last failed may help determine how often the condition that caused the DTC to be set occurs. This may assist in diagnosing the condition.

DTC P0131 –HO2S Circuit Low Voltage Bank 1 Sensor 1

Step	Action	Value(s)	Yes	No
1	Was the “On-Board Diagnostic (OBD) System Check” performed?	—	Go to *Step 2*	Go to *OBD System Check*
2	1. Install the Tech 2. 2. Run the engine at operating temperature. 3. Operate the vehicle within the parameters specified under “Conditions for Setting the DTC” criteria included in Diagnostic Support. 4. Using a Tech 2, monitor HO2S voltage. Does the HO2S voltage remain below the specified value?	22 mV	Go to *Step 4*	Go to *Step 3*
3	1. Ignition “ON,” engine “OFF,” review and record Tech 2 Failure Records data and note parameters. 2. Operate the vehicle within Failure Records conditions as noted. 3. Using a Tech 2, monitor “DTC” info for DTC P0131 until the DTC P0131 test runs. Note test result. Does Tech 2 indicate DTC P0131 failed this ignition?	—	Go to *Step 4*	Refer to *Diagnostic Aids*
4	1. Turn the ignition “OFF.” 2. Disconnect the ECM. 3. Check the HO2S high and low circuits for a short to ground or a short to the heater ground circuit. Are the HO2S signal circuits shorted to ground?	—	Go to *Step 5*	Go to *Step 6*
5	Repair the Bank 1 HO2S 1 signal circuit. Is the action complete?	—	Verify repair	—
6	1. Turn the ignition “OFF,” HO2S and ECM disconnected. 2. Check for continuity between the high and low signal circuits. Was there continuity between the high and low circuits?	—	Go to *Step 7*	Go to *Step 8*
7	Repair the short between the high and low circuits. Is the action complete?	—	Verify repair	—
8	1. Ignition “OFF.” 2. Reconnect the ECM, leave the sensor disconnected. 3. Ignition “ON.” Does the Tech 2 indicate HO2S voltage between the specified values?	425–475 mV	Refer to *Diagnostic Aids*	Go to *Step 9*
9	Replace the ECM. Is the action complete?	—	Verify repair	—

Diagnostic Trouble Code (DTC) P0132 (Flash DTC) HO2S Circuit High Voltage

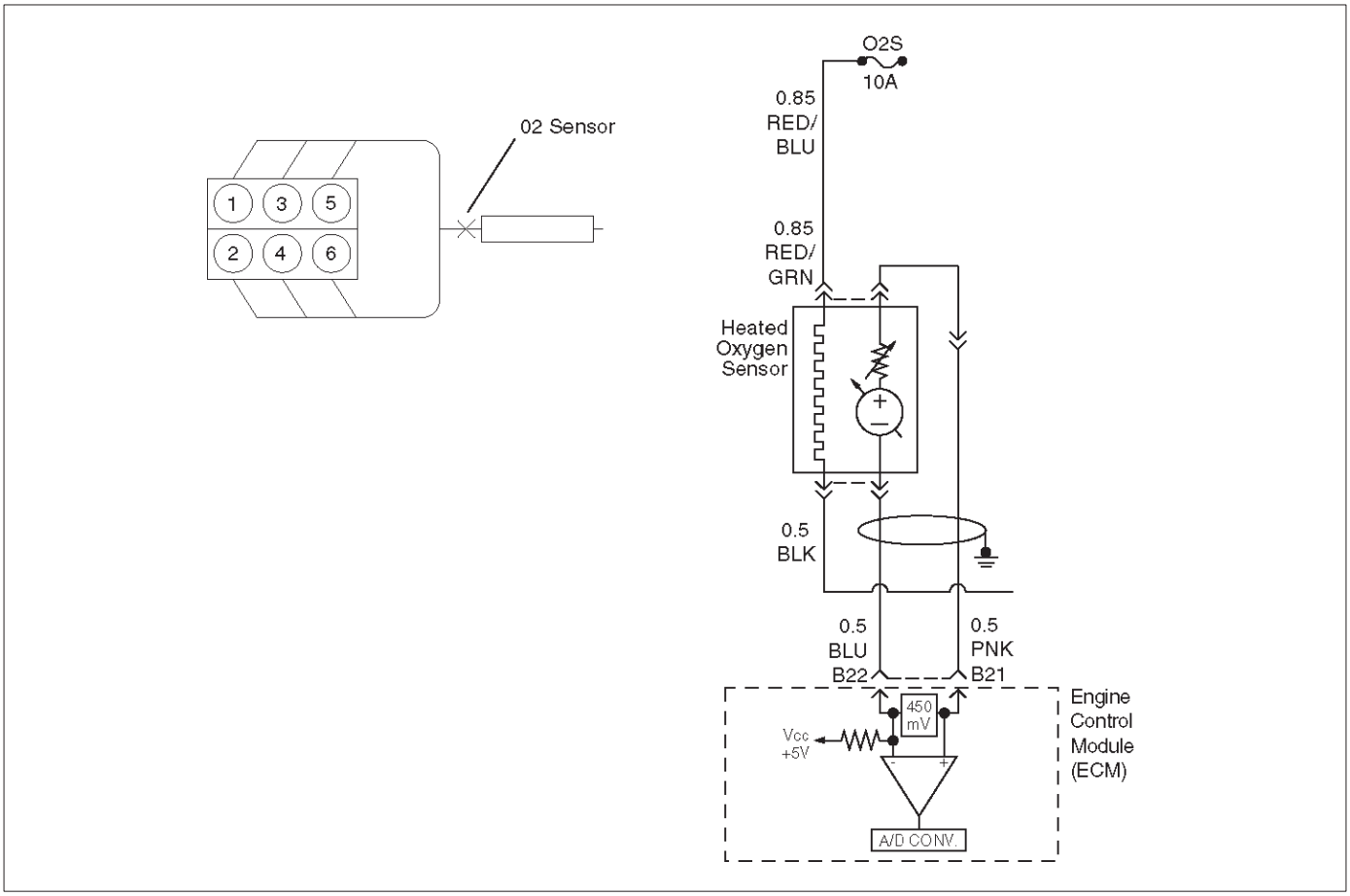

060RW054

Circuit Description

The Engine Control Module ECM supplies a bias voltage of about 450 mV between the heated oxygen sensor (HO2S) signal high and signal low circuits. When measured with a 10 megaohm digital voltmeter, this may display as low as 320 mV. The oxygen sensor varies the voltage within a range of about 1000 mV when the exhaust is rich, down through about 10 mV when exhaust is lean. The ECM constantly monitors the HO2S signal during "closed loop" operation and compensates for a rich or lean condition by decreasing or increasing injector pulse width as necessary. If the HO2S voltage remains excessively high for an extended period of time, DTC P0132 will be set.

Conditions for Setting the DTC

- No related DTCs.
- Engine coolant temperature is between 70˚C and 110˚C.
- "Closed loop" commanded air/fuel ratio is between 14.5 and 14.8.
- Throttle angle is between 3% and 19%.
- Vehicle speed is between 0Km/H and 120Km/H.
- The O^2 sensor voltage reading is below 600m volts for 50 second.

Action Taken When the DTC Sets

- The ECM will illuminate the malfunction indicator lamp (MIL) the first time the fault is detected.
- The ECM will store conditions which were present when the DTC was set as Freeze Frame and in the Failure Records data.
- "Open loop" fuel control will be in effect.

Conditions for Clearing the MIL/DTC

- The ECM will turn the MIL "OFF" on the third consecutive trip cycle during which the diagnostic has been run and the fault condition is no longer present.
- A history DTC P0132 will clear after 40 consecutive warm-up cycles have occurred without a fault.
- DTC P0132 can be cleared by using the Tech 2 "Clear Info" function or by disconnecting the ECM battery feed.

Diagnostic Aids

Check the following items:

- Fuel pressure – The system will go rich if pressure is too high. The ECM can compensate for some increase. However, if fuel pressure is too high, a DTC P0132 may be set. Refer to *Fuel System Diagnosis*.
- Perform "Injector Balance Test" – Refer to *Fuel System Diagnosis*.
- Check the canister for fuel saturation – If full of fuel, check canister control and hoses.
- MAF sensor –The system can go rich if MAF sensor signal indicates an engine airflow measurement that is not correct. Disconnect the MAF sensor to see it the rich condition is corrected. If so, replace the MAF sensor.

- Check for a leak in the fuel pressure regulator diaphragm by checking the vacuum line to the regulator for the presence of fuel. There should be no fuel in the vacuum line.
- An intermittent TP sensor output will cause the system to go rich due to a false indication of the engine accelerating.
- Shorted Heated Oxygen Sensor (HO2S) –If the HO2S is internally shorted, the HO2S voltage displayed on the Tech 2 will be over 1 volt. Try disconnecting the affected HO2S with the key “ON,” engine “OFF.” If the displayed HO2S voltage changes from over 1000 mV to around 450 mV, replace the HO2S. Silicon contamination of the HO2S can also cause a high HO2S voltage to be indicated. This condition is indicated by a powdery white deposit on the portion of the HO2S exposed to the exhaust stream. If contamination is noticed, replace the affected HO2S.
- Open HO2S Signal Circuit or Faulty HO2S–A poor connection or open in the HO2S signal circuit can cause the DTC to set during deceleration fuel mode. An HO2S which is faulty and not allowing a full voltage swing between the rich and lean thresholds can also cause this condition. Operate the vehicle by monitoring the HO2S voltage with a Tech 2. If the HO2S voltage is limited within a range between 300 mV to 600 mV, check the HO2S signal circuit wiring and associated terminal conditions.
- If none of the above conditions are present, replace the affected HO2S.

Test Description

Number(s) below refer to the step number(s) on the Diagnostic Chart.

3. DTC P0132 failing during “deceleration fuel cutoff mode” operation may indicate a condition described in the “Diagnostic Aids” above. If the DTC P0132 test passes while the Failure Records conditions are being duplicated, an intermittent condition is indicated.

Reviewing the Failure Records vehicle mileage since the diagnostic test last failed may help determine how often the condition that caused the DTC to be set occurs. This may assist in diagnosing the condition.

DTC P0132 – HO2S Circuit High Voltage

Step	Action	Value(s)	Yes	No
1	Was the “On-Board Diagnostic (OBD) System Check” performed?	—	Go to *Step 2*	Go to *OBD System Check*
2	1. Install the Tech 2. 2. Run the engine at operating temperature. 3. Operate the vehicle within parameters specified under “Conditions for Setting the DTC” included in Diagnostic Support. 4. Using a Tech 2, monitor HO2S voltage. Does the HO2S voltage remain above the specified value?	952 mV (500 mV in deceleration fuel cutoff mode)	Go to *Step 4*	Go to *Step 3*
3	1. Ignition “ON,” review and record Tech 2 Failure Records data. 2. Operate the vehicle within Failure Records conditions as noted. 3. Using a Tech 2, monitor “DTC” info for DTC P0132 until the DTC P0132 test runs. 4. Note the test result. Does the Tech 2 indicate DTC P0132 failed this ignition?	—	Go to *Step 4*	Refer to *Diagnostic Aids*
4	1. Ignition “OFF.” 2. Disconnect HO2S. 3. Ignition “ON.” 4. At HO2S Sensor connector (ECM side) use a DVM to measure voltages at the high and low signal terminals. Are the voltages in the specified range?	3-4 V	Go to *Step 5*	Go to *Step 6*
5	Repair short to voltage in signal circuit. Is the action complete?	—	Verify repair	—
6	1. Ignition “ON,” engine“OFF.” 2. At HO2S connector (ECM side) jumper both the HO2S high and low signal circuits (ECM side) to ground. 3. Using a Tech 2, monitor HO2S voltage. Is HO2S voltage below the specified value?	10 mV	Go to *Step 7*	Go to *Step 8*
7	1. Disconnect the jumpers to ground from HO2S ECM-side connector. 2. With the HO2S connector disconnected, monitor HO2S voltage. Is HO2S voltage between the specified values?	425-475 mV	Refer to *Diagnostic Aids*	Go to *Step 8*
8	Replace the ECM. Is the action complete?	—	Verify repair	—

Diagnostic Trouble Code (DTC) P0134 (Flash DTC=15) HO2S Circuit Insufficient Activity

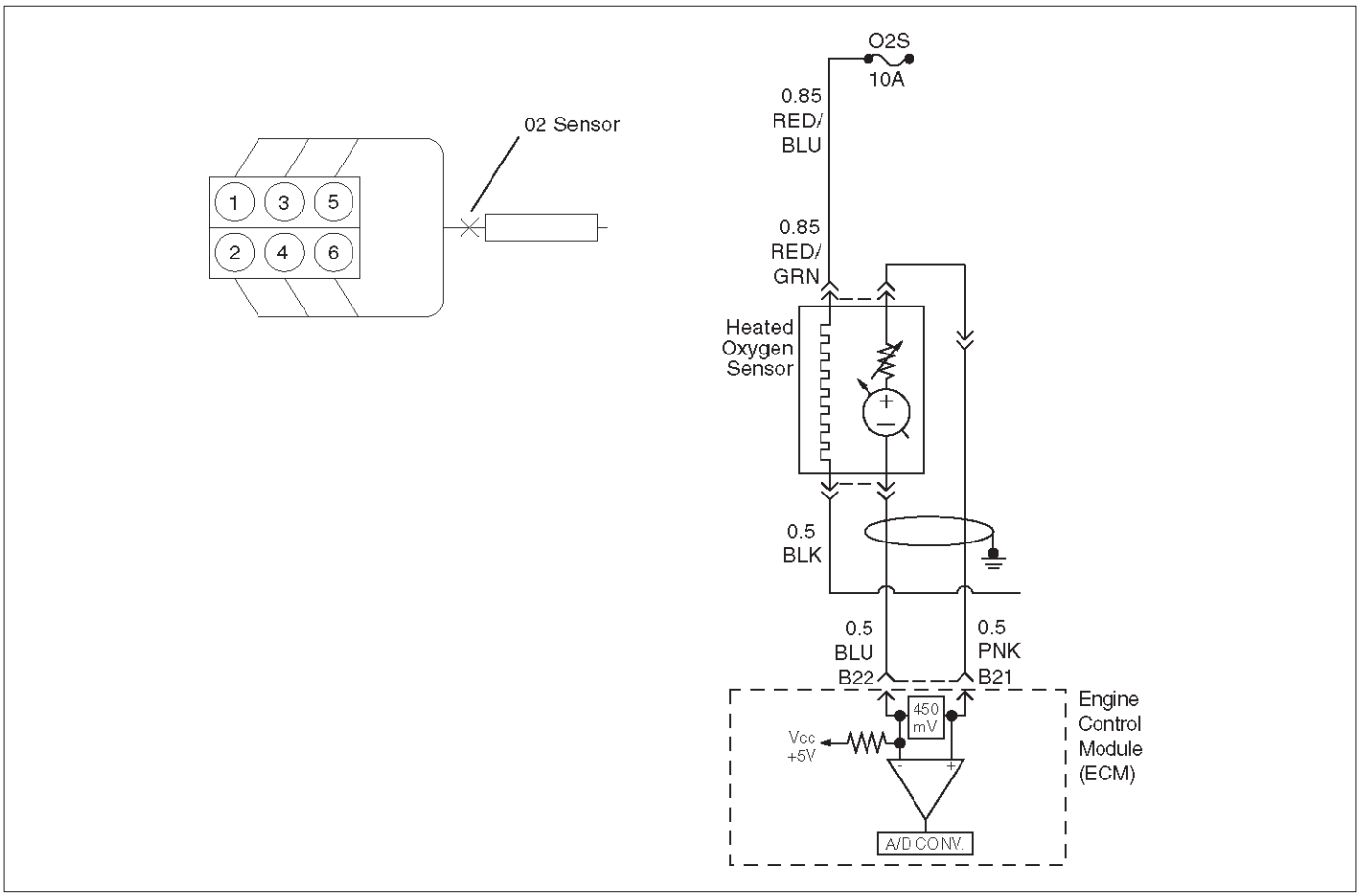

Circuit Description

- The Engine Control Module ECM supplies a bias voltage of about 450 mV between the heated oxygen sensor (HO2S) high and low circuits. When measured with a 10 megaohm digital voltmeter, this may display as low as 320 mV. The oxygen sensor varies the voltage within a range of about 1000 mV when the exhaust is rich, down through about 10 mV when exhaust is lean. The ECM constantly monitors the HO2S signal during “closed loop” operation and compensates for a rich or lean condition by decreasing or increasing injector pulse width as necessary. If the Bank 1 HO2S 1 voltage remains at or near the 450 mV bias for an extended period of time, DTC P0134 will be set, indicating an open sensor signal or sensor low circuit.

Conditions for Setting the DTC

- No related DTCs.
- Engine run time is longer than 2 seconds.
- Vehicle speed more than 60 Km/H.
- ECT reading more than 70˚C.
- The O^2 sensor voltage is between 350m volts and 600m volts.
- Above conditions present for at least second.

Action Take When the DTC Sets

- The ECM will illuminate the malfunction indicator lamp (MIL) the first time the fault is detected.
- The ECM will store conditions which were present when the DTC was set as Freeze Frame and in the Failure Records data.
- “Open loop” fuel control will be in effect.

Conditions for Clearing the MIL/DTC

- The ECM will turn the MIL “OFF” on the third consecutive trip cycle during which the diagnostic has been run and the fault condition is no longer present.
- A history DTC P0134 will clear after 40 consecutive warm-up cycles have occurred without a fault.
- DTC P0134 can be cleared by using the Tech 2 “Clear Info” function or by disconnecting the ECM battery feed.

Diagnostic Aids

Check for the following conditions:

- Poor connection or damaged harness – Inspect the harness connectors for backed-out terminals, improper mating, broken locks, improperly formed or damaged terminals, poor terminal-to-wire connection, and damaged harness.
- Faulty HO2S heater or heater circuit – With the ignition “ON,” engine “OFF,” after a cool down period, the HO2S 1 voltage displayed on the Tech 2 is normally 455-460 mV. A reading over 1000 mV indicates a signal line shorted to voltage. A reading under 5 mV indicates a signal line shorted to ground or signal lines shorted together. Disconnect the HO2S and connect a test light between the HO2S ignition feed and heater ground circuits. If the test light does not light for 2

seconds when the ignition is turned on, repair the open ignition feed or sensor ground circuit as necessary. If the test light lights and the HO2S signal and low circuits are OK, replace the HO2S.

- Intermittent test – With the Ignition "ON," monitor the HO2S signal voltage while moving the wiring harness and related connectors. If the fault is induced, the HO2S signal voltage will change. This may help isolate the location of the malfunction.

Test Description

Number(s) below refer to the step number(s) on the Diagnostic Chart.

3. If the DTC P0134 test passes while the Failure Records conditions are being duplicated, an intermittent condition is indicated.

Reviewing the Failure Records vehicle mileage since the diagnostic test last failed may help determine how often the condition that caused the DTC to be set occurs. This may assist in diagnosing the condition.

DTC P0134 –HO2S Circuit Insufficient Activity

Step	Action	Value(s)	Yes	No
1	Was the "On-Board Diagnostic (OBD) System Check" performed?	—	Go to *Step 2*	Go to *OBD System Check*
2	1. Install the Tech 2. 2. Run the engine at operating temperature. 3. Operate the engine above 1200 RPM for two minutes. Does the Tech 2 indicate HO2S voltage varying outside the specified values?	400-500 mV	Go to *Step 3*	Go to *Step 4*
3	1. Ignition "ON," engine "OFF," review and record Tech 2 Failure Records data and note parameters. 2. Operate the vehicle within Failure Records conditions as noted. 3. Using a Tech 2, monitor "DTC" info for DTC P0134 until the DTC P0134 test runs. 4. Note the test result. Does the Tech 2 indicate DTC P0134 failed this ignition?	—	Go to *Step 4*	Refer to *Diagnostic Aids*
4	Check for a damaged harness. Was a problem found?	—	Verify repair	Go to *Step 5*
5	Check for poor HO2S high and low circuit terminal connections at the Bank 1 HO2S 1 harness connector and replace terminal(s) if necessary. Did any terminals require replacement?	—	Verify repair	Go to *Step 6*
6	Check for poor HO2S high and low circuit terminal connections at the ECM and replace terminals if necessary. Did any terminals require replacement?	—	Verify repair	Go to *Step 7*
7	1. Ignition "OFF." 2. With the ECM disconnected, check continuity of the HO2S high circuit. 3. If the HO2S high circuit measures over 5.0 ohms, repair open or poor connection as necessary. Was a HO2S high circuit problem found and corrected?	—	Verify repair	Go to *Step 8*

DTC P0134 –HO2S Circuit Insufficient Activity (Cont'd)

Step	Action	Value(s)	Yes	No
8	1. Ignition "OFF." 2. With the ECM disconnected, check continuity of the HO2S low circuit. 3. If the HO2S low circuit measures over 5 ohms, repair open or poor connection as necessary. Was a HO2S low circuit problem found and corrected?	—	Verify repair	Go to *Step 9*
9	1. Ignition "ON," engine "OFF." 2. Disconnect HO2S and jumper the HO2S high and low circuits (ECM side) to ground. 3. Using a Tech 2, monitor Bank 1 HO2S 1 voltage. Is HO2S voltage in the specified range?	0-10 mV	Go to *Step 10*	Go to *Step 11*
10	Replace HO2S. Is the action complete?	—	Verify repair	—
11	Replace the ECM. Is the action complete?	—	Verify repair	—

Diagnostic Trouble Code (DTC) P0171 (Flash DTC=44) Fuel Trim System Too Lean

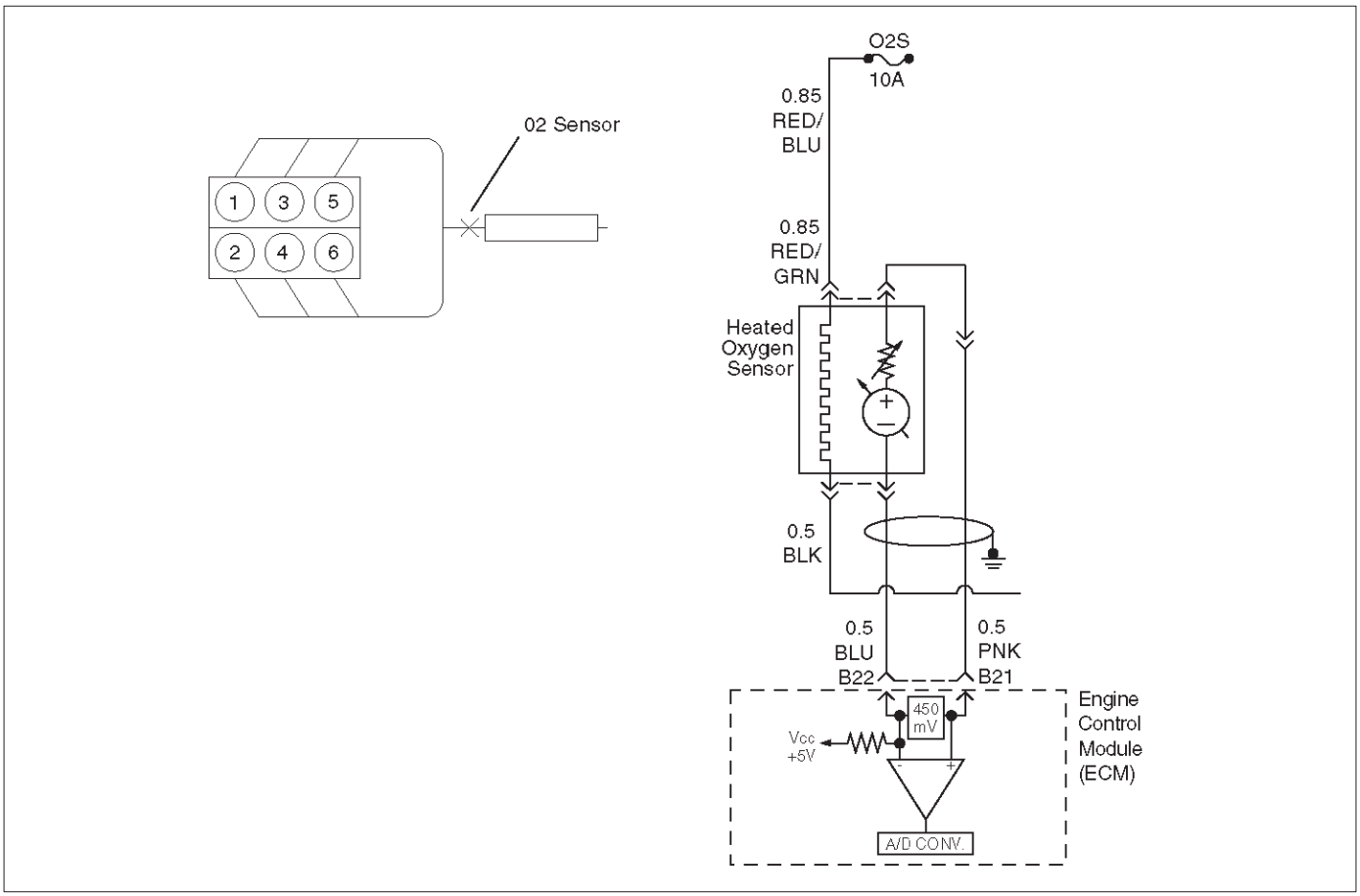

060RW054

Circuit Description

To provide the best possible combination of driveability, fuel economy, and emission control, a “closed loop” air/fuel metering system is used. While in “closed loop,” the Engine Control Module ECM monitors the HO2S signals and adjusts fuel delivery based upon the HO2S signal voltages. A change made to fuel delivery will be indicated by the long and short term fuel trim values which can be monitored with a Tech 2. Ideal fuel trim values are around 0%; if the HO2S signals are indicating a lean condition the ECM will add fuel, resulting in fuel trim values above 0%. If a rich condition is detected, the fuel trim values will be below 0%, indicating that the ECM is reducing the amount of fuel delivered. If an excessively lean condition is detected, the ECM will set DTC P0171. The ECM’s maximum authority to control long term fuel trim allows a range between –15% (automatic transmission) or –12% (manual transmission) and +20%. The ECM monitors fuel trim under various engine speed/load fuel trim cells before determining the status the fuel trim diagnostic.

Conditions for Setting the DTC

- No Tech 2 test is being run.
- Engine coolant temperature is between 35˚C and 120˚C.
- No DTCs.
- Intake air temperature is below 50˚C.
- Barometric pressure is more than 20 kpa.
- Engine speed more than 600 RPM.
- Fuel system is in “closed loop.”
- Canister purge duty cycle is greater than 0% if on.

Action Taken When the DTC Sets

- The ECM will illuminate the malfunction indicator lamp (MIL) after the second consecutive trip in which the fault is detected.
- The ECM will store conditions which were present when the DTC was set as Freeze Frame and in the Failure Records data.

Conditions for Clearing the MIL/DTC

- The ECM will turn the MIL “OFF” on the third consecutive trip cycle during which the diagnostic has been run and the fault condition is no longer present.
- A history DTC P0171 will clear after 40 consecutive warm-up cycles have occurred without a fault.
- DTC P0171 can be cleared by using the Tech 2 “Clear Info” function or by disconnecting the ECM battery feed.

Diagnostic Aids

Check for the following conditions:

- Poor connection at ECM – Inspect harness connectors for backed-out terminals, improper mating, broken

locks, improperly formed or damaged terminals, and poor terminal-to-wire connection.

- Damaged harness – Inspect the wiring harness for damage. If the harness appears to be OK, observe the HO2S display on the Tech 2 while moving connectors and wiring harnesses related to the engine harness. A change in the display will indicate the location of the fault.

Reviewing the Failure Records vehicle mileage since the diagnostic test last failed may help determine how often the condition that caused the DTC to be set occurs. This may assist in diagnosing the condition.

Test Description

Number(s) below refer to the step number(s) on the Diagnostic Chart.

2. DTCs other than P0171 may indicate a condition present which may cause a lean condition. If this is the case, repairing the condition which caused the other DTC will most likely correct the DTC P0171.

4. If the DTC P0171 test passes while the Failure Records conditions are being duplicated, the lean condition is intermittent. Refer to *Diagnostic Aids* or *Symptoms* for additional information on diagnosing intermittent problems.

DTC P0171 –Fuel Trim System Lean

Step	Action	Value(s)	Yes	No
1	Was the “On-Board Diagnostic (OBD) System Check” performed?	—	Go to *Step 2*	Go to *OBD System Check*
2	Are any DTCs set other than P0171?	—	Go to the applicable DTC charts and repair the other DTCs before proceeding with this chart	Go to *Step 3*
3	1. Start the engine and operate the vehicle in “closed loop.” 2. Observe the “Long Term Fuel Trim” display on the Tech 2. Is the displayed value greater than the specified value?	L.T. Fuel Trim: +20%	Go to *Step 5*	Go to *Step 4*
4	1. Review and record the Tech 2 Failure Records data. 2. Clear the DTC P0171 and operate the vehicle to duplicate the Failure Records conditions. 3. Monitor the Tech 2 “DTC” info for DTC P0171 while operating the vehicle to duplicate the Failure Records conditions. 4. Continue operating the vehicle until the DTC P0171 test runs and note the test result. Does the Tech 2 indicate DTC P0171 failed this ignition?	—	Go to *Step 5*	The lean condition is not present. If a driveability symptom still exists, refer to *Symptoms* section.
5	Was DTC oter than DTC P0171 also set?	—	Go to *Step 6*	Go to *Step 15*
6	Visually and physically inspect the vacuum hoses for disconnects, splits, kinks, improper routing and improper connections and repair any problem found. Did your inspection reveal a problem requiring repair?	—	Verify repair	Go to *Step 7*
7	Visually and physically inspect the crankcase ventilation valve for proper installation and repair any problem found (refer to *Crankcase Ventilation System*). Did your inspection reveal a problem requiring repair?	—	Verify repair	Go to *Step 8*
8	1. Inspect the MAF sensor inlet screen for damage or for the presence of foreign objects which may partially block the air flow sample through the MAF sensor. 2. Correct any problem that is found as necessary. Did your inspection of the MAF sensor reveal a condition requiring repair?	—	Verify repair	Go to *Step 9*
9	Start the engine and note the idle quality. Is a high or unsteady idle being experienced?	—	Go to *Step 10*	Go to *Step11*
10	1. Visually and physically inspect the throttle body, intake manifold for vacuum leaks. 2. Repair any vacuum leaks as necessary. Did your inspection reveal a vacuum leak?	—	Verify repair	Go to *Step 11*

DTC P0171 –Fuel Trim System Lean (Cont'd)

Step	Action	Value(s)	Yes	No
11	Check the fuel for excessive water, alcohol, or other contaminants (see *Diagnosis* in *Engine Fuel* for the procedure) and correct the contaminated fuel condition if present (see *Engine Fuel*). Was the fuel contaminated?	—	Verify repair	Go to *Step 12*
12	1. Visually and physically inspect the ECM injector grounds, power grounds and sensor grounds to ensure that they are clean, tight, and in their proper locations. 2. If a faulty ground condition is present, correct it as necessary. Did your inspection reveal a condition requiring repair?	—	Verify repair	Go to *Step 13*
13	1. Disconnect the MAF sensor electrical connector. 2. Operate the vehicle in "closed loop" while monitoring the "B1 Long Term Fuel Trim" displayed on the Tech 2. Does "BANK 1 S.T. FUEL TRIM" value decrease to near the specified value?	0%	Go to *Step 19*	Go to *Step 14*
14	Perform the procedure in the "Fuel System Pressure Test" and repair fuel system problem if necessary. Did Fuel System Pressure Test isolate a condition requiring repair?	—	Verify repair	Go to *Step 15*
15	Repair any problem that is found. Did your inspection reveal a problem?	—	Verify repair	Go to *Step 16*
16	Visually and physically inspect the Bank 1 exhaust manifold for leaks and loose or missing hardware and correct any problem found. Did your inspection reveal a problem?	—	Verify repair	Go to *Step 17*
17	Perform the "Injector Balance Test," and correct any problem found (refer to *Fuel Metering System*). Did Injector Balance Test isolate a problem?	—	Verify repair	Go to *Step 18*
18	1. Visually and physically inspect the HO2S to ensure that it is installed securely and that the HO2S pigtail and wiring harness are not contacting the exhaust or otherwise damaged. 2. If a problem is found, correct it as necessary. Did your inspection reveal a problem?	—	Verify repair	Refer to *Diagnostic Aids*
19	Replace the MAF sensor. Is the action complete?	—	Verify repair	—

Diagnostic Trouble Code (DTC) P0172 (Flash DTC=45) Fuel Trim System Rich

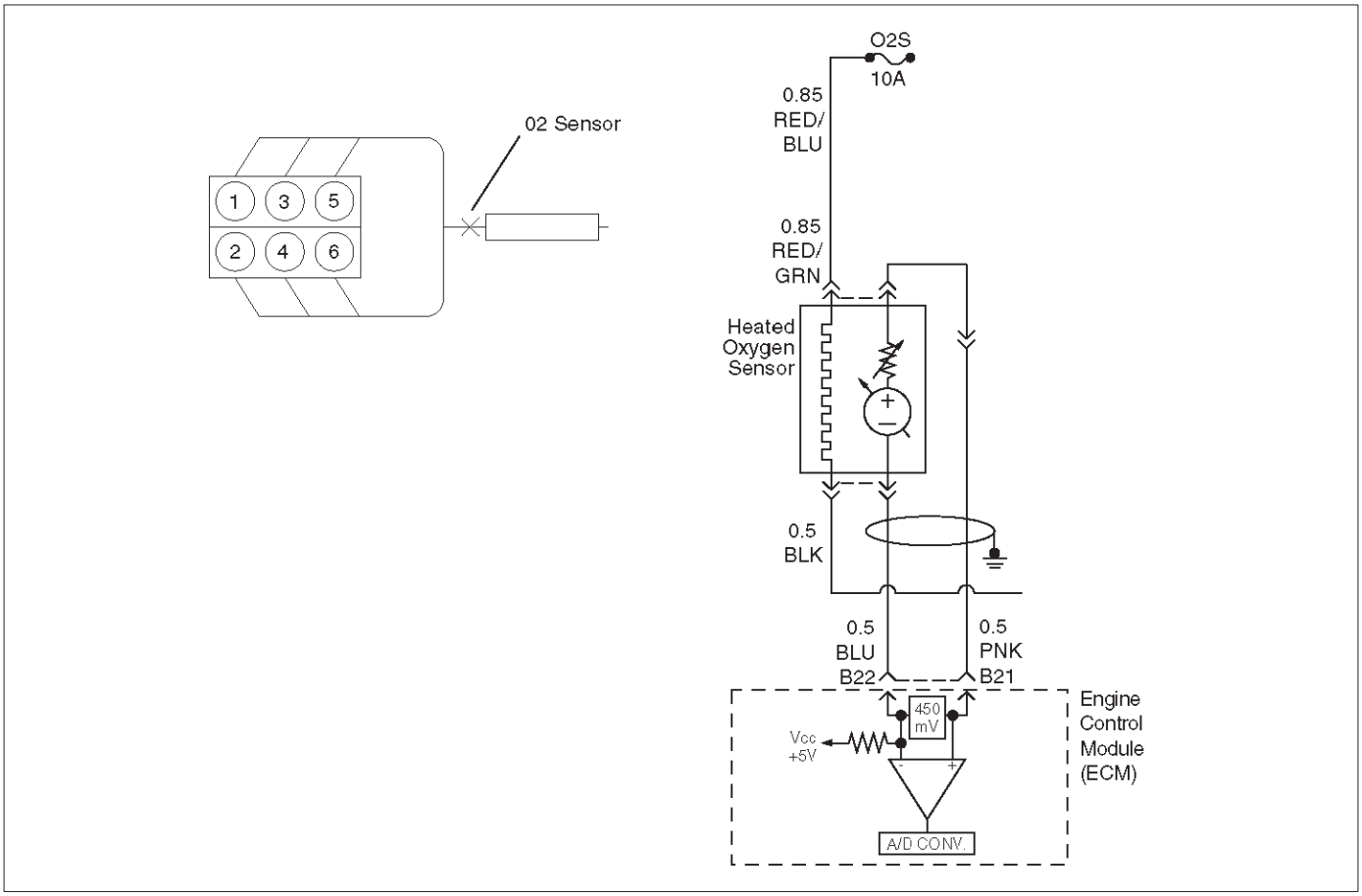

060RW054

Circuit Description

To provide the best possible combination of driveability, fuel economy, and emission control, a “closed loop” air/fuel metering system is used. While in “closed loop,” the Engine Control Module ECM monitors the heated oxygen sensors (HO2S) signals and adjusts fuel delivery based upon the HO2S signal voltages. A change made to fuel delivery will be indicated by the long and short term fuel trim values which can be monitored with a Tech 2. Ideal fuel trim values are around 0%; if the HO2S signals are indicating a lean condition the ECM will add fuel, resulting in fuel trim values above 0%. If a rich condition is detected, the fuel trim values will be below 0%, indicating that the ECM is reducing the amount of fuel delivered. If an excessively rich condition is detected on Bank 1, the ECM will set DTC P0172.

The ECM’s maximum authority to control long term fuel trim allows a range between –15% (automatic transmission) or –12 (manual transmission) and +20%. The ECM’s maximum authority to control short term fuel trim allows a range between –11% and +20%. The ECM monitors fuel trim under various engine speed/load fuel trim cells before determining the status of the fuel trim diagnostic.

Conditions for Setting the DTC

- No Tech 2 test is being run.
- None of the following was set: HO2S DTCs, (response, transition, open, low volts, no activity), MAF DTCs, TPS DTCs, BARO DTCs, IAT DTCs, canister purge DTCs, injector circuit DTCs.
- Engine coolant temperature is between 35˚C and 120˚C.
- Intake air temperature is below 50˚C.
- Barometric pressure is more than 20 kpa.
- Engine speed more than 600 RPM.
- Fuel system is in “closed loop.”
- Canister purge duty cycle is greater than 0% if on.

Action Taken When the DTC Sets

- The ECM will illuminate the malfunction indicator lamp (MIL) after the second consecutive trip in which the fault is detected.
- The ECM will store conditions which were present when the DTC was set as Freeze Frame and in the Failure Records data.

Conditions for Clearing the MIL/DTC

- The ECM will turn the MIL “OFF” on the third consecutive trip cycle during which the diagnostic has been run and the fault condition is no longer present.
- A history DTC P0172 will clear after 40 consecutive warm-up cycles have occurred without a fault.
- DTC P0172 can be cleared by using the Tech 2 “Clear Info” function or by disconnecting the ECM battery feed.

Diagnostic Aids

Check for the following conditions:

- Poor connection at ECM – Inspect harness connectors for backed-out terminals, improper mating, broken locks, improperly formed or damaged terminals, and poor terminal-to-wire connection.
- Damaged harness – Inspect the wiring harness for damage. If the harness appears to be OK, observe the HO2S display on the Tech 2 while moving connectors and wiring harnesses related to the engine harness. A change in the display will indicate the location of the fault.

Reviewing the Failure Records vehicle mileage since the diagnostic test last failed may help determine how often the condition that caused the DTC to be set occurs. This may assist in diagnosing the condition.

Test Description

Number(s) below refer to the step number(s) on the Diagnostic Chart.

2. DTCs other than P0172 may indicate a condition present which may cause a lean condition. If this is the case, repairing the condition which caused the other DTC will most likely correct the DTC P0172.

4. If the DTC P0172 test passes while the Failure Records conditions are being duplicated, the rich condition is intermittent. Refer to *Diagnostic Aids* or *Symptoms* for additional information on diagnosing intermittent problems.

DTC P0172 – Fuel Trim System Rich

Step	Action	Value(s)	Yes	No
1	Was the “On-Board Diagnostic (OBD) System Check” performed?	—	Go to *Step 2*	Go to *OBD System Check*
2	Are any DTCs set other than P0172?	—	Go to the applicable DTC charts and repair the other DTCs before proceeding with this chart	Go to *Step 3*
3	1. Start the engine and operate the vehicle in “closed loop.” 2. Observe “B1 Long Term Fuel Trim” display on the Tech 2. Is the displayed value more negative than the specified value?	L.T. Fuel Trim: –15% (auto. trans.) OR –12% (man. trans.)	Go to *Step 5*	Go to *Step 4*
4	1. Review and record the Tech 2 Failure Records data. 2. Clear the DTC P0172 and operate the vehicle to duplicate the Failure Records conditions. 3. Monitor the Tech 2 “Specific DTC” info for DTC P0172 while operating the vehicle to duplicate the Failure Records conditions. 4. Continue operating the vehicle until the DTC P0172 test runs and note test result. Does the Tech 2 indicate DTC P0172 failed this ignition?	—	Go to *Step 5*	The rich condition is not present. If a driveability symptom still exists, refer to *Symptoms*.
5	Is DTC also set?	—	Go to *Step 6*	Go to *Step 15*
6	Visually and physically inspect the air filter element and replace it if necessary. Did the air filter require replacement?	—	Verify repair	Go to *Step 7*
7	Visually and physically inspect the air intake duct for collapse or restriction and repair if necessary. Did your inspection reveal a condition requiring repair?	—	Verify repair	Go to *Step 8*

DTC P0172 – Fuel Trim System Rich (Cont'd)

Step	Action	Value(s)	Yes	No
8	Inspect the MAF sensor inlet screen for damage or for the presence of foreign objects which may partially block air flow through the screen and correct any problem found. Did your inspection of the MAF sensor reveal a condition requiring repair or replacement?	—	Verify repair	Go to *Step 9*
9	Start the engine and note the idle quality. Is a low or unsteady idle being experienced?	—	Go to *Step 10*	Go to *Step 11*
10	1. Ignition "OFF." 2. Physically inspect the throttle body bore, throttle plate, and IAC passages for coking and foreign objects. 3. If a problem was found, repair as necessary. Did your inspection reveal a condition requiring repair?	—	Verify repair	Go to *Step 11*
11	1. Disconnect the vacuum hose from the fuel pressure regulator and inspect the hose for the presence of fuel. 2. If fuel is present in the vacuum hose, replace the fuel pressure regulator (refer to *Fuel Metering System*). Did the fuel pressure regulator require replacement?	—	Verify repair	Go to *Step 12*
12	Ignition "ON," engine "OFF," monitor the TP Angle display on the Tech 2 while slowly depressing the accelerator pedal. Does the TP Angle display increase steadily and evenly from minimum value at closed throttle to maximum value at wide–open throttle?	Minimum 0% Maximum 100%	Go to *Step 13*	Go to *Step 21*
13	1. Disconnect the MAF sensor electrical connector. 2. Operate the vehicle in "closed loop" while monitoring the "Long Term Fuel Trim" and "Short Term Fuel Trim" display on the Tech 2. Did both values change to near the specified value?	0%	Go to *Step 22*	Go to *Step 14*
14	1. Perform "Fuel System Pressure Test." 2. If Fuel System Pressure Test isolates a problem, repair as necessary (refer to *Engine Fuel* or *Fuel Metering System*). Did the Fuel System Pressure Test isolate a problem requiring repair?	—	Verify repair	Go to *Step 15*
15	1. Ignition "ON," engine "OFF." 2. Connect a test light between the harness connector terminals of canister purge solenoid. Is the test light on?	—	Go to *Step 16*	Go to *Step 19*
16	Check for short to ground in the wire (red/blue) between the canister purge solenoid and ECM terminal A-15. Was there a short to ground?	—	Go to *Step 17*	Go to *Step 18*
17	Repair the short to ground. Is the action complete?	—	Verify repair	—

DTC P0172 – Fuel Trim System Rich (Cont'd)

Step	Action	Value(s)	Yes	No
18	Replace the ECM. **IMPORTANT:** The replacement ECM must be programmed. Refer to *On-Vehicle Service* in *Engine Control Module and Sensors* for procedures. Is the action complete?	—	Verify repair	—
19	1. Perform the "Injector Balance Test." 2. If Injector Balance Test isolates a problem, repair as necessary (refer to *Fuel Metering System*). Did the Injector Balance Test isolate a problem requiring repair?	—	Verify repair	Go to *Step 20*
20	1. Remove and visually/physically inspect the HO2S for silicon contamination. This will be indicated by a powdery white deposit on the portion of the HO2S that is exposed to the exhaust stream. 2. If contamination is evident on the Bank 1 HO2S 1, replace the contaminated sensors. Did the sensor require replacement?	—	Verify repair	Refer to *Diagnostic Aids*
21	1. Check the TP sensor mounting screws and tighten or replace them as necessary if they are loose or missing. 2. If the screws are OK, replace the TP sensor. Is the action complete?	—	Verify repair	—
22	Replace the MAF sensor. Is the action complete?	—	Verify repair	—

Diagnostic Trouble Code (DTC) P0201 (Flash DTC=31) Injector 1 Control Circuit

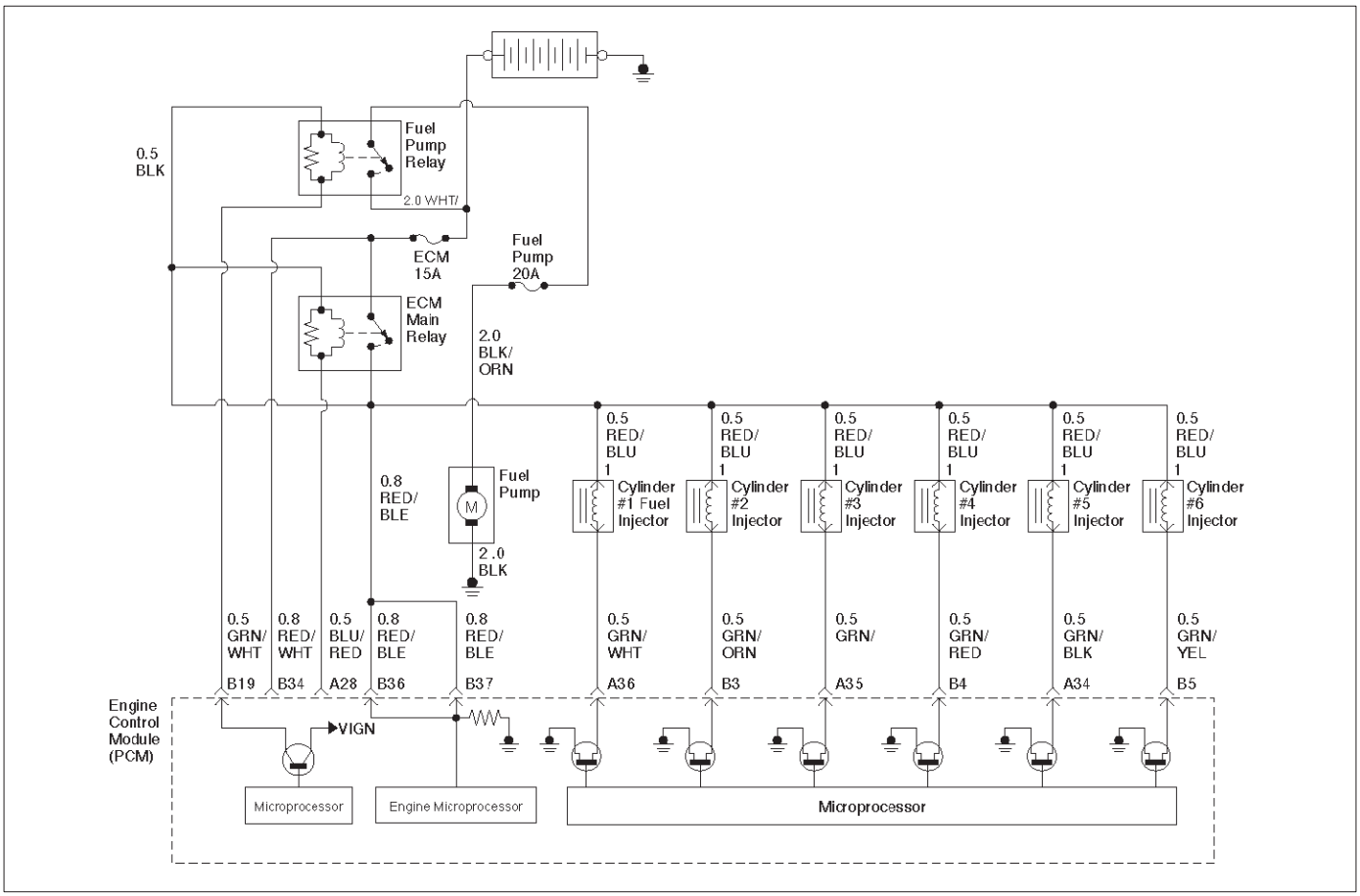

060RW055

Circuit Description

The Engine Control Module ECM has six individual injector driver circuits. Each controls an injector. When a driver circuit is grounded by the ECM, the injector is activated. The ECM monitors the current in each driver circuit. The voltage on each driver is monitored to detect a fault. If the voltage is not what the ECM expects to monitor on the circuit, a DTC is set. This DTC is also set if an injector driver is shorted to voltage or if there is an open circuit.

Conditions for Setting the DTC

- The battery voltage is more than 11 volts.
- Injector pulse reading is between 2.5m second and 7.5m second.
- No fuel cut.
- Engine running speed is between 700 r.p.m and 2000 r.p.m.
- No related CKP/CMP DTCs.
- No injector pulse reading with engine running speed is 200 r.p.m.

Action Taken When the DTC Sets

- The ECM will illuminate the malfunction indicator lamp (MIL) the first time the fault is detected.
- The ECM will store conditions which were present when the DTC was set as Freeze Frame and in the Failure Records data.

Conditions for Clearing the MIL/DTC

- The ECM will turn “OFF” the MIL on the third consecutive trip cycle in which the diagnostic has been run and the fault is no longer present.
- A history DTC P0201 will clear after 40 consecutive warm-up cycles occur without a fault.
- DTC P0201 can be cleared by using the Tech 2 “Clear Info” function or by disconnecting the ECM battery feed.

Diagnostic Aids

An injector driver circuit that is open or shorted to voltage will cause a DTC P0201 to set. It will also cause a misfire due to an inoperative injector. A misfire DTC will also be set indicating which cylinder is inoperative.

Long term and short term fuel trims that are excessively high or low are a good indication that an injector is faulty. Use Fuel Injector Coil Test Procedure to check for faulty injectors.

Test Description

The number(s) below refer to the step number(s) on the Diagnostic Chart.

3. This step determines if DTC P0201 is the result of a hard failure or an intermittent condition.

5. A special injector test connector is provided so that the injectors can be electrically tested without removal of the manifold. The special 7-way gray connector is located at the rear of the air cleaner assembly. The test connector can be identified by the blue connector lock which is tethered to the wiring harness. If the light for cylinder 1 is “ON” steady before cranking the engine as well as while cranking the engine, then the injector driver circuit is shorted to ground.

   If the test light blinks while cranking, the ECM and the wiring to the injectors are OK. The Fuel Injector Coil Test Procedure will check if the injectors are faulty.

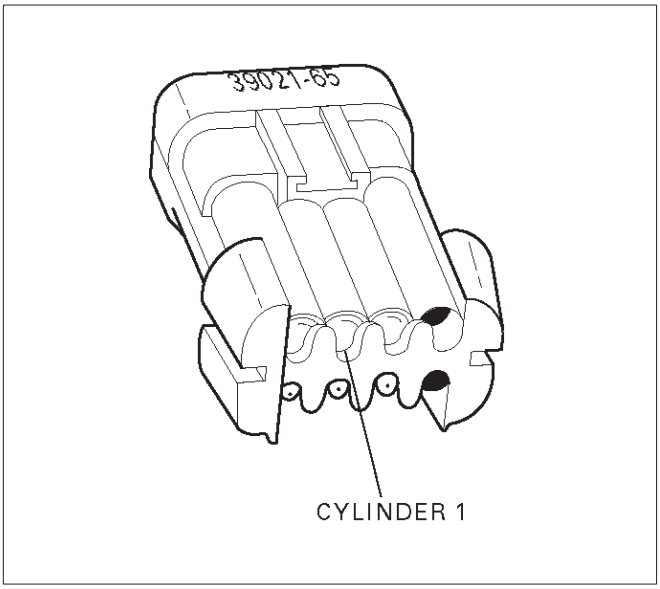

R321054

7. Because the test light was “ON” steady, voltage to the injector is OK, but the driver circuit is grounded at all times. This step determines if the circuit is shorted to ground or the ECM is faulty.

9. The reading should be about 12-14Ω.

10. Locating the open in the harness or in the injector will require removal of the manifold to provide access.

DTC P0201 – Injector 1 Control Circuit

Step	Action	Value(s)	Yes	No
1	Was the “On-Board Diagnostic (OBD) System Check” performed?	—	Go to *Step 2*	Go to *OBD System Check*
2	Will the engine start?	—	Go to *Step 3*	Go to *Engine Cranks But Will Not Run* chart
3	1. Install the Tech 2. Clear the DTC. 2. Idle the engine for one minute. Does DTC P0201 reset?	—	Go to *Step 5*	Go to *Step 4*
4	1. Review the Freeze Frame data with the ignition “ON” and the engine “OFF” and note the parameters. 2. Operate the vehicle within the Freeze Frame conditions as noted. Does P0201 reset?	—	Go to *Step 5*	Go to *Diagnostic Aids*
5	1. Engine “OFF.” 2. Disconnect the injector connector. 3. Install an injector test light 5-8840-2636-0 on the injector test connector. 4. Crank the engine and note the light. Does the injector test light blink?	—	Go to *Fuel Injector Coil Test Procedure*	Go to *Step 6*

DTC P0201 – Injector 1 Control Circuit (Cont'd)

Step	Action	Value(s)	Yes	No
6	Note whether the injector test light for cylinder 1 was "OFF" or "ON" steady in step 5. Was the test light "ON" steady while cranking the engine?	—	Go to *Step 7*	Go to *Step 9*
7	1. Disconnect the ECM connector for the affected injectors. 2. With a test light connected to B+, probe the affected injector driver circuit. Does the test light illuminate?	—	Go to *Step 8*	Go to *Step 15*
8	Repair short to ground in the injector driver circuit. Is the action complete?	—	Go to *OBD System Check*	—
9	1. Disconnect the injector test connector. 2. At the injector side of the harness, connect an ohmmeter between the positive wire (red with blue tracer) and the wire for cylinder 1 (green with white tracer). Does the ohmmeter indicate continuity?	—	Go to *Step 11*	Go to *Step 10*
10	Repair the open injector harness wire or open injector. Is the action complete?	—	Verify repair	—
11	At the ECM side of the injector test connector, check the green/white wire for a short to voltage. Was there a short to voltage?	—	Go to *Step 12*	Go to *Step 13*
12	Repair the short to voltage. Is the action complete?	—	Verify repair	—
13	Check for an open circuit between the injector test connector and the ECM. Was there an open circuit?	—	Go to *Step 14*	Go to *Step 15*
14	Repair the open circuit. Is the action complete?	—	Verify repair	—
15	Replace the ECM. Is the action complete?	—	Verify repair	—

Diagnostic Trouble Code (DTC) P0202 (Flash DTC=31) Injector 2 Control Circuit

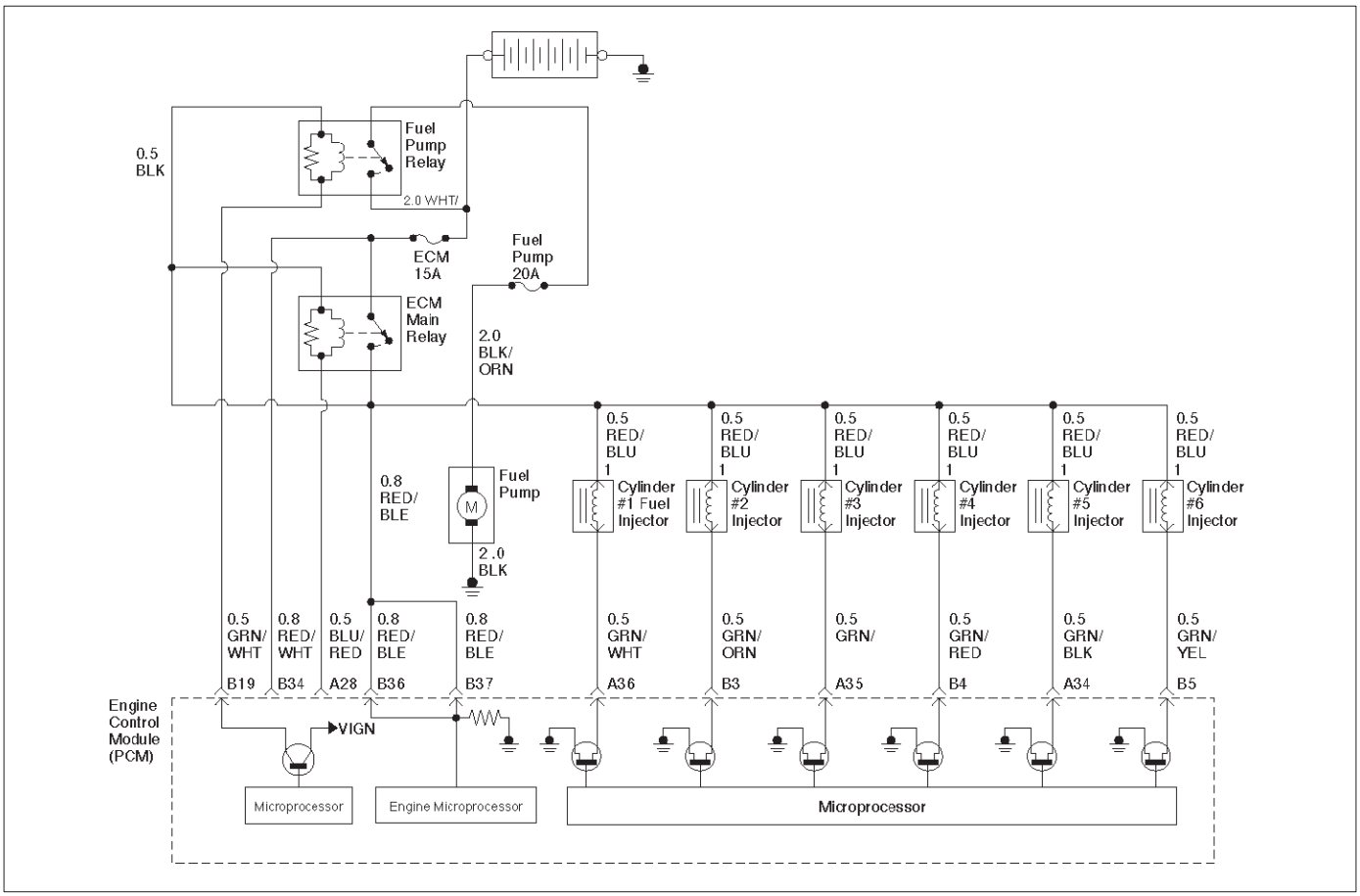

060RW055

Circuit Description

The Engine Control Module ECM has six individual injector driver circuits. Each controls an injector. When a driver circuit is grounded by the ECM, the injector is activated. The ECM monitors the current in each driver circuit. The voltage on each driver is monitored to detect a fault. If the voltage is not what the ECM expects to monitor on the circuit, a DTC is set. This DTC is also set if an injector driver is shorted to voltage or if there is an open circuit.

Conditions for Setting the DTC

- The battery voltage is more than 11 volts.
- Injector pulse reading is between 2.5m second and 7.5m second.
- No fuel cut.
- Engine running speed is between 700 r.p.m and 2000 r.p.m.
- No related CKP/CMP DTCs.
- No injector pulse reading with engine running speed is 200 r.p.m.

Action Taken When the DTC Sets

- The ECM will illuminate the malfunction indicator lamp (MIL) the first time the fault is detected.
- The ECM will store conditions which were present when the DTC was set as Freeze Frame and in the Failure Records data.

Conditions for Clearing the MIL/DTC

- The ECM will turn “OFF” the MIL on the third consecutive trip cycle in which the diagnostic has been run and the fault is no longer present.
- A history DTC P0202 will clear after 40 consecutive warm-up cycles occur without a fault.
- DTC P0202 can be cleared by using the Tech 2 “Clear Info” function or by disconnecting the ECM battery feed.

Diagnostic Aids

An injector driver circuit that is open or shorted to voltage will cause a DTC P0202 to set. It will also cause a misfire due to an inoperative injector. A misfire DTC will also be set indicating which cylinder is inoperative.

Long term and short term fuel trims that are excessively high or low are a good indication that an injector is faulty. Use Fuel Injector Coil Test Procedure to check for faulty injectors.

Test Description

The number(s) below refer to the step number(s) on the Diagnostic Chart.

3. This step determines if DTC P0202 is the result of a hard failure or an intermittent condition.

5. A special injector test connector is provided so that the injectors can be electrically tested without removal of the manifold. The special 7-way gray connector is located at the rear of the air cleaner assembly. The test connector can be identified by the blue connector lock which is tethered to the wiring harness. If the light for cylinder 2 is “ON” steady before cranking the engine as well as while cranking the engine, then the injector driver circuit is shorted to ground.

   If the test light blinks while cranking, the ECM and the wiring to the injectors are OK. Fuel Injector Coil Test Procedure will check if the injectors are faulty.

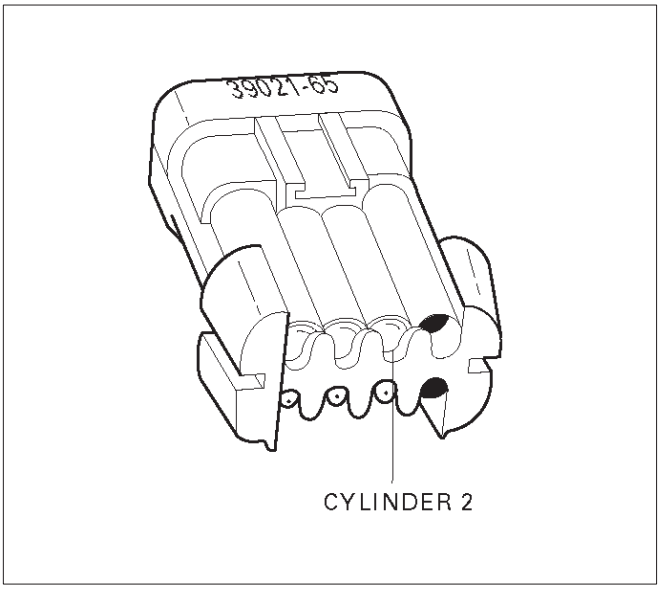

R321055

7. Because the test light was “ON” steady, voltage to the injector is OK, but the driver circuit is grounded at all times. This step determines if the circuit is shorted to ground or the ECM is faulty.

9. The reading should be about 12-14Ω.

10. Locating the open in the harness or in the injector will require removal of the manifold to provide access.

DTC P0202 – Injector 2 Control Circuit

Step	Action	Value(s)	Yes	No
1	Was the “On-Board Diagnostic (OBD) System Check” performed?	—	Go to *Step 2*	Go to *OBD System Check*
2	Will the engine start?	—	Go to *Step 3*	Go to *Engine Cranks But Will Not Run* chart
3	1. Install the Tech 2. Clear the DTC. 2. Idle the engine for one minute. Does DTC P0202 reset?	—	Go to *Step 5*	Go to *Step 4*
4	1. Review the Freeze Frame data with the ignition “ON” and the engine “OFF” and note the parameters. 2. Operate the vehicle within the Freeze Frame conditions as noted. Does P0202 reset?	—	Go to *Step 5*	Go to *Diagnostic Aids*
5	1. Engine “OFF.” 2. Disconnect the injector test connector. 3. Install an injector test light 5-8840-2636-0 on injector test connector 4. Crank the engine and note the light. Does the cylinder 2 test light blink?	—	Go to *Fuel Injector Coil Test Procedure*	Go to *Step 6*

DTC P0202 – Injector 2 Control Circuit (Cont'd)

Step	Action	Value(s)	Yes	No
6	Note whether the injector test light for cylinder 2 was "OFF" or "ON" steady in step 5. Was the test light "ON" steady while cranking the engine?	—	Go to *Step 7*	Go to *Step 9*
7	1. Disconnect the ECM connector for the affected injectors. 2. With a test light connected to B+, probe the affected injector driver circuit. Does the test light illuminate?	—	Go to *Step 8*	Go to *Step 15*
8	Repair short to ground in the injector driver circuit. Is the action complete?	—	Go to *OBD System Check*	—
9	1. Disconnect the injector test connector. 2. At the injector side of the harness, connect an ohmmeter between the positive wire (red with blue tracer) and the wire for cylinder 2 (green with orange tracer). Does the ohmmeter indicate continuity?	—	Go to *Step 11*	Go to *Step 10*
10	Repair the open injector harness wire or open injector. Is the action complete?	—	Verify repair	—
11	At the ECM side of the injector test connector, check the green/orange wire for a short to voltage. Was there a short to voltage?	—	Go to *Step 12*	Go to *Step 13*
12	Repair the short to voltage. Is the action complete?	—	Verify repair	—
13	Check for an open circuit between the injector test connector and the ECM. Was there an open circuit?	—	Go to *Step 14*	Go to *Step 15*
14	Repair the open circuit. Is the action complete?	—	Verify repair	—
15	Replace the ECM. Is the action complete?	—	Verify repair	—

Diagnostic Trouble Code (DTC) P0203 Injector 3 Control Circuit

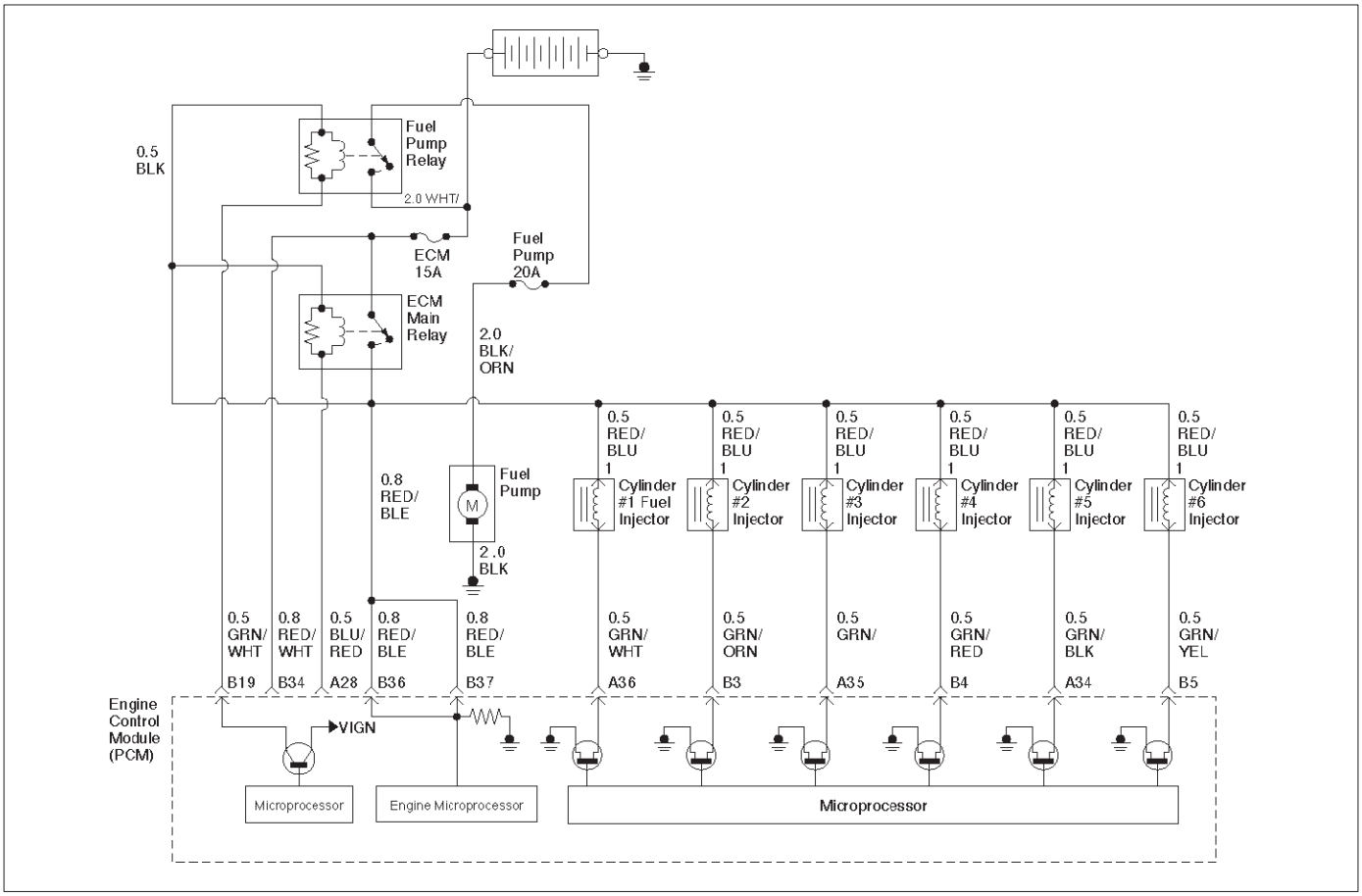

060RW055

Circuit Description

The Engine Control Module ECM has six individual injector driver circuits. Each controls an injector. When the driver circuit is grounded by the ECM, the injector is activated. The ECM monitors the current in each driver circuit. The voltage on each driver is monitored to detect a fault. If the voltage is not what the ECM expects to monitor on the circuit, a DTC is set. This DTC is also set if an injector driver is shorted to voltage or if there is an open circuit.

Conditions for Setting the DTC

- The battery voltage is more than 11 volts.
- Injector pulse reading is between 2.5m second and 7.5m second.
- No fuel cut.
- Engine running speed is between 700 r.p.m and 2000 r.p.m.
- No related CKP/CMP DTCs.
- No injector pulse reading with engine running speed is 200 r.p.m.

Action Taken When the DTC Sets

- The ECM will illuminate the malfunction indicator lamp (MIL) the first time the fault is detected.
- The ECM will store conditions which were present when the DTC was set as Freeze Frame and in the Failure Records data.

Conditions for Clearing the MIL/DTC

- The ECM will turn “OFF” the MIL on the third consecutive trip cycle in which the diagnostic has been run and the fault is no longer present.
- A history DTC P0203 will clear after 40 consecutive warm-up cycles occur without a fault.
- DTC P0203 can be cleared by using the Tech 2 “Clear Info” function or by disconnecting the ECM battery feed.

Diagnostic Aids

An injector driver circuit that is open or shorted to voltage will cause a DTC P0203 to set. It will also cause a misfire due to an inoperative injector. A misfire DTC will also be set indicating which cylinder is inoperative.

Long term and short term fuel trims that are excessively high or low are a good indication that an injector is faulty. Use Fuel Injector Coil Test Procedure to check for faulty injectors.

Test Description

The number(s) below refer to the step number(s) on the Diagnostic Chart.

3. This step determines if DTC P0203 is the result of a hard failure or an intermittent condition.

5. A special injector test connector is provided so that the injectors can be electrically tested without removal of the manifold. The special 7-way gray connector is located at the rear of the air cleaner assembly. The test connector can be identified by the blue connector lock which is tethered to the wiring harness. If the light for cylinder 3 is “ON” steady before cranking the engine as well as while cranking the engine, then the injector driver circuit is shorted to ground.

   If the test light blinks while cranking, the ECM and the wiring to the injectors are OK. The Fuel Injector Coil Test Procedure will check if the injectors are faulty.

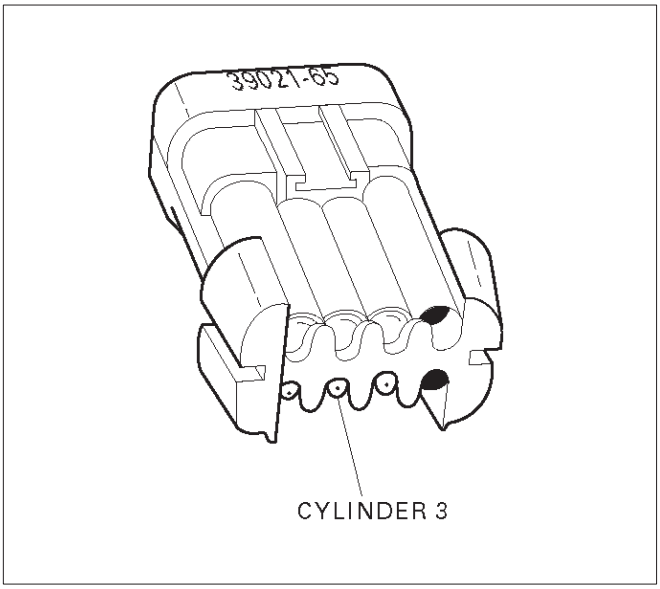

R321056

7. Because the test light was “ON” steady, voltage to the injector is OK, but the driver circuit is grounded at all times. This step determines if the circuit is shorted to ground or the ECM is faulty.

9. The reading should be about 12-14Ω.

10. Locating the open in the harness or in the injector will require removal of the manifold to provide access.

DTC P0203 – Injector 3 Control Circuit

Step	Action	Value(s)	Yes	No
1	Was the “On-Board Diagnostic (OBD) System Check” performed?	—	Go to *Step 2*	Go to *OBD System Check*
2	Will the engine start?	—	Go to *Step 3*	Go to *Engine Cranks But Will Not Run* chart
3	1. Install the Tech 2. Clear the DTC. 2. Idle the engine for one minute. Does DTC P0203 reset?	—	Go to *Step 5*	Go to *Step 4*
4	1. Review the Freeze Frame data with the ignition “ON” and the engine “OFF” and note the parameters. 2. Operate the vehicle within the Freeze Frame conditions as noted. Does P0203 reset?	—	Go to *Step 5*	Go to *Diagnostic Aids*
5	1. Engine “OFF.” 2. Disconnect the injector test connector . 3. Install an injector test light 5-8840-2636-0 on injector connector 4. Crank the engine and note the light. Does the cylinder 3 test light blink?	—	Go to *Fuel Injector Coil Test Procedure*	Go to *Step 6*

DTC P0203 – Injector 3 Control Circuit (Cont'd)

Step	Action	Value(s)	Yes	No
6	Note whether the injector test light for cylinder 3 was "OFF" or "ON" steady in step 5. Was the test light "ON" steady while cranking the engine?	—	Go to *Step 7*	Go to *Step 9*
7	1. Disconnect the ECM connector for the affected injectors. 2. With a test light connected to B+, probe the affected injector driver circuit. Does the test light illuminate?	—	Go to *Step 8*	Go to *Step 15*
8	Repair short to ground in the injector driver circuit. Is the action complete?	—	Go to *OBD System Check*	—
9	1. Disconnect the injector test connector. 2. At the injector side of the harness, connect an ohmmeter between the positive wire (red with blue tracer) and the wire for cylinder 3 (green). Does the ohmmeter indicate continuity?	—	Go to *Step 11*	Go to *Step 10*
10	Repair the open injector harness wire or open injector. Is the action complete?	—	Verify repair	—
11	At the ECM side of the injector test connector, check the green wire for a short to voltage. Was there a short to voltage?	—	Go to *Step 12*	Go to *Step 13*
12	Repair the short to voltage. Is the action complete?	—	Verify repair	—
13	Check for an open circuit between the injector test connector and the ECM. Was there an open circuit?	—	Go to *Step 14*	Go to *Step 15*
14	Repair the open circuit. Is the action complete?	—	Verify repair	—
15	Replace the ECM. Is the action complete?	—	Verify repair	—

Diagnostic Trouble Code (DTC) P0204 (Flash DTC=31) Injector 4 Control Circuit

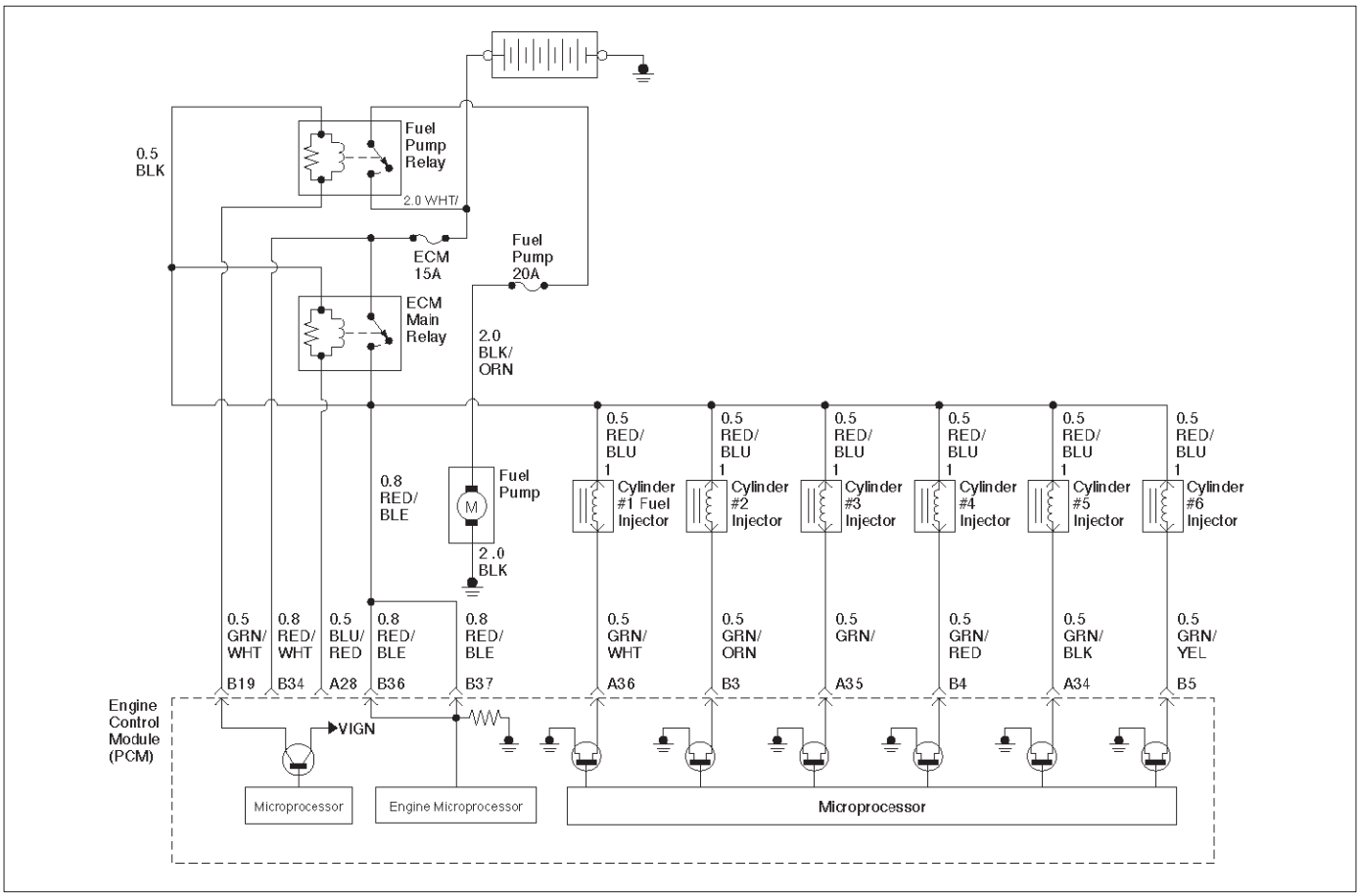

060RW055

Circuit Description

The Engine Control Module ECM has six individual injector driver circuits. Each controls an injector. When the driver circuit is grounded by the ECM, the injector is activated. The ECM monitors the current in each driver circuit. The voltage on each driver is monitored to detect a fault. If the voltage is not what the ECM expects to monitor on the circuit, a DTC is set. This DTC is also set if an injector driver is shorted to voltage or if there is an open circuit.

Conditions for Setting the DTC

- The battery voltage is more than 11 volts.
- Injector pulse reading is between 2.5m second and 7.5m second.
- No fuel cut.
- Engine running speed is between 700 r.p.m and 2000 r.p.m.
- No related CKP CMP/DTCs.
- No injector pulse reading with engine running speed is 200 r.p.m.

Action Taken When the DTC Sets

- The ECM will illuminate the malfunction indicator lamp (MIL) the first time the fault is detected.
- The ECM will store conditions which were present when the DTC was set as Freeze Frame and in the Failure Records data.

Conditions for Clearing the MIL/DTC

- The ECM will turn “OFF” the MIL on the third consecutive trip cycle in which the diagnostic has been run and the fault is no longer present.
- A history DTC P0204 will clear after 40 consecutive warm-up cycles occur without a fault.
- DTC P0204 can be cleared by using the Tech 2 “Clear Info” function or by disconnecting the ECM battery feed.

Diagnostic Aids

An injector driver circuit that is open or shorted to voltage will cause a DTC P0204 to set. It will also cause a misfire due to an inoperative injector. A misfire DTC will also be set indicating which cylinder is inoperative.

Long term and short term fuel trims that are excessively high or low are a good indication that an injector is faulty. Use Fuel Injector Coil Test Procedure to check for faulty injectors.

Test Description

The number(s) below refer to the step number(s) on the Diagnostic Chart.

3. This step determines if DTC P0204 is the result of a hard failure or an intermittent condition.

5. A special injector test connector is provided so that the injectors can be electrically tested without removal of the manifold. The special 7-way gray connector is located at the rear of the air cleaner assembly. The test connector can be identified by the blue connector lock which is tethered to the wiring harness. If the light for cylinder 4 is “ON” steady before cranking the engine as well as while cranking the engine, then the injector driver circuit is shorted to ground.

   If the test light blinks while cranking, the ECM and the wiring to the injectors are OK. The Fuel Injector Coil Test Procedure will check if the injectors are faulty.

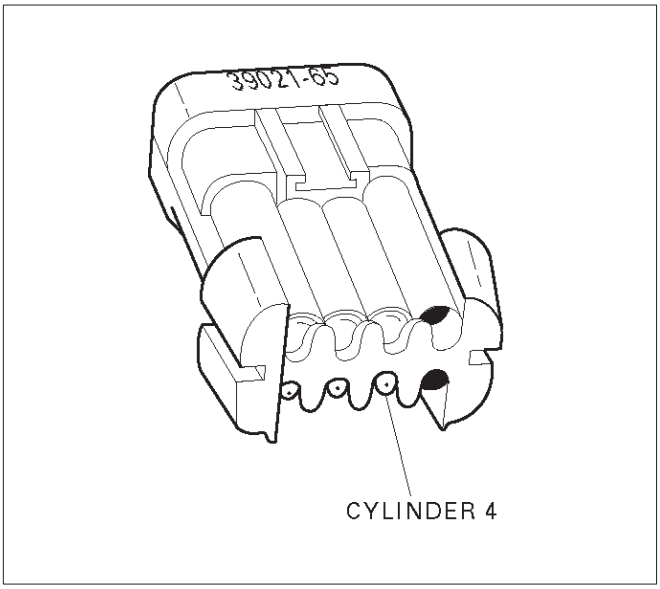

R321057

7. Because the test light was “ON” steady, voltage to the injector is OK, but the driver circuit is grounded at all times. This step determines if the circuit is shorted to ground or the ECM is faulty.

9. The reading should be about 12-14Ω.

10. Locating the open in the harness or in the injector will require removal of the manifold to provide access.

DTC P0204 – Injector 4 Control Circuit

Step	Action	Value(s)	Yes	No
1	Was the “On-Board Diagnostic (OBD) System Check” performed?	—	Go to *Step 2*	Go to *OBD System Check*
2	Will the engine start?	—	Go to *Step 3*	Go to *Engine Cranks But Will Not Run* chart
3	1. Install the Tech 2. Clear the DTC. 2. Idle the engine for one minute. Does DTC P0204 reset?	—	Go to *Step 5*	Go to *Step 4*
4	1. Review the Freeze Frame data with the ignition “ON” and the engine “OFF” and note the parameters. 2. Operate the vehicle within the Freeze Frame conditions as noted. Does P0204 reset?	—	Go to *Step 5*	Go to *Diagnostic Aids*
5	1. Engine “OFF.” 2. Disconnect the injector test connector. 3. Install an injector test light 5-8840-2636-0 on injector test connector. 4. Crank the engine and note the light. Does the cylinder 4 test light blink?	—	Go to *Fuel Injector Coil Test Procedure*	Go to Step 6

DTC P0204 – Injector 4 Control Circuit (Cont'd)

Step	Action	Value(s)	Yes	No
6	Note whether the injector test light was "OFF" or "ON" steady in step 5. Was the test light "ON" steady while cranking the engine?	—	Go to *Step 7*	Go to *Step 9*
7	1. Disconnect the ECM connector for the affected injectors. 2. With a test light connected to B+, probe the affected injector driver circuit. Does the test light illuminate?	—	Go to *Step 8*	Go to *Step 15*
8	Repair short to ground in the injector driver circuit. Is the action complete?	—	Go to *OBD System Check*	—
9	1. Disconnect the injector test connector. 2. At the injector side of the harness, connect an ohmmeter between the positive wire (red with blue tracer) and the wire for cylinder 4 (green/red). Does the ohmmeter indicate continuity?	—	Go to *Step 11*	Go to *Step 10*
10	Repair the open injector harness wire or open injector. Is the action complete?	—	Verify repair	—
11	At the ECM side of the injector test connector, check the green/red wire for a short to voltage. Was there a short to voltage?	—	Go to *Step 12*	Go to *Step 13*
12	Repair the short to voltage. Is the action complete?	—	Verify repair	—
13	Check for an open circuit between the injector test connector and the ECM. Was there an open circuit?	—	Go to *Step 14*	Go to *Step 15*
14	Repair the open circuit. Is the action complete?	—	Verify repair	—
15	Replace the ECM. Is the action complete?	—	Verify repair	—

Diagnostic Trouble Code (DTC) P0205 (Flash DTC=31) Injector 5 Control Circuit

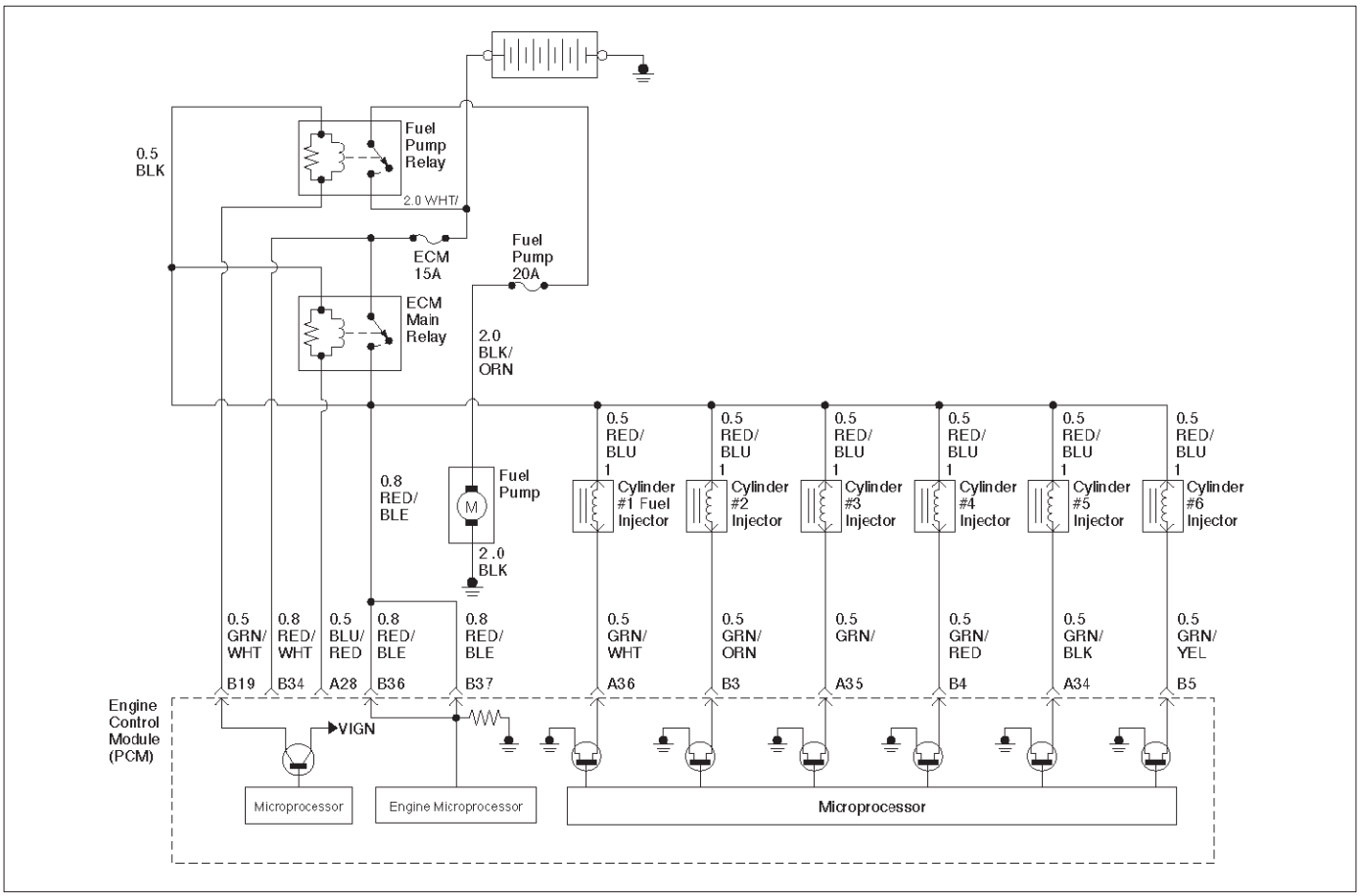

060RW055

Circuit Description

The Engine Control Module ECM has six individual injector driver circuits. Each controls an injector. When the driver circuit is grounded by the ECM, the injector is activated. The ECM monitors the current in each driver circuit. The voltage on each driver is monitored to detect a fault. If the voltage is not what the ECM expects to monitor on the circuit, a DTC is set. This DTC is also set if an injector driver is shorted to voltage or if there is an open circuit.

Conditions for Setting the DTC

- The battery voltage is more than 11 volts.
- Injector pulse reading is between 2.5m second and 7.5m second.
- No fuel cut.
- Engine running speed is between 700 r.p.m and 2000 r.p.m.
- No related CKP/CMP DTCs.
- No injector pulse reading with engine running speed is 200 r.p.m.

Action Taken When the DTC Sets

- The ECM will illuminate the malfunction indicator lamp (MIL) the first time the fault is detected.
- The ECM will store conditions which were present when the DTC was set as Freeze Frame and in the Failure Records data.

Conditions for Clearing the MIL/DTC

- The ECM will turn “OFF” the MIL on the third consecutive trip cycle in which the diagnostic has been run and the fault is no longer present.
- A history DTC P0205 will clear after 40 consecutive warm-up cycles occur without a fault.
- DTC P0205 can be cleared by using the Tech 2 “Clear Info” function or by disconnecting the ECM battery feed.

Diagnostic Aids

An injector driver circuit that is open or shorted to voltage will cause a DTC P0205 to set. It will also cause a misfire due to an inoperative injector. A misfire DTC will also be set indicating which cylinder is inoperative.

Long term and short term fuel trims that are excessively high or low are a good indication that an injector is faulty. Use Fuel Injector Coil Test Procedure to check for faulty injectors.

Test Description

The number(s) below refer to the step number(s) on the Diagnostic Chart.

3. This step determines if DTC P0205 is the result of a hard failure or an intermittent condition.

5. A special injector test connector is provided so that the injectors can be electrically tested without removal of the manifold. The special 7-way gray connector is located at the rear of the air cleaner assembly. The test connector can be identified by the blue connector lock which is tethered to the wiring harness. If the light for cylinder 5 is “ON” steady before cranking the engine as well as while cranking the engine, then the injector driver circuit is shorted to ground.

   If the test light blinks while cranking, the ECM and the wiring to the injectors are OK. Fuel Injector Coil Test Procedure will check if the injectors are faulty.

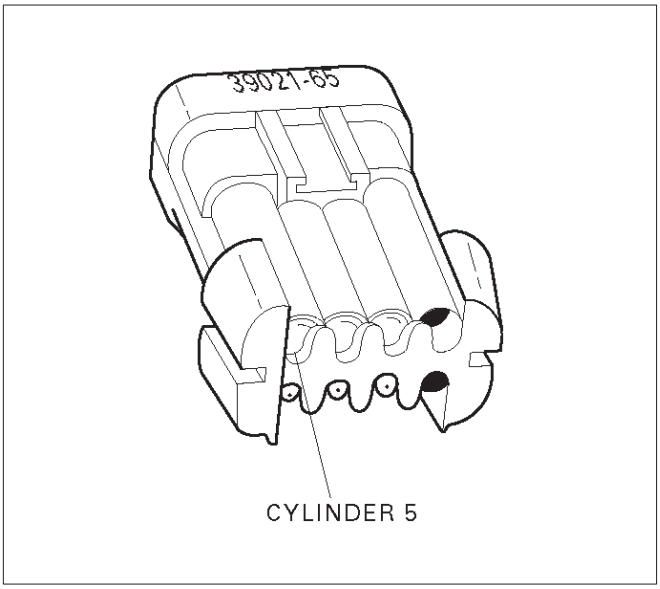

R321058

7. Because the test light was “ON” steady, voltage to the injector is OK, but the driver circuit is grounded at all times. This step determines if the circuit is shorted to ground or the ECM is faulty.

9. The reading should be about 12-14Ω.

10. Locating the open in the harness or in the injector will require removal of the manifold to provide access.

DTC P0205 – Injector 5 Control Circuit

Step	Action	Value(s)	Yes	No
1	Was the “On-Board Diagnostic (OBD) System Check” performed?	—	Go to *Step 2*	Go to *OBD System Check*
2	Will the engine start?	—	Go to *Step 3*	Go to *Engine Cranks But Will Not Run* chart
3	1. Install the Tech 2. Clear the DTC. 2. Idle the engine for one minute. Does DTC P0205 reset?	—	Go to *Step 5*	Go to *Step 4*
4	1. Review the Freeze Frame data with the ignition “ON” and the engine “OFF” and note the parameters. 2. Operate the vehicle within the Freeze Frame conditions as noted. Does P0205 reset?	—	Go to *Step 5*	Go to *Diagnostic Aids*
5	1. Engine “OFF.” 2. Disconnect the injector test connector. 3. Install an injector test light 5-8840-2636-0 on the injector test connector. 4. Crank the engine and note the light. Does the cylinder 5 test light blink?	—	Go to *Fuel Injector Coil Test Procedure*	Go to *Step 6*

DTC P0205 – Injector 5 Control Circuit (Cont'd)

Step	Action	Value(s)	Yes	No
6	Note whether the injector test light was "OFF" or "ON" steady in step 5. Was the test light "ON" steady while cranking the engine?	—	Go to *Step 7*	Go to *Step 9*
7	1. Disconnect the ECM connector for the affected injectors. 2. With a test light connected to B+, probe the affected injector driver circuit. Does the test light illuminate?	—	Go to *Step 8*	Go to *Step 15*
8	Repair short to ground in the injector driver circuit. Is the action complete?	—	Go to *OBD System Check*	—
9	1. Disconnect the injector test connector. 2. At the injector side of the harness, connect an ohmmeter between the positive wire (red with blue tracer) and the wire for cylinder 5 (green with black tracer). Does the ohmmeter indicate continuity?	—	Go to *Step 11*	Go to *Step 10*
10	Repair the open injector harness wire or open injector. Is the action complete?	—	Verify repair	—
11	At the ECM side of the injector test connector, check the green/black wire for a short to voltage. Was there a short to voltage?	—	Go to *Step 12*	Go to *Step 13*
12	Repair the short to voltage. Is the action complete?	—	Verify repair	—
13	Check for an open circuit between the injector test connector and the ECM. Was there an open circuit?	—	Go to *Step 14*	Go to *Step 15*
14	Repair the open circuit. Is the action complete?	—	Verify repair	—
15	Replace the ECM. Is the action complete?	—	Verify repair	—

Diagnostic Trouble Code (DTC) P0206 (Flash DTC=31) Injector 6 Control Circuit

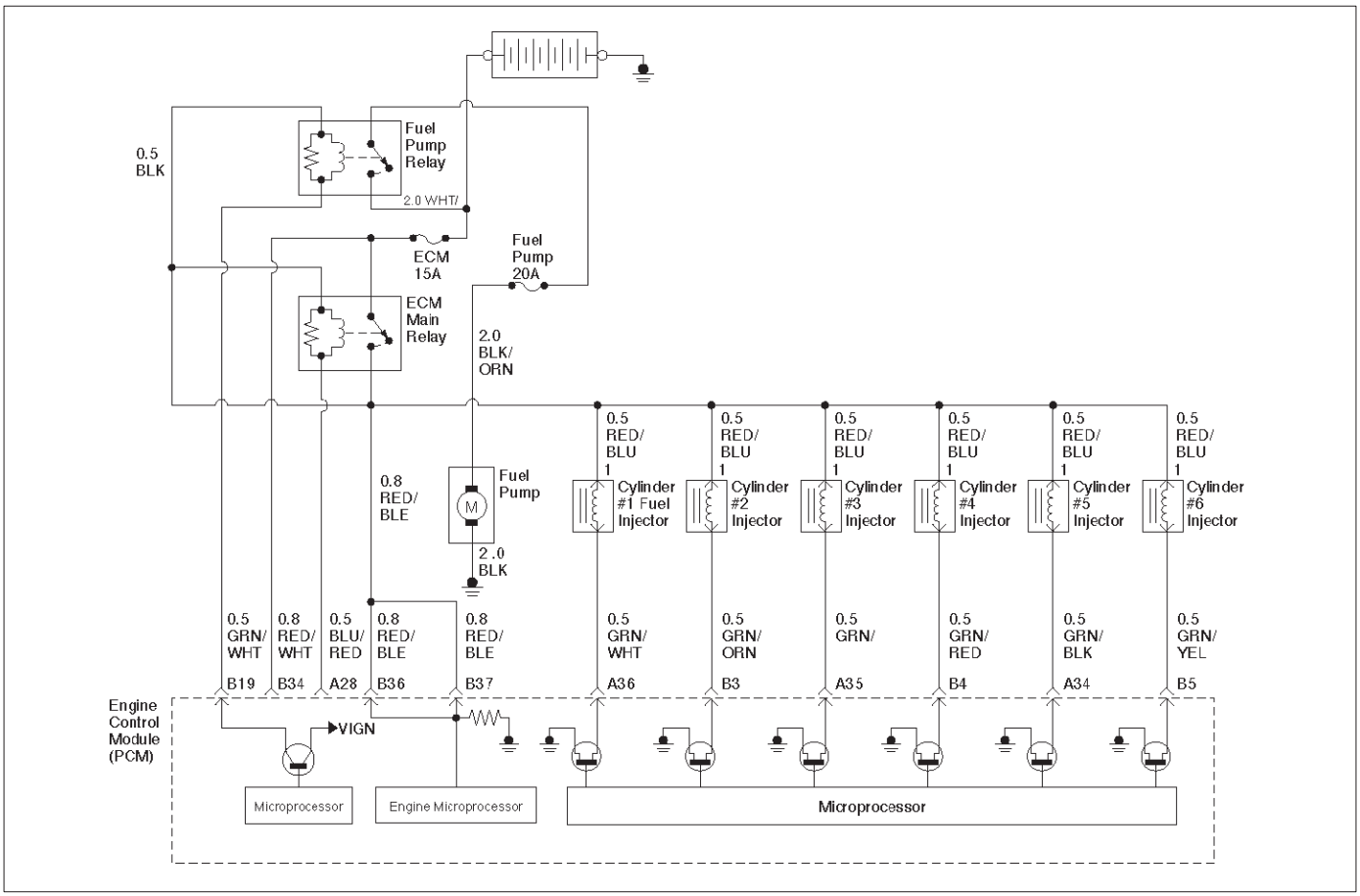

060RW055

Circuit Description

The Engine Control Module ECM has six individual injector driver circuits. Each controls an injector. When the driver circuit is grounded by the ECM, the injector is activated. The ECM monitors the current in each driver circuit. The voltage on each driver is monitored to detect a fault. If the voltage is not what the ECM expects to monitor on the circuit, a DTC is set. This DTC is also set if an injector driver is shorted to voltage or if there is an open circuit.

Conditions for Setting the DTC

- The battery voltage is more than 11 volts.
- Injector pulse reading is between 2.5m second and 7.5m second.
- No fuel cut.
- Engine running speed is between 700 r.p.m and 2000 r.p.m.
- No related CKP CMP DTCs.
- No injector pulse reading with engine running speed is 200 r.p.m.

Action Taken When the DTC Sets

- The ECM will illuminate the malfunction indicator lamp (MIL) the first time the fault is detected.
- The ECM will store conditions which were present when the DTC was set as Freeze Frame and in the Failure Records data.

Conditions for Clearing the MIL/DTC

- The ECM will turn “OFF” the MIL on the third consecutive trip cycle in which the diagnostic has been run and the fault is no longer present.
- A history DTC P0206 will clear after 40 consecutive warm-up cycles occur without a fault.
- DTC P0206 can be cleared by using the Tech 2 “Clear Info” function or by disconnecting the ECM battery feed.

Diagnostic Aids

An injector driver circuit that is open or shorted to voltage will cause a DTC P0206 to set. It will also cause a misfire due to an inoperative injector. A misfire DTC will also be set indicating which cylinder is inoperative.

Long term and short term fuel trims that are excessively high or low are a good indication that an injector is faulty. Use Fuel Injector Coil Test Procedure to check for faulty injectors.

Test Description

The number(s) below refer to the step number(s) on the Diagnostic Chart.

3. This step determines if DTC P0206 is the result of a hard failure or an intermittent condition.

5. A special injector test connector is provided so that the injectors can be electrically tested without removal of the manifold. The special 7-way gray connector is located at the rear of the air cleaner assembly. The test connector can be identified by the blue connector lock which is tethered to the wiring harness. If the light for cylinder 6 is “ON” steady before cranking the engine as well as while cranking the engine, then the injector driver circuit is shorted to ground.

   If the test light blinks while cranking, the ECM and the wiring to the injectors are OK. The Fuel Injector Coil Test Procedure will check if the injectors are faulty.

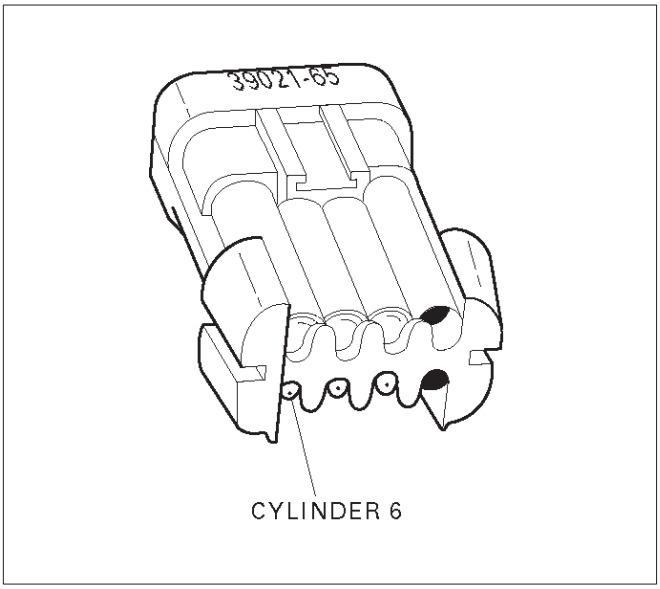

R321059

7. Because the test light was “ON” steady, voltage to the injector is OK, but the driver circuit is grounded at all times. This step determines if the circuit is shorted to ground or the ECM is faulty.

9. The reading should be about 12-14Ω.

10. Locating the open in the harness or in the injector will require removal of the manifold to provide access.

DTC P0206 – Injector 6 Control Circuit

Step	Action	Value(s)	Yes	No
1	Was the “On-Board Diagnostic (OBD) System Check” performed?	—	Go to *Step 2*	Go to *OBD System Check*
2	Will the engine start?	—	Go to *Step 3*	Go to *Engine Cranks But Will Not Run* chart
3	1. Install the Tech 2. Clear the DTC. 2. Idle the engine for one minute. Does DTC P0206 reset?	—	Go to *Step 5*	Go to *Step 4*
4	1. Review the Freeze Frame data with the ignition “ON” and the engine “OFF” and note the parameters. 2. Operate the vehicle within the Freeze Frame conditions as noted. Does P0206 reset?	—	Go to *Step 5*	Go to *Diagnostic Aids*
5	1. Engine “OFF.” 2. Disconnect the injector test connector. 3. Install an injector test light 5-8840-2636-0 on injector test connector. 4. Crank the engine and note the light. Does the cylinder 6 test light blink?	—	Go to *Fuel Injector Coil Test Procedure*	Go to *Step 6*

DTC P0206 – Injector 6 Control Circuit (Cont'd)

Step	Action	Value(s)	Yes	No
6	Note whether the injector test light was "OFF" or "ON" steady in step 5. Was the test light "ON" steady while cranking the engine?	—	Go to *Step 7*	Go to *Step 9*
7	1. Disconnect the ECM connector for the affected injectors. 2. With a test light connected to B+, probe the affected injector driver circuit. Does the test light illuminate?	—	Go to *Step 8*	Go to *Step 15*
8	Repair short to ground in the injector driver circuit. Is the action complete?	—	Go to *OBD System Check*	—
9	1. Disconnect the injector test connector. 2. At the injector side of the harness, connect an ohmmeter between the positive wire (red with blue tracer) and the wire for cylinder 6 (green with yellow tracer). Does the ohmmeter indicate continuity?	—	Go to *Step 11*	Go to *Step 10*
10	Repair the open injector harness wire or open injector Is the action complete?	—	Verify repair	—
11	At the ECM side of the injector test connector, check the green/yellow wire for a short to voltage. Was there a short to voltage?	—	Go to *Step 12*	Go to *Step 13*
12	Repair the short to voltage. Is the action complete?	—	Verify repair	—
13	Check for an open circuit between the injector test connector and the ECM. Was there an open circuit?	—	Go to *Step 14*	Go to *Step 15*
14	Repair the open circuit. Is the action complete?	—	Verify repair	—
15	Replace the ECM. Is the action complete?	—	Verify repair	—

Diagnostic Trouble Code (DTC) P0336 (Flash DTC=29) CKP Reference Signal Circuit

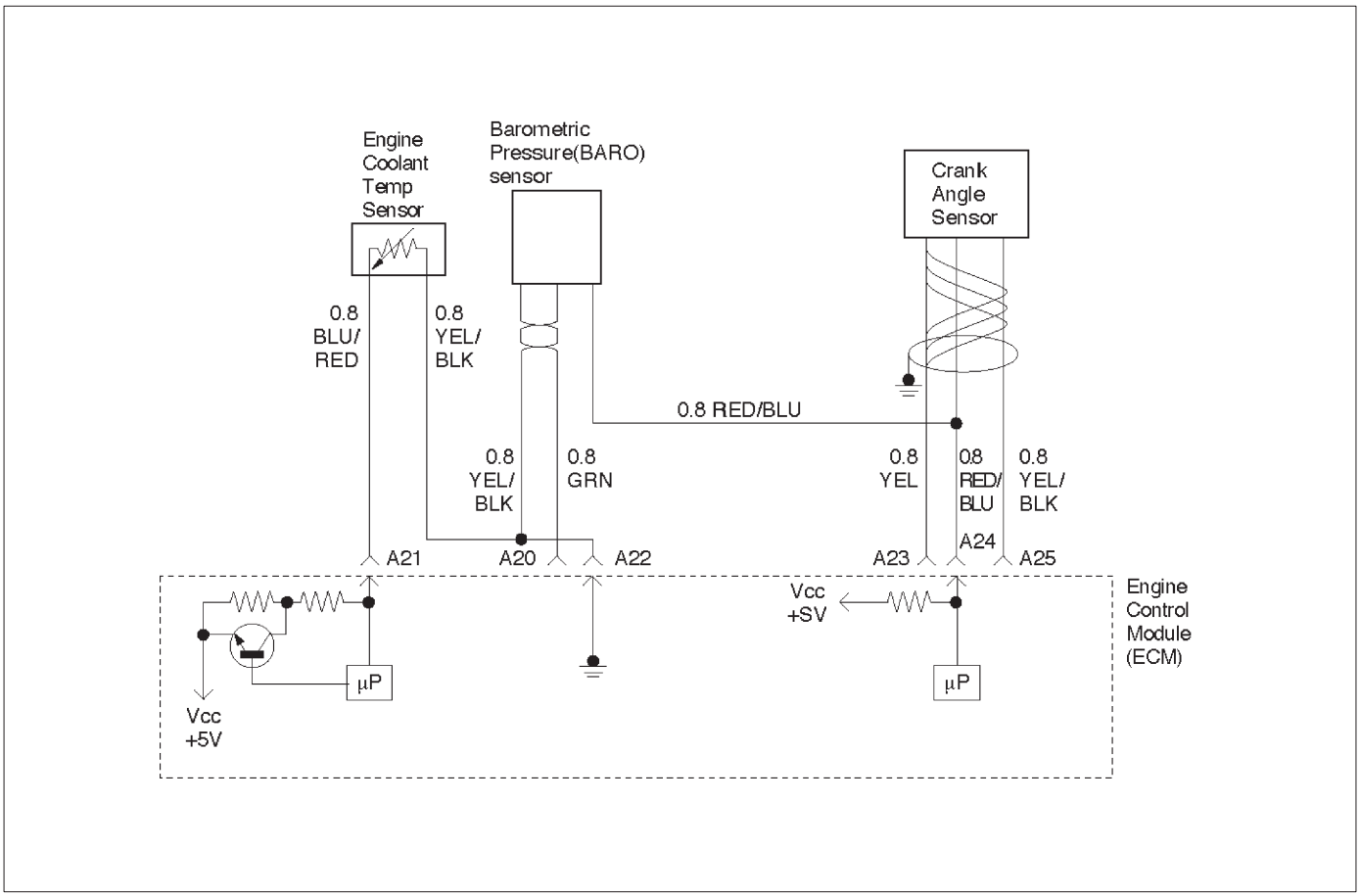

Circuit Description

The CKP reference signal is produced by the crankshaft position (CKP) sensor. During one crankshaft revolution, crankshaft pulses will be produced. The Engine Control Module ECM uses the CKP reference signal to calculate engine RPM and crankshaft position. The ECM constantly monitors the number of pulses on the CKP reference circuit and compares them to the number of camshaft position (CMP) signal pulses being received. If the ECM receives an incorrect number of pulses on the CKP reference circuit, DTC P0336 will set.

Conditions for Setting the DTC

- Ignition SW is ON.
- Extra or missing pulse is detected between consecutive CKP reference pulses.
- The battery voltage is more than 11 volts.
- Engine running speed is below 2000 r.p.m.
- The CKP Pulse reading is 110 for 10th.

Action Taken When the DTC Sets

- The ECM will illuminate the malfunction indicator lamp (MIL) after the second consecutive trip in which the fault is detected.
- The ECM will store conditions which were present when the DTC was set as Freeze Frame and in the Failure Records data.

Conditions for Clearing the MIL/DTC

- The ECM will turn the MIL “OFF” on the third consecutive trip cycle during which the diagnostic has been run and the fault condition is no longer present.
- A history DTC P0336 will clear after 40 consecutive warm-up cycles have occurred without a fault.
- DTC P0336 can be cleared by using the Tech 2 “Clear Info” function or by disconnecting the ECM battery feed.

Diagnostic Aids

An intermittent may be caused by a poor connection, rubbed–through wire insulation or a wire broken inside the insulation. Check for:

- Poor connection – Inspect the ECM harness and connectors for improper mating, broken locks, improperly formed or damaged terminals, and poor terminal-to-wire connection.
- Damaged harness – Inspect the wiring harness for damage. If the harness appears to be OK, disconnect the ECM, turn the ignition on and observe a voltmeter connected to the CKP reference circuit at the ECM harness connector while moving connectors and wiring harnesses related to the ICM. A change in voltage will indicate the location of the fault.

Reviewing the Failure Records vehicle mileage since the diagnostic test last failed may help determine how often the condition that caused the DTC to be set occurs. This may assist in diagnosing the condition.

DTC P0336 – 58X Reference Signal Circuit

Step	Action	Value(s)	Yes	No
1	Was the “On-Board Diagnostic (OBD) System Check” performed?	—	Go to *Step 2*	Go to *OBD System Check*
2	Attempt to start the engine. Does the engine start?	—	Go to *Step 3*	Go to *“Engine Cranks But Will Not Run”* chart
3	1. Review and record Failure Records information. 2. Clear DTC P0336. 3. Start the engine and idle for 1 minute. 4. Observe DTCs. Is DTC P0336 set?	—	Go to *Step 4*	Refer to Diagnostic Aids
4	1. Disconnect the ECM and CKP sensor. 2. Check for an open or a short to ground in the CKP reference circuit between the CKP sensor connector and the ECM harness connector. 3. If a problem is found, repair as necessary. Was a problem found?	—	Verify repair	Go to *Step 5*
5	1. Reconnect the ECM and CKP sensor. 2. Connect a DVM to measure voltage on the CKP reference circuit at the ECM connector. 3. Observe the voltage while cranking the engine. Is the voltage near the specified value?	2.5 V	Go to *Step 8*	Go to *Step 6*
6	Check the connections at the CKP sensor and replace the terminals if necessary. Did any terminals require replacement?	—	Verify repair	Go to *Step 7*
7	Replace the CKP sensor. Use caution to avoid any hot oil that may drip out. Is the action complete?	—	Verify repair	—
8	Check connections at the ECM and replace the terminals if necessary. Did any terminals require replacement?	—	Verify repair	Go to *Step 10*
9	Replace the ECM. Is the action complete?	—	Verify repair	—

Diagnostic Trouble Code (DTC) P0337 (Flash DTC=29) CKP Sensor Circuit Low Frequency

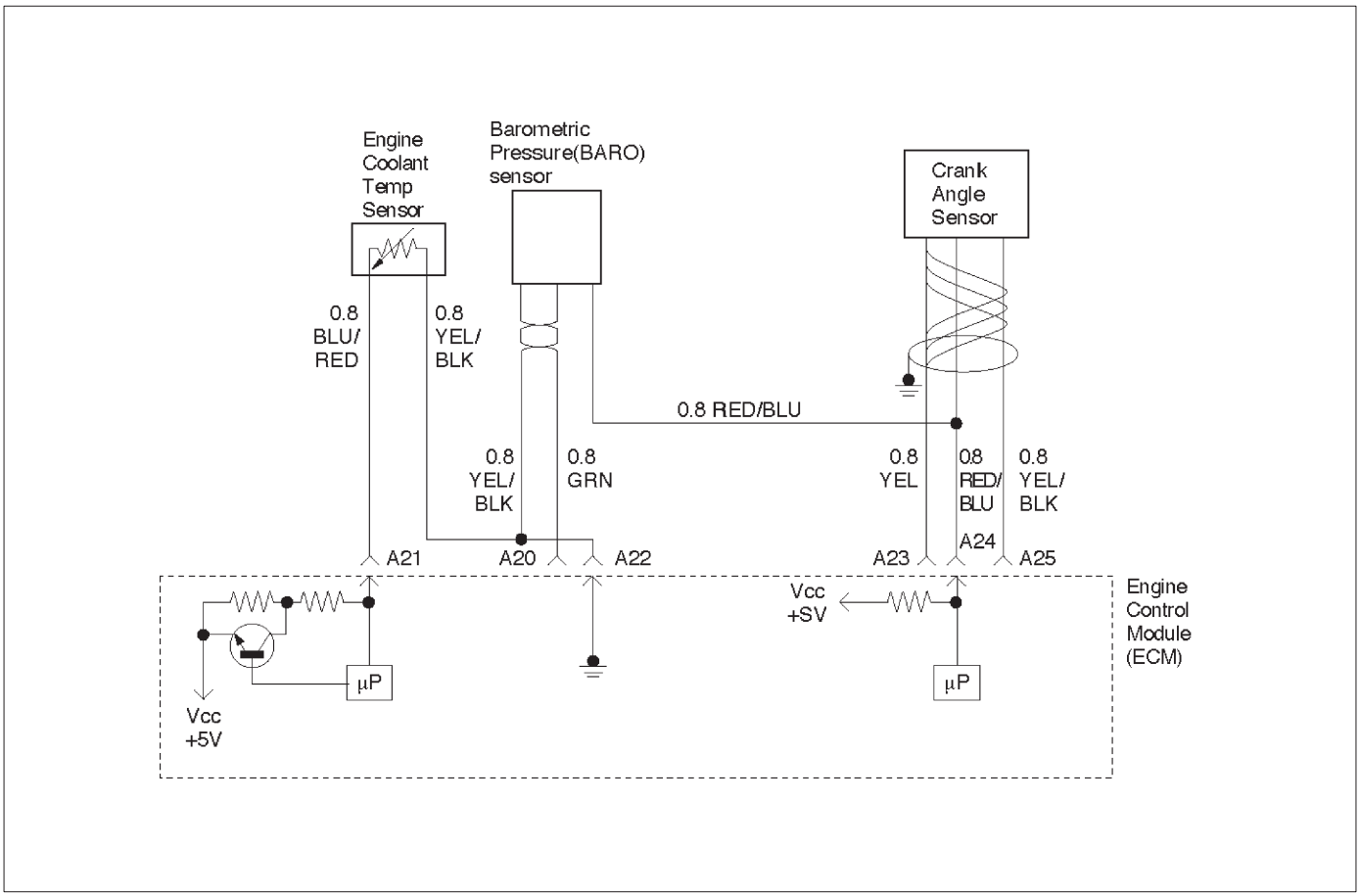

060RW072

Circuit Description

The CKP reference signal is produced by the crankshaft position (CKP) sensor. During one crankshaft revolution, CKP crankshaft reference pulses will be produced. The Engine Control Module ECM uses the CKP reference signal to calculate engine RPM and crankshaft position. The ECM constantly monitors the number of pulses on the CKP reference circuit and compares them to the number of camshaft position (CMP) signal pulses being received. If the ECM does not receive pulses on the CKP reference circuit, DTC P0337 will set.

Conditions for Setting the DTC

- Ignition SW is ON.
- The battery voltage is more than 11 volts.
- Engine running speed is below 2000 r.p.m.
- The CKP pulse reading is 10 for 10th.

Action Taken When the DTC Sets

- The ECM will illuminate the malfunction indicator lamp (MIL) after the second consecutive trip in which the fault is detected.
- The ECM will store conditions which were present when the DTC was set as Freeze Frame and in the Failure Records data.

Conditions for Clearing the MIL/DTC

- The ECM will turn the MIL “OFF” on the third consecutive trip cycle during which the diagnostic has been run and the fault condition is no longer present.
- A history DTC P0337 will clear after 40 consecutive warm-up cycles have occurred without a fault.
- DTC P0337 can be cleared by using the Tech 2 “Clear Info” function or by disconnecting the ECM battery feed.

Diagnostic Aids

An intermittent may be caused by a poor connection, rubbed-through wire insulation or a wire broken inside the insulation. Check for:

- Poor connection – Inspect the ECM harness and connectors for improper mating, broken locks, improperly formed or damaged terminals, and poor terminal-to-wire connection.
- Damaged harness – Inspect the wiring harness for damage. If the harness appears to be OK, disconnect the ECM, turn the ignition on and observe a voltmeter connected to the CKP reference circuit at the ECM harness connector while moving connectors and wiring harnesses related to the ICM. A change in voltage will indicate the location of the fault.

Reviewing the Failure Records vehicle mileage since the diagnostic test last failed may help determine how often the condition that caused the DTC to be set occurs. This may assist in diagnosing the condition.

DTC P0337 – CKP Sensor Circuit Low Frequency

Step	Action	Value(s)	Yes	No
1	Was the “On-Board Diagnostic (OBD) System Check” performed?	—	Go to *Step 2*	Go to *OBD System Check*
2	Attempt to start the engine. Does the engine start?	—	Go to *Step 3*	Go to *Chart 3*
3	1. Review and record Failure Records information. 2. Clear DTC P0337. 3. Start the engine and idle for 1 minute. 4. Observe DTCs. Is DTC P0337 set?	—	Go to *Step 4*	Refer to *Diagnostic Aid*
4	1. Disconnect the CKP sensor. 2. Ignition “ON.” 3. Using a DVM, verify that 5 V reference and ground are being supplied at the sensor connector (ECM side). Are 4-6 volts and ground available at the sensor?	—	Go to *Step 7*	Go to *Step 5*
5	1. Ignition “ON.” 2. With a DVM, backprobe the ECM connector 5 V reference and ground connections. Are 5 V reference and ground available at the ECM?	—	Go to *Step 6*	Go to *Step 11*
6	Check 5 V reference or ground between the CKP sensor and ECM and repair the open circuit, short to ground or short to voltage. Is the action complete?	—	Verify repair	—
7	1. Ignition “OFF.” 2. Disconnect the ECM and CKP sensor. 3. Check for an open or a short to ground in the CKP reference circuit between the CKP sensor connector and the ECM harness connector. 4. If a problem is found, repair as necessary. Was a problem found?	—	Verify repair	Go to *Step 8*
8	1. Reconnect the ECM and CKP sensor. 2. Connect a DVM to measure voltage on the CKP reference circuit at the ECM connector. 3. Observe the voltage while cranking the engine. Is the voltage near the specified value?	2.5 V	Go to *Step 11*	Go to *Step 9*
9	Check the connections at the CKP sensor and replace the terminals if necessary. Did any terminals require replacement?	—	Verify repair	Go to *Step 10*
10	Replace the CKP sensor. Use caution and avoid hot oil that may drip out. Is the action complete?	—	Verify repair	—

DTC P0337 – CKP Sensor Circuit Low Frequency (Cont'd)

Step	Action	Value(s)	Yes	No
11	Check the connections at the ECM and replace the terminals if necessary. Did any terminals require replacement?	—	Verify repair	Go to *Step 12*
12	Replace the ECM. Is the action complete?	—	Verify repair	—

Diagnostic Trouble Code (DTC) P0341 (Flash DTC=41) CMP Sensor Circuit Performamce

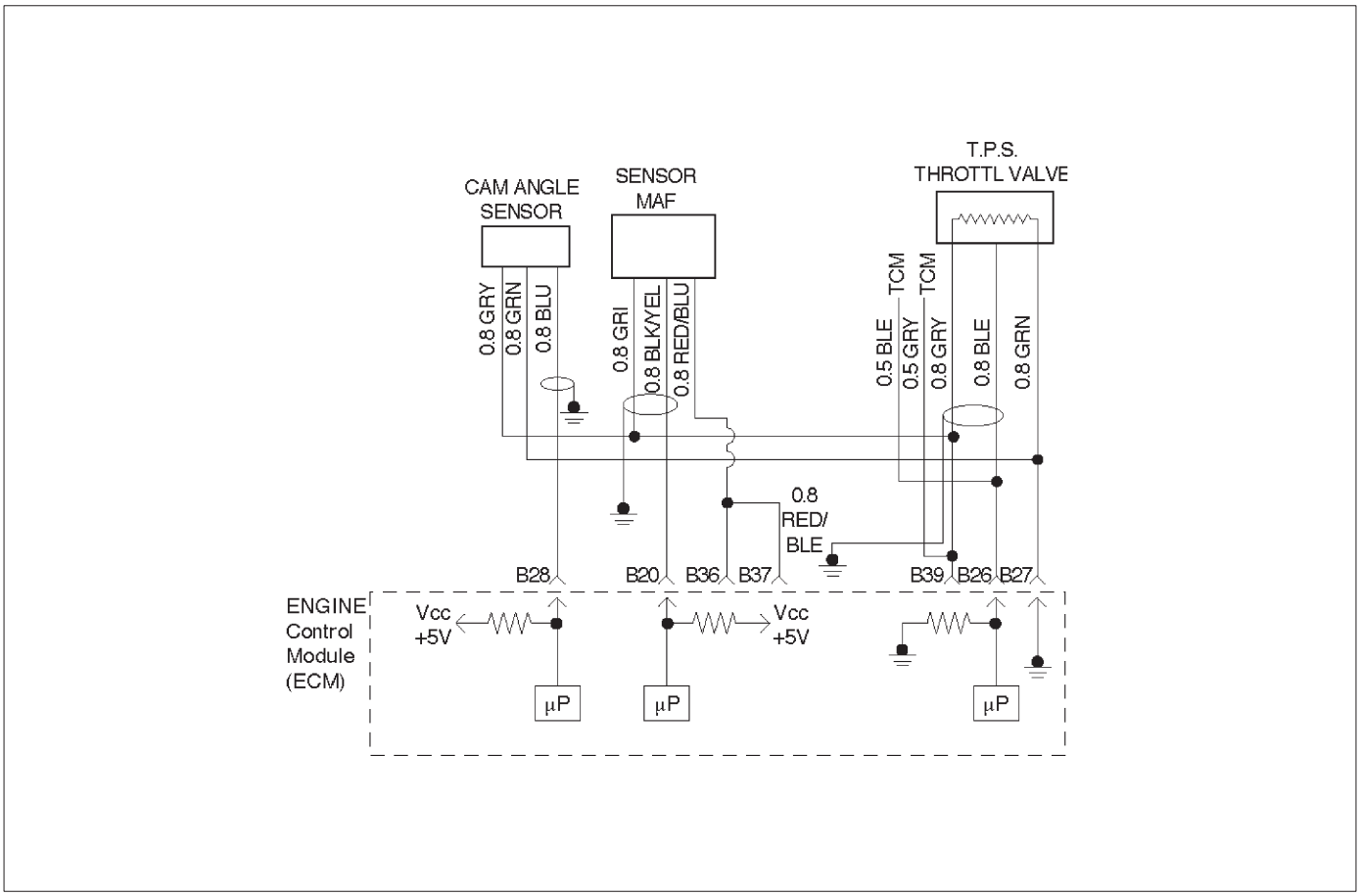

060RW077

Circuit Description

The CMP signal is produced by the camshaft position (CMP) sensor pulses when the engine is running and crankshaft position (CKP) sync pulses are also being received. The Engine Control Module ECM uses the CMP signal pulses to initiate sequential fuel injection. The ECM constantly monitors the number of pulses on the CMP signal circuit and compares the number of CMP pulses to the number of reference pulses received. If the ECM receives an incorrect number of pulses on the CMP reference circuit, DTC P0341 will set and the ECM will initiate injector sequence without the CMP signal with a one in six chance that injector sequence is correct. The engine will continue to start and run normally, although the misfire diagnostic will be affected if a misfiring condition occurs.

Conditions for Setting the DTC

- The engine is running.
- The battery voltage is more than 11 volts.
- No related CKP DTCs.
- CMP pulse is not synchronized with CKP pulse for 20th.

Action Taken When the DTC Sets

- The ECM will illuminate the malfunction indicator lamp (MIL) after the second consecutive trip in which the fault is detected.

- The ECM will initiate the injector sequence without the CMP signal with a one in six chance that the injector sequence is correct.
- The ECM will store conditions which were present when the DTC was set as Freeze Frame and in the Failure Records data.

Conditions for Clearing the MIL/DTC

- The ECM will turn the MIL "OFF" on the third consecutive trip cycle during which the diagnostic has been run and the fault condition is no longer present.
- A history DTC P0341 will clear after 40 consecutive warm-up cycles have occurred without a fault.
- DTC P0341 can be cleared by using the Tech 2 "Clear Info" function or by disconnecting the ECM battery feed.

Diagnostic Aids

An intermittent may be caused by a poor connection, rubbed–through wire insulation or a wire broken inside the insulation. Check for:

- Poor connection — Inspect the ECM harness and connectors for improper mating, broken locks, improperly formed or damaged terminals, and poor terminal-to-wire connection.
- Damaged harness — Inspect the wiring harness for damage. If the harness appears to be OK, disconnect the ECM, turn the ignition on and observe a voltmeter connected to the CMP signal circuit at the ECM harness connector while moving connectors and wiring harnesses related to the ICM and the CMP sensor. A change in voltage will indicate the location of the fault.

Reviewing the Failure Records vehicle mileage since the diagnostic test last failed may help determine how often the condition that caused the DTC to be set occurs. This may assist in diagnosing the condition.

NOTE: On early-built TFR/S, the Tech 2 indication for "CMP ACT. COUNTER" (Cam Position Sensor activity) will continue to count up, even if no cam position signal is being received by the ECM.

Test Description

Number(s) below refer to the step number(s) on the Diagnostic Chart.

2. Ensures that the fault is present.

12. Determines whether the fault is being caused by a missing camshaft magnet or a faulty sensor. The voltage measured in this step should read around 4 volts, toggling to near 0 volts when the CMP sensor interfaces with the camshaft magnet.

DTC P0341 —CMP Sensor Circuit Performance

Step	Action	Value(s)	Yes	No
1	Was the "On-Board Diagnostic (OBD) System Check" performed?	—	Go to *Step 2*	Go to *OBD System Check*
2	1. Ignition "ON." 2. Review and record Tech 2 Failure Records data. 3. Operate the vehicle within Failure Records conditions as noted. 4. Using a Tech 2, monitor "DTC" info for DTC P0341 until the DTC P0341 test runs. 5. Note the test result. Does the Tech 2 indicate DTC P0341 failed this ignition?	—	Go to *Step 3*	Refer to *Diagnostic Aids*
3	1. Disconnect the CMP sensor. 2. Measure the voltage between the sensor feed circuit and the sensor ground circuit at the CMP sensor harness connector. Does the voltage measure near the specified value?	4-6 V	Go to *Step 4*	Go to *Step 5*
4	Measure the voltage between the CMP sensor signal circuit and the sensor ground circuit at the CMP sensor harness connector. Does the voltage measure near the specified value?	4-6 V	Go to *Step 11*	Go to *Step 8*
5	If the voltage measured in step 3 was less than 4-6 volts, proceed directly to step 6 without completing this step. If the voltage in step 3 was greater than 4-6 V, repair the short to voltage in the CMP feed circuit. Is the action complete?	—	Verify repair	—

DTC P0341 —CMP Sensor Circuit Performance (Cont'd)

Step	Action	Value(s)	Yes	No
6	1. Check for poor connections at the camshaft position sensor. 2. If a problem is found, repair it as necessary. Was a problem found?	—	Verify repair	Go to *Step 7*
7	1. Ignition "OFF," disconnect the ECM and the CMP sensor. 2. Check the following circuits for an open between the ignition control module and the CMP sensor: ● The sensor feed circuit. 3. If a problem is found, repair as necessary. Was a problem found?	—	Verify repair	Go to *Step 9*
8	1. Ignition "OFF," disconnect the ECM (leave the CMP sensor disconnected). 2. Ignition "ON," check the following circuits: ● The CMP sensor signal circuit for an open or a short to voltage. ● The CMP sensor input signal circuit for a short to ground. 3. If a problem is found, repair it as necessary. Was a problem found?	—	Verify repair	Go to *Step 9*
9	Check for a short or open in the sensor ground circuit. Was a problem found?	—	Verify repair	Go to *Step 10*
10	1. Check for poor connections at the ECM. 2. If a problem is found, repair it as necessary. Was a problem found?	—	Verify repair	Go to *Step 11*
11	Backprobe the ECM connector with a DVM to monitor voltage on the camshaft position input signal circuit while cranking the engine with the sensor connected. (Use rubber band, tape, or an assistant to keep the DVM lead in contact with the sensor terminal during this test.) Does the voltage toggle between the specified values?	4-0 V	Go to *Step 15*	Go to *Step 12*
12	1. Remove the CMP sensor from the engine front cover (leave the sensor wiring connected). 2. Place a magnet on the CMP sensor. (If you use a magnet that is too small to cover the face of the sensor, test on every part of the sensor face because only a small area will respond to this test.) Does the DVM display a voltage near the specified value?	0 V	Go to *Step 13*	Go to *Step 14*
13	Replace the faulty or missing camshaft position sensor magnet. Is the action complete?	—	Verify repair	—
14	Replace the camshaft position sensor. Is the action complete?	—	Verify repair	—
15	Replace the ECM. Is the action complete?	—	Verify repair	—

Diagnostic Trouble Code (DTC) P0342 (Flash DTC=41) CMP Sensor Circuit Low

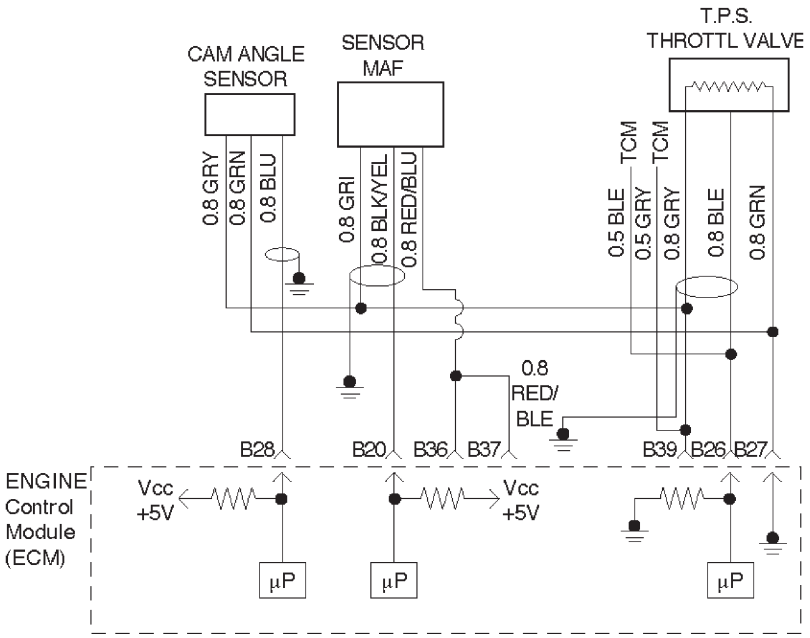

060RW077

Circuit Description

The CMP signal produced by the camshaft position (CMP) sensor pulses when the engine is running and crankshaft position (CKP) sync pulses are also being received. The hall type CMP sensor and the CKP sensor share 5 V and ground connections at the Engine Control Module ECM. The third wire at the sensor is a signal circuit to the ECM. The ECM uses the CMP signal pulses to initiate sequential fuel injection. The ECM constantly monitors the number of pulses on the CMP signal circuit and compares the number of CMP pulses to the number of 58X reference pulses received. If the ECM does not receive pulses on the CMP reference circuit, DTC P0342 will set and the ECM will initiate injector sequence without the CMP signal with a one in six chance that injector sequence is correct. The engine will continue to start and run normally, although the misfire diagnostic will be affected if a misfiring condition occurs.

Conditions for Setting the DTC

- The engine is running.
- The battery is more than 11 volts.
- No related CKP DTCs.
- CMP pulse reverse one's couse for 20th.

Action Taken When the DTC Sets

- The ECM will illuminate the malfunction indicator lamp (MIL) after the second consecutive trip in which the fault is detected.
- The ECM will initiate injector sequence without the CMP signal with a one in six chance that the injector sequence is correct.
- The ECM will store conditions which were present when the DTC was set as Freeze Frame and in the Failure Records data.

Conditions for Clearing the MIL/DTC

- The ECM will turn the MIL "OFF" on the third consecutive trip cycle during which the diagnostic has been run and the fault condition is no longer present.
- A history DTC P0342 will clear after 40 consecutive warm-up cycles have occurred without a fault.
- DTC P0342 can be cleared by using the Tech 2 "Clear Info" function or by disconnecting the ECM battery feed.

Diagnostic Aids

An intermittent may be caused by a poor connection, rubbed-through wire insulation or a wire broken inside the insulation. Check for:

- Poor connection – Inspect the ECM harness and connectors for improper mating, broken locks, improperly formed or damaged terminals, and poor terminal to wire connection.
- Damaged harness – Inspect the wiring harness for damage. If the harness appears to be OK, disconnect the ECM, turn the ignition on and observe a voltmeter connected to the CMP signal circuit at the ECM harness connector while moving connectors and wiring harnesses related to the ICM and the CMP

sensor. A change in voltage will indicate the location of the fault.

NOTE: On early-built TFR/S, the Tech 2 indication for "CMP ACT. COUNTER" (Cam Position Sensor activity) will continue to count up, even if no cam position signal is being received by the ECM.

Test Description

Number(s) below refer to the step number(s) on the Diagnostic Chart.

2. Ensures that the fault is present.

14. Determines whether the fault is being caused by a missing camshaft magnet or a faulty ECM. The voltage measured in this step should read around 4 volts, toggling to near 0 volts when the CMP sensor interfaces with the camshaft magnet.

DTC P0342 —CMP Sensor Circuit Low

Step	Action	Value(s)	Yes	No
1	Was the "On-Board Diagnostic (OBD) System Check" performed?	—	Go to *Step 2*	Go to *OBD System Check*
2	1. Ignition "ON." 2. Review and record Tech 2 Failure Records data. 3. Operate the vehicle within Failure Records conditions as noted. 4. Using a Tech 2, monitor "DTC" information for DTC P0342 until the DTC P0342 test runs. 5. Note test result. Does the Tech 2 indicate DTC P0342 failed this ignition?	—	Go to *Step 3*	Refer to *Diagnostic Aids*
3	1. Ignition "ON." 2. Disconnect the CMP sensor. 3. Measure the voltage between the sensor feed circuit and the sensor ground circuit at the CMP sensor harness connector. Does the voltage measure near the specified value?	4-6 V	Go to *Step 7*	Go to *Step 4*
4	1. Ignition "OFF," disconnect the ECM and the CMP sensor. 2. Check for poor connections at the camshaft position sensor. 3. If a problem is found, repair it as necessary. Was a problem found?	—	Verify repair	Go to *Step 5*
5	1. Check for poor connections at the ECM. 2. If a problem is found, repair it as necessary. Was a problem found?	—	Verify repair	Go to *Step 6*
6	1. Check the following circuits between the ECM and the CMP sensor: • The sensor feed circuit. Open or short to ground? • The sensor ground circuit. Open or short to voltage? 2. If a problem is found, repair as necessary. Was a problem found?	—	Verify repair	—
7	1. Ignition "ON," engine "OFF." 2. Measure the voltage between the CMP sensor signal circuit and the sensor ground circuit at the CMP sensor harness connector. Does the voltage measure near the specified value?	4-6 V	Go to *Step 8*	Go to *Step 9*

DTC P0342 —CMP Sensor Circuit Low (Cont'd)

Step	Action	Value(s)	Yes	No
8	1. Turn the ignition "OFF." 2. Disconnect the ECM and connect a DVM to monitor voltage on the camshaft position signal circuit at the ECM connector. 3. Ignition "ON." 4. Monitor the voltage display on the DVM while repeatedly touching the CMP sensor signal circuit at the CMP sensor connector with a test light to ground. Does the DVM voltage display switch between 0 and approximately 5 volts when the test light is touched to the CMP sensor signal circuit?	—	Go to *Step 12*	Go to *Step 9*
9	1. Ignition "OFF." 2. Leave the ECM disconnected. 3. Ignition "ON." 4. Probe the camshaft position signal circuit at the ECM connector with a test light to B+. 5. If the test light is "ON," locate and repair the short to ground in the camshaft position input signal circuit. Was either circuit shorted to ground?	—	Verify repair	Go to *Step 10*
10	1. Ignition "OFF." 2. Leave the ECM disconnected. 3. Ignition "ON." 4. Probe the camshaft position signal circuit with a test light to ground. 5. If the test light is "ON," locate and repair the short to voltage in the camshaft position input signal circuit. Was the test light "ON"?	—	Verify repair	Go to *Step 11*
11	1. Ignition "OFF," disconnect the ECM (leave the CMP sensor disconnected). 2. Ignition "ON," check the following circuit: ● The CMP sensor signal circuit for an open. 3. If a problem is found, repair it as necessary. Was a problem found?	—	Verify repair	—
12	1. Ignition "ON." 2. Remove the CMP sensor from the engine front cover (leave the sensor wiring connected). 3. Place a magnet on the CMP sensor. If you use a magnet that is too small to cover the face of the sensor, test on every part of the sensor face because only a small area will respond to this test. Does the DVM display a voltage near the specified value?	0 V	Go to *Step 14*	Go to *Step 13*
13	Replace the camshaft position sensor. Is the action complete?	—	Verify repair	—
14	1. Reinstall the CMP sensor to the engine front cover. 2. Observe the DVM connected to monitor voltage on the camshaft position signal circuit while cranking the engine. Does the voltage toggle between the specified values?	4-0 V	Go to *Step 15*	Go to *Step 16*

DTC P0342 —CMP Sensor Circuit Low (Cont'd)

Step	Action	Value(s)	Yes	No
15	Replace the ECM. Is the action complete?	—	Verify repair	—
16	Replace faulty or missing camshaft magnet. Is the action complete?	—	Verify repair	—

Diagnostic Trouble Code (DTC) P0351 Ignition 1 Control Circuit

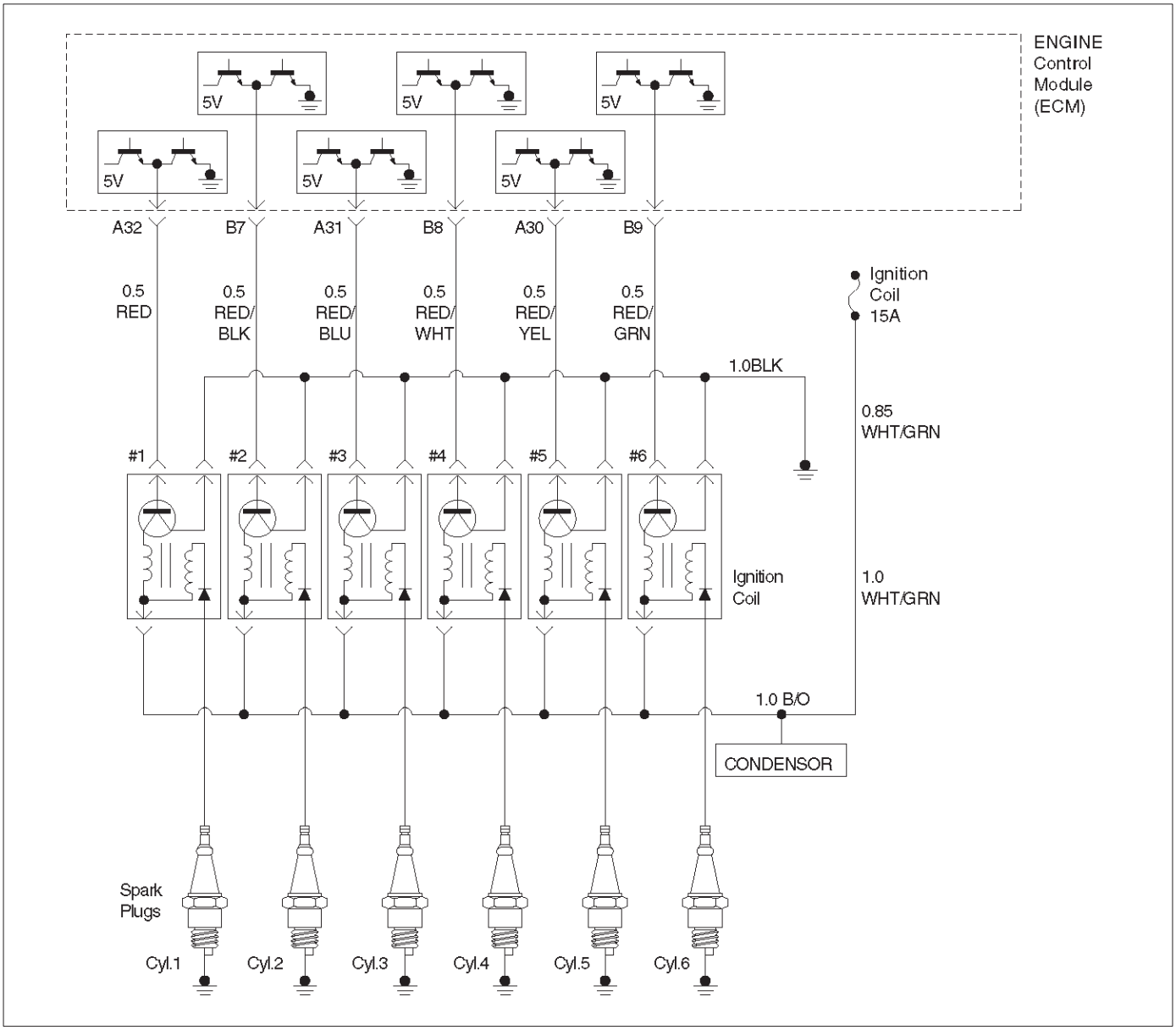

060RW075

Circuit Description

The Engine Control Module's ECM control circuit 1 provides a zero-volt or a 5-volt output signal to the ignition coil. The normal voltage on the circuit is zero volts. When the ignition coil receives the 5-volt signal from the ECM, it provides a ground path for the B+ supply to the primary side of the number 1 ignition coil. When the ECM shuts off the 5 volts to the ignition coil, the ignition coil turns "OFF." This causes the ignition coil primary magnetic field to collapse, producing a voltage in the secondary coil which fires the spark plug.

The circuit between the ECM and ignition coil is monitored for an open circuit, short to voltage, and short to ground. When the ECM detects a problem on ignition control circuit 1, it will set a DTC P0351.

Conditions for Setting the DTC

- The ignition is "ON."
- The engine is turning, determined by the crankshaft position input signal.
- Engine running speed is between 200 r.p.m and 850 r.p.m.
- Spark signal don't present 6 samples of continuous.

Action Taken When the DTC Sets

- The ECM will illuminate the malfunction indicator lamp (MIL) the first time the fault is detected.
- The ECM will store conditions which were present when the DTC was set as Freeze Frame and in the Failure Records data.

Conditions for Clearing the MIL/DTC

- The ECM will turn the MIL "OFF" on the third consecutive trip cycle in which the diagnostic has been run and the fault condition is no longer present.
- A history DTC P0351 will clear after 40 consecutive warm-up cycles occur without a fault.
- DTC P0351 can be cleared by using the Tech 2 "Clear Info" function or by disconnecting the ECM battery feed.

Diagnostic Aids

Check for the following conditions:

- Poor connection at ECM – Inspect the harness connectors for backed-out terminals, improper mating, broken locks, improperly formed or damaged terminals, and poor terminal-to-wire connections.
- Damaged harness – Inspect the wiring harness for damage. If the harness appears to be OK, observe the Tech 2 display related to DTC P0351 while moving the connector and wiring related to the ignition system. A change in the display will indicate the location of the fault.

Reviewing the Failure Records vehicle mileage since the diagnostic test last failed may help determine how often the condition that caused the DTC to be set occurs. This may assist in diagnosing the condition.

DTC P0351 – Ignition 1 Control Circuit

Step	Action	Value(s)	Yes	No
1	Was the “On-Board Diagnostic (OBD) System Check” performed?	—	Go to *Step 2*	Go to *OBD System Check*
2	1. Ignition “ON,” engine “OFF.” 2. Review and record Tech 2 Failure Records data. 3. Operate the vehicle within Failure Record conditions as noted. 4. Use a Tech 2 to monitor the “DTC” information for DTC P0351 until the DTC P0351 test runs. 5. Note the test result. Does the Tech 2 indicate DTC P0351 failed this ignition cycle?	—	Go to *Step 3*	Go to *Diagnostic Aids*
3	Check for faulty connection at ignition coil. Was a problem found?	—	Verify repair	Go to *Step 4*
4	Check for faulty connection at ECM connector. Was a problem found?	—	Verify repair	Go to *Step 5*
5	1. Ignition “ON,” engine “OFF.” 2. Back probe the ignition control circuit 1 at the ECM with a DVM. Is the voltage near the specified value?	25-55 mV	Go to *Step 6*	Go to *Step 9*
6	1. Ignition “ON,” engine running. 2. Back probe the ignition control circuit at the ECM for the cylinder being tested. Is the voltage in the specified range, rapidly toggling back and forth to a reading 20-50 mV higher?	100-180 mV	Go to *Step 7*	Go to *Step 13*
7	1. Ignition “OFF.” 2. Disconnect the 3-pin and 5-pin connectors at the ignition coil. 3. Check ignition control circuit 1 voltage at the ignition coil connector while cranking the engine. Does the voltage measure between the specified values?	200-1200 mV	Go to *Step 8*	Go to *Step 11*
8	Replace the ignition coil. Is the action complete?	—	Verify repair	—
9	1. Ignition “OFF.” 2. Disconnect the ECM and the ignition coil. 3. Check ignition control circuit 1 for short to ground. Was a problem found?	—	Verify repair	Go to *Step 10*
10	Check ignition control circuit 1 for short to voltage. Was a problem found?	—	Verify repair	Go to *Step 13*

DTC P0351 – Ignition 1 Control Circuit (Cont'd)

Step	Action	Value(s)	Yes	No
11	Check for an open ignition control circuit 1. Was the ignition control circuit open?	—	Go to *Step 12*	Go to *Step 13*
12	Repair the open ignition control circuit. Is the action complete?	—	Verify repair	—
13	Replace the ECM. Is the action complete?	—	Verify repair	—

Diagnostic Trouble Code (DTC) P0352 (Flash DTC=42) Ignition 2 Control Circuit

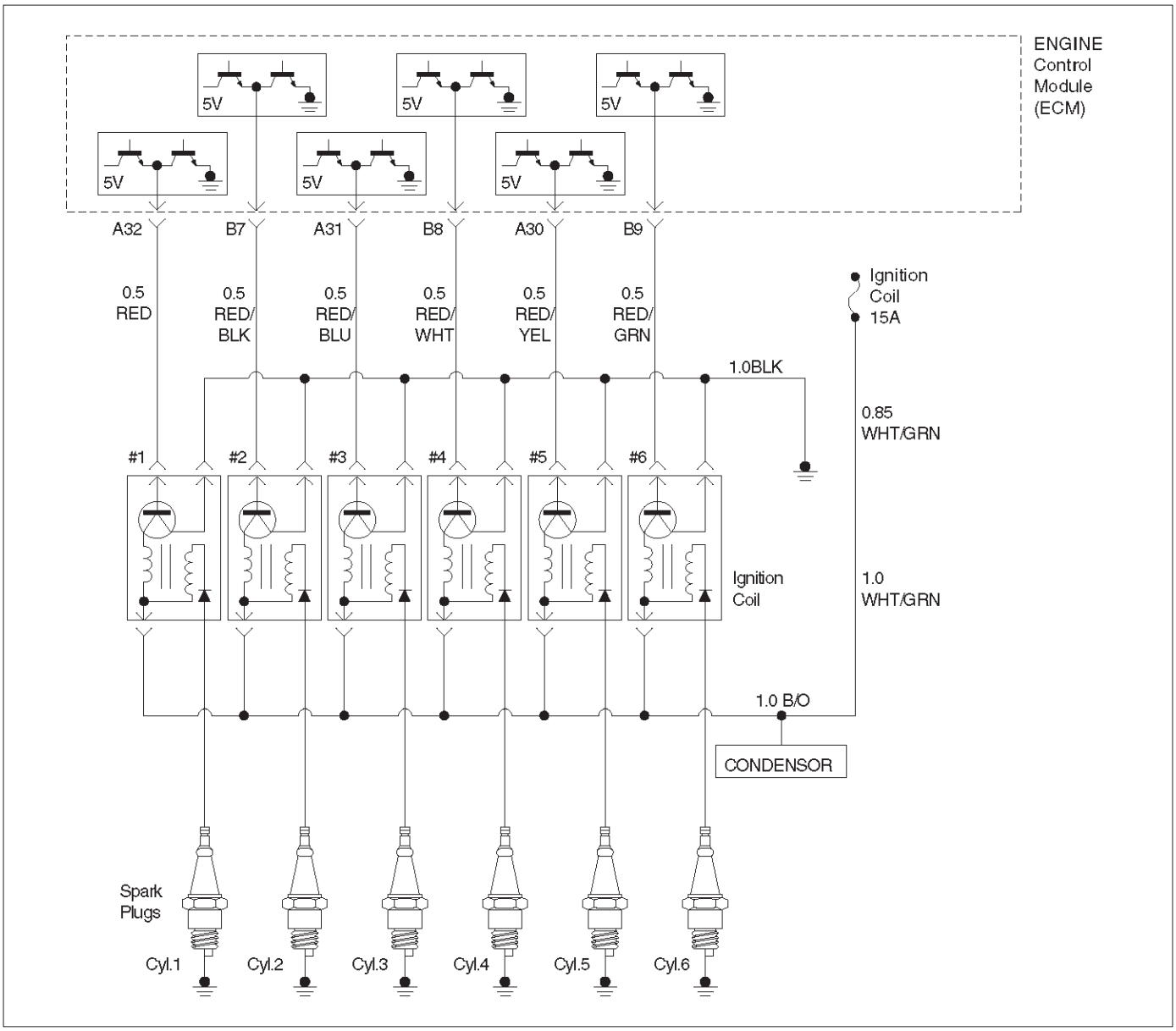

060RW075

Circuit Description

The engine control module's (ECM) control circuit 2 provides a zero-volt or a 5-volt output signal to the ignition coil. The normal voltage on the circuit is zero volts. When the ignition coil receives the 5-volt signal from the ECM, it provides a ground path for the B+ supply to the primary side of the number 2 ignition coil. When the ECM shuts off the 5 volts to the ignition coil, the ignition coil turns "OFF." This causes the ignition coil primary magnetic field to collapse, producing a voltage in the secondary coil which fires the spark plug.

The circuit between the ECM and ignition coil is monitored for an open circuit, short to voltage, and short to ground. When the ECM detects a problem on ignition control circuit 2, it will set a DTC P0352.

Conditions for Setting the DTC

- The ignition is "ON."
- The engine is turning, determined by the crankshaft position input signal.
- Engine running speed is between 200 r.p.m and 850 r.p.m.
- Spark signal don't present 6 samples of continuous.

Action Taken When the DTC Sets

- The ECM will illuminate the malfunction indicator lamp (MIL) the first time the fault is detected.
- The ECM will store conditions which were present when the DTC was set as Freeze Frame and in the Failure Records data.

Conditions for Clearing the MIL/DTC

- The ECM will turn the MIL "OFF" on the third consecutive trip cycle in which the diagnostic has been run and the fault condition is no longer present.
- A history DTC P0352 will clear after 40 consecutive warm-up cycles occur without a fault.

- DTC P0352 can be cleared by using the Tech 2 “Clear Info” function or by disconnecting the ECM battery feed.

Diagnostic Aids

Check for the following conditions:

- Poor connection at ECM – Inspect the harness connectors for backed-out terminals, improper mating, broken locks, improperly formed or damaged terminals, and poor terminal-to-wire connections.
- Damaged harness – Inspect the wiring harness for damage. If the harness appears to be OK, observe the Tech 2 display related to DTC P0352 while moving the connector and wiring related to the ignition system. A change in the display will indicate the location of the fault.

Reviewing the Failure Records vehicle mileage since the diagnostic test last failed may help determine how often the condition that caused the DTC to be set occurs. This may assist in diagnosing the condition.

DTC P0352 – Ignition 2 Control Circuit

Step	Action	Value(s)	Yes	No
1	Was the “On-Board Diagnostic (OBD) System Check” performed?	—	Go to *Step 2*	Go to *OBD System Check*
2	1. Ignition “ON,” engine “OFF.” 2. Review and record Tech 2 Failure Records data. 3. Operate the vehicle within Failure Record conditions as noted. 4. Use a Tech 2 to monitor the “DTC” information for DTC P0352 until the DTC P0352 test runs. 5. Note the test result. Does the Tech 2 indicate DTC P0352 failed this ignition cycle?	—	Go to *Step 3*	Go to *Diagnostic Aids*
3	Check for faulty connection at ignition coil. Was a problem found?	—	Verify repair	Go to *Step 4*
4	Check for faulty connection at ECM connector. Was a problem found?	—	Verify repair	Go to *Step 5*
5	1. Ignition “ON,” engine “OFF.” 2. Back probe the ignition control circuit 2 at the ECM with a DVM . Is the voltage near the specified value?	25-55 mV	Go to *Step 6*	Go to *Step 9*
6	1. Ignition “ON,” engine running. 2. Back probe the ignition control circuit at the ECM for the cylinder being tested. Is the voltage in the specified range, rapidly toggling back and forth to a reading 20-50 mV higher?	100-180 mV	Go to *Step 7*	Go to *Step 13*
7	1. Ignition “OFF.” 2. Disconnect the 3-pin and 5-pin connectors at the ignition coil. 3. Check ignition control circuit 2 voltage at the ignition coil connector while cranking the engine connector. Does the voltage measure between the specified values?	200-1200 mV	Go to *Step 8*	Go to *Step 11*
8	Replace the ignition coil. Is the action complete?	—	Verify repair	—
9	1. Ignition “OFF.” 2. Disconnect the ECM and the ignition coil. 3. Check ignition control circuit 2 for short to ground. Was a problem found?	—	Verify repair	Go to *Step 10*

DTC P0352 – Ignition 2 Control Circuit (Cont'd)

Step	Action	Value(s)	Yes	No
10	Check ignition control circuit 2 for short to voltage. Was a problem found?	—	Verify repair	Go to *Step 13*
11	Check for an open ignition control circuit 2. Was the ignition control circuit open?	—	Go to *Step 12*	Go to *Step 13*
12	Repair the open ignition control circuit. Is the action complete?	—	Verify repair	—
13	Replace the ECM. Is the action complete?	—	Verify repair	—

Diagnostic Trouble Code (DTC) P0353 (Flash DTC=42) Ignition 3 Control Circuit

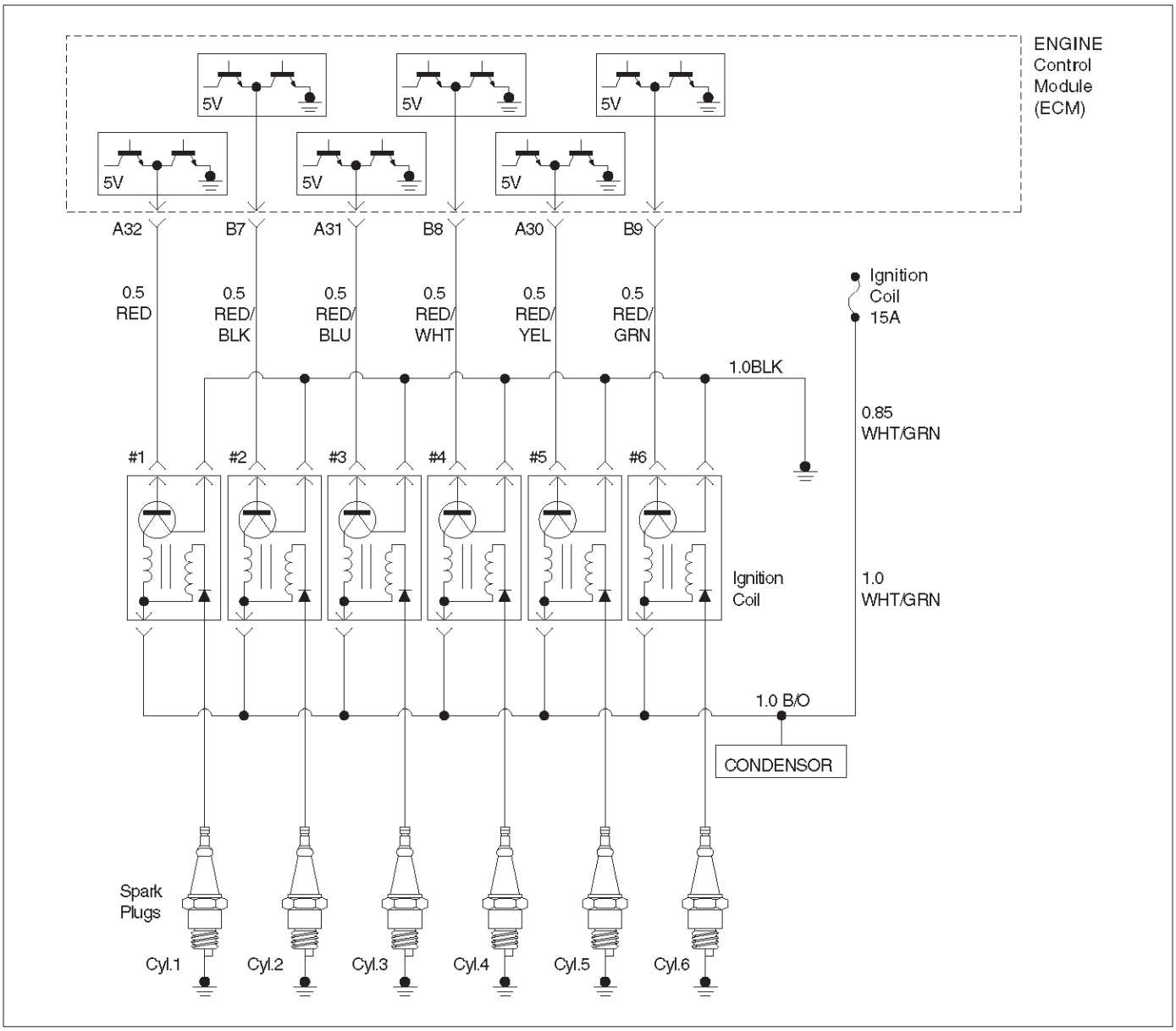

060RW075

Circuit Description

The engine control module's (ECM) control circuit 3 provides a zero-volt or a 5-volt output signal to the ignition coil. The normal voltage on the circuit is zero volts. When the ignition coil receives the 5-volt signal from the ECM, it provides a ground path for the B+ supply to the primary side of the number 3 ignition coil. When the ECM shuts off the 5 volts to the ignition coil, the ignition coil turns "OFF." This causes the ignition coil primary magnetic field to collapse, producing a voltage in the secondary coil which fires the spark plug.

The circuit between the ECM and ignition coil is monitored for an open circuit, short to voltage, and short to ground. When the ECM detects a problem on ignition control circuit 3, it will set a DTC P0353.

Conditions for Setting the DTC

- The ignition is "ON."
- The engine is turning, determined by the crankshaft position input signal.
- Engine running speed is between 200 r.p.m and 850 r.p.m.
- Spark signal don't present 6 samples of continuous.

Action Taken When the DTC Sets

- The ECM will illuminate the malfunction indicator lamp (MIL) the first time the fault is detected.
- The ECM will store conditions which were present when the DTC was set as Freeze Frame and in the Failure Records data.

Conditions for Clearing the MIL/DTC

- The ECM will turn the MIL "OFF" on the third consecutive trip cycle in which the diagnostic has been run and the fault condition is no longer present.
- A history DTC P0353 will clear after 40 consecutive warm-up cycles occur without a fault.

- DTC P0353 can be cleared by using the Tech 2 “Clear Info” function or by disconnecting the ECM battery feed.

Diagnostic Aids

Check for the following conditions:

- Poor connection at ECM – Inspect the harness connectors for backed-out terminals, improper mating, broken locks, improperly formed or damaged terminals, and poor terminal-to-wire connections.
- Damaged harness – Inspect the wiring harness for damage. If the harness appears to be OK, observe the Tech 2 display related to DTC P0353 while moving the connector and wiring related to the ignition system. A change in the display will indicate the location of the fault.

Reviewing the Failure Records vehicle mileage since the diagnostic test last failed may help determine how often the condition that caused the DTC to be set occurs. This may assist in diagnosing the condition.

DTC P0353 – Ignition 3 Control Circuit

Step	Action	Value(s)	Yes	No
1	Was the “On-Board Diagnostic (OBD) System Check” performed?	—	Go to *Step 2*	Go to *OBD System Check*
2	1. Ignition “ON,” engine “OFF.” 2. Review and record Tech 2 Failure Records data. 3. Operate the vehicle within Failure Record conditions as noted. 4. Use a Tech 2 to monitor the “DTC” information for DTC P0353 until the DTC P0353 test runs. 5. Note the test result. Does the Tech 2 indicate DTC P0353 failed this ignition cycle?	—	Go to *Step 3*	Go to *Diagnostic Aids*
3	Check for faulty connection at ignition coil. Was a problem found?	—	Verify repair	Go to *Step 4*
4	Check for faulty connection at ECM connector. Was a problem found?	—	Verify repair	Go to *Step 5*
5	1. Ignition “ON,” engine “OFF.” 2. Back probe the ignition control circuit 3 at the ECM with a DVM. Is the voltage near the specified value?	25-55 mV	Go to *Step 6*	Go to *Step 9*
6	1. Ignition “ON,” engine running. 2. Back probe the ignition control circuit at the ECM for the cylinder being tested. Is the voltage in the specified range, rapidly toggling back and forth to a reading 20-50 mV higher?	100-180 mV	Go to *Step 7*	Go to *Step 13*
7	1. Ignition “OFF.” 2. Disconnect the 3-pin and 5-pin connectors at the ignition coil. 3. Check ignition control circuit 3 voltage at the ignition coil connector while cranking the engine. Does the voltage measure between the specified values?	200-1200 mV	Go to *Step 8*	Go to *Step 11*
8	Replace the ignition coil. Is the action complete?	—	Verify repair	—
9	1. Ignition “OFF.” 2. Disconnect the ECM and the ignition coil. 3. Check ignition control circuit 3 for short to ground. Was a problem found?	—	Verify repair	Go to *Step 10*

DTC P0353 – Ignition 3 Control Circuit (Cont'd)

Step	Action	Value(s)	Yes	No
10	Check ignition control circuit 3 for short to voltage. Was a problem found?	—	Verify repair	Go to *Step 13*
11	Check for an open ignition control circuit 3. Was the ignition control circuit open?	—	Go to *Step 12*	Go to *Step 13*
12	Repair the open ignition control circuit. Is the action complete?	—	Verify repair	—
13	Replace the ECM. Is the action complete?	—	Verify repair	—

Diagnostic Trouble Code (DTC) P0354 (Flash DTC=42) Ignition 4 Control Circuit

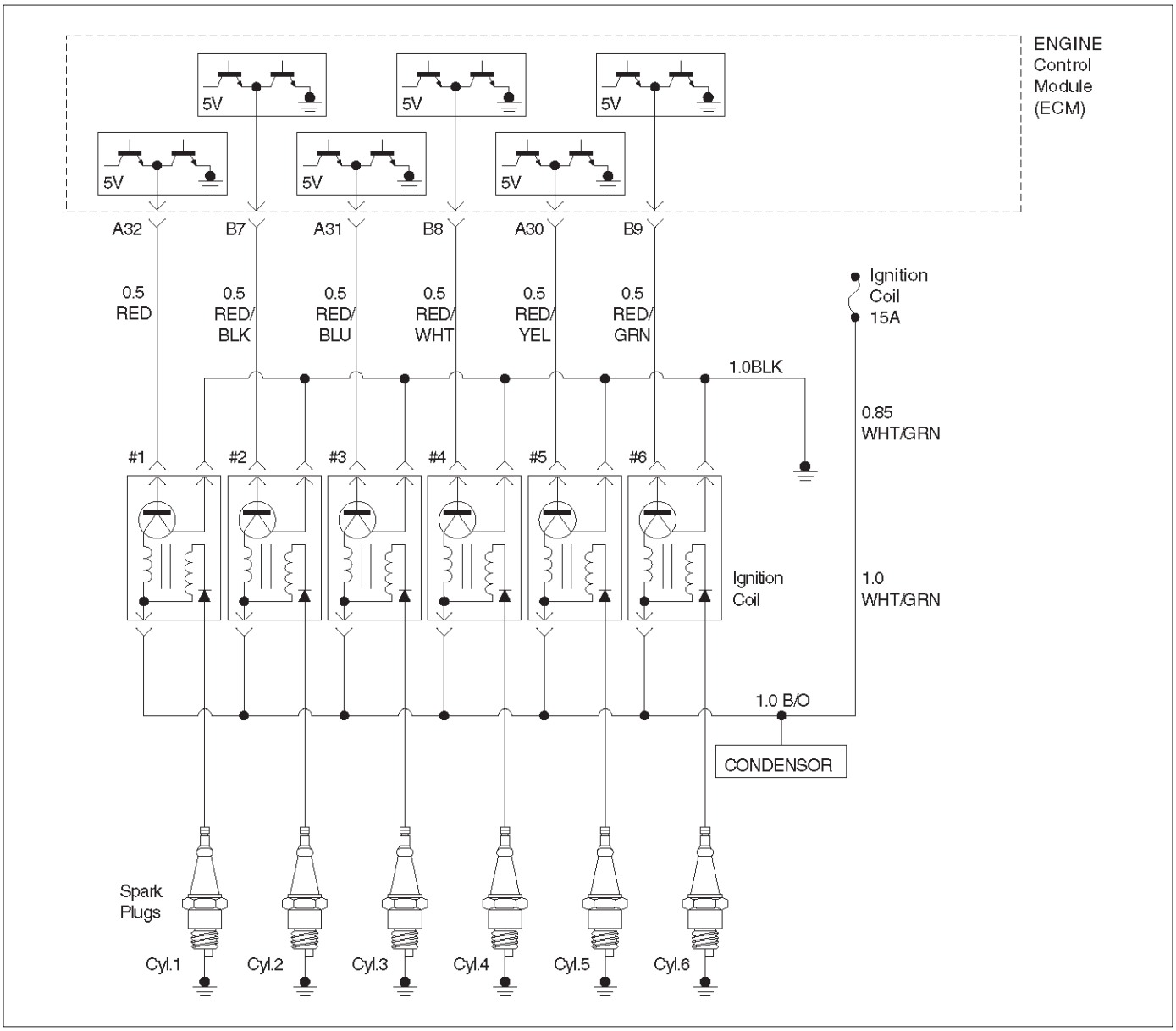

060RW075

Circuit Description

The engine control module's (ECM) control circuit 4 provides a zero-volt or a 5-volt output signal to the ignition coil. The normal voltage on the circuit is zero volts. When the ignition coil receives the 5-volt signal from the ECM, it provides a ground path for the B+ supply to the primary side of the number 4 ignition coil. When the ECM shuts off the 5 volts to the ignition coil, the ignition coil turns "OFF." This causes the ignition coil primary magnetic field to collapse, producing a voltage in the secondary coil which fires the spark plug.

The circuit between the ECM and ignition coil is monitored for an open circuit, short to voltage, and short to ground. When the ECM detects a problem on ignition control circuit 4, it will set a DTC P0354.

Conditions for Setting the DTC

- The ignition is "ON."
- The engine is turning, determined by the crankshaft position input signal.
- Engine running speed is between 200 r.p.m and 850 r.p.m.
- Spark signal don't present 6 samples of continuous.

Action Taken When the DTC Sets

- The ECM will illuminate the malfunction indicator lamp (MIL) the first time the fault is detected.
- The ECM will store conditions which were present when the DTC was set as Freeze Frame and in the Failure Records data.

Conditions for Clearing the MIL/DTC

- The ECM will turn the MIL "OFF" on the third consecutive trip cycle in which the diagnostic has been run and the fault condition is no longer present.
- A history DTC P0354 will clear after 40 consecutive warm-up cycles occur without a fault.

- DTC P0354 can be cleared by using the Tech 2 “Clear Info” function or by disconnecting the ECM battery feed.

Diagnostic Aids

Check for the following conditions:

- Poor connection at ECM – Inspect the harness connectors for backed-out terminals, improper mating, broken locks, improperly formed or damaged terminals, and poor terminal-to-wire connections.
- Damaged harness – Inspect the wiring harness for damage. If the harness appears to be OK, observe the Tech 2 display related to DTC P0354 while moving the connector and wiring related to the ignition system. A change in the display will indicate the location of the fault.

Reviewing the Failure Records vehicle mileage since the diagnostic test last failed may help determine how often the condition that caused the DTC to be set occurs. This may assist in diagnosing the condition.

DTC P0354 – Ignition 4 Control Circuit

Step	Action	Value(s)	Yes	No
1	Was the “On-Board Diagnostic (OBD) System Check” performed?	—	Go to *Step 2*	Go to *OBD System Check*
2	1. Ignition “ON,” engine “OFF.” 2. Review and record Tech 2 Failure Records data. 3. Operate the vehicle within Failure Record conditions as noted. 4. Use a Tech 2 to monitor the “DTC” information for DTC P0354 until the DTC P0354 test runs. 5. Note the test result. Does the Tech 2 indicate DTC P0354 failed this ignition cycle?	—	Go to *Step 3*	Go to *Diagnostic Aids*
3	Check for faulty connection at ignition coil. Was a problem found?	—	Verify repair	Go to *Step 4*
4	Check for faulty connection at ECM connector. Was a problem found?	—	Verify repair	Go to *Step 5*
5	1. Ignition “ON,” engine “OFF.” 2. Back probe the ignition control circuit 4 at the ECM with a DVM. Is the voltage near the specified value?	25-55 mV	Go to *Step 6*	Go to *Step 9*
6	1. Ignition “ON,” engine running. 2. Back probe the ignition control circuit at the ECM for the cylinder being tested. Is the voltage in the specified range, rapidly toggling back and forth to a reading 20-50 mV higher?	100-180 mV	Go to *Step 7*	Go to *Step 13*
7	1. Ignition “OFF.” 2. Disconnect the 3-pin and 5-pin connectors at the ignition coil. 3. Check ignition control circuit 4 voltage at the ignition coil connector while cranking the engine. Does the voltage measure between the specified values?	200-1200 mV	Go to *Step 8*	Go to *Step 11*
8	Replace the ignition coil. Is the action complete?	—	Verify repair	—
9	1. Ignition “OFF.” 2. Disconnect the ECM and the ignition coil. 3. Check ignition control circuit 4 for short to ground. Was a problem found?	—	Verify repair	Go to *Step 10*

DTC P0354 – Ignition 4 Control Circuit (Cont'd)

Step	Action	Value(s)	Yes	No
10	Check ignition control circuit 4 for short to voltage. Was a problem found?	—	Verify repair	Go to *Step 13*
11	Check for an open ignition control circuit 4. Was the ignition control circuit open?	—	Go to *Step 12*	Go to *Step 13*
12	Repair the open in ignition control circuit. Is the action complete?	—	Verify repair	—
13	Replace the ECM. Is the action complete?	—	Verify repair	—

Diagnostic Trouble Code (DTC) P0355 (Flash DTC=42) Ignition 5 Control Circuit

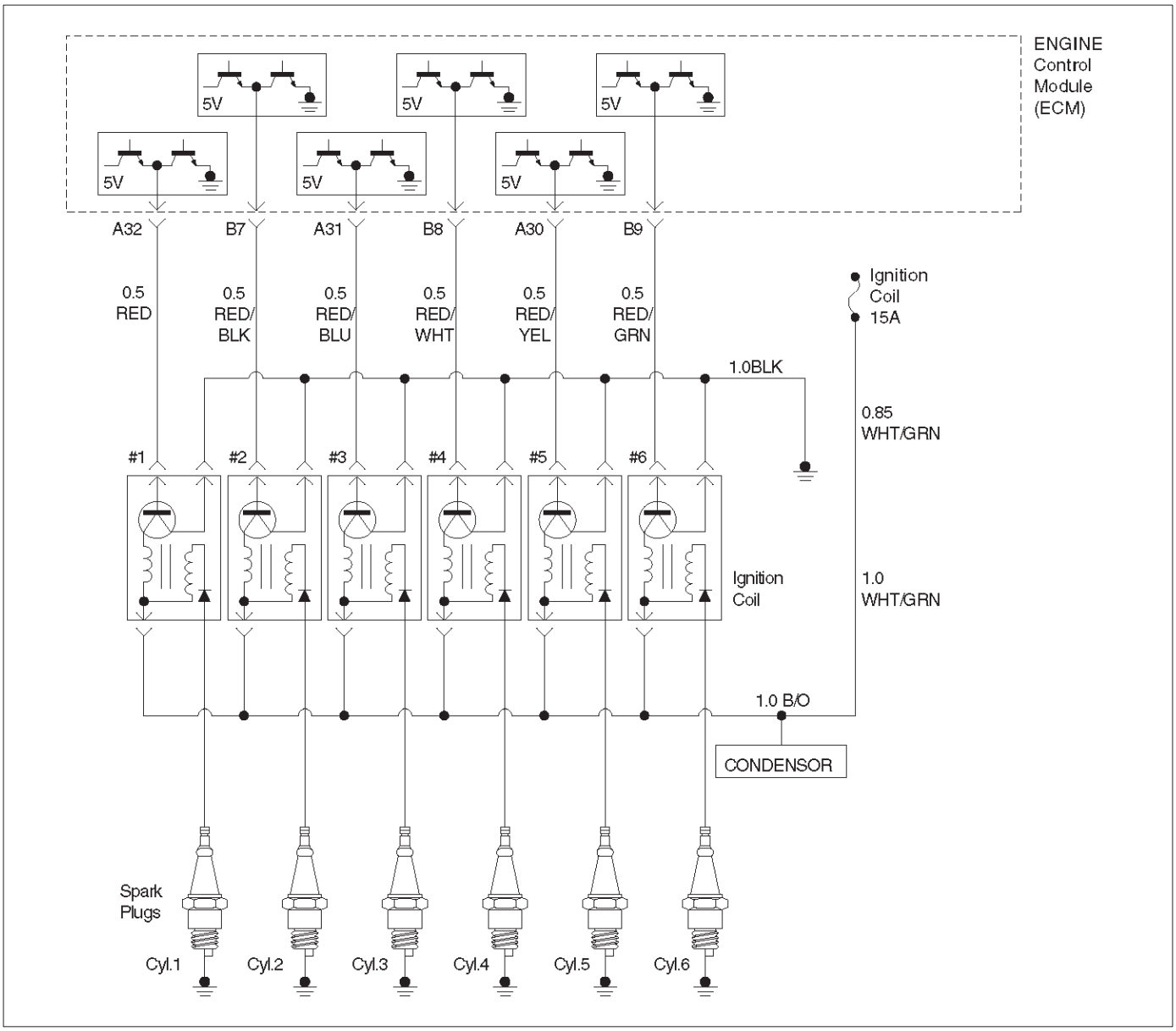

060RW075

Circuit Description

The engine control module's (ECM) control circuit 5 provides a zero-volt or a 5-volt output signal to the ignition coil. The normal voltage on the circuit is zero volts. When the ignition coil receives the 5-volt signal from the ECM, it provides a ground path for the B+ supply to the primary side of the number 5 ignition coil. When the ECM shuts off the 5 volts to the ignition coil, the ignition coil turns "OFF." This causes the ignition coil primary magnetic field to collapse, producing a voltage in the secondary coil which fires the spark plug.

The circuit between the ECM and ignition coil is monitored for an open circuit, short to voltage, and short to ground. When the ECM detects a problem on ignition control circuit 5, it will set a DTC P0355.

Conditions for Setting the DTC

- The ignition is "ON."
- The engine is turning, determined by the crankshaft position input signal.
- Engine running speed is between 200 r.p.m and 850 r.p.m.
- Spark signal don't present 6 samples of continuous.

Action Taken When the DTC Sets

- The ECM will illuminate the malfunction indicator lamp (MIL) the first time the fault is detected.
- The ECM will store conditions which were present when the DTC was set as Freeze Frame and in the Failure Records data.

Conditions for Clearing the MIL/DTC

- The ECM will turn the MIL "OFF" on the third consecutive trip cycle in which the diagnostic has been run and the fault condition is no longer present.
- A history DTC P0355 will clear after 40 consecutive warm-up cycles occur without a fault.

- DTC P0355 can be cleared by using the Tech 2 “Clear Info” function or by disconnecting the ECM battery feed.

Diagnostic Aids

Check for the following conditions:

- Poor connection at ECM – Inspect the harness connectors for backed-out terminals, improper mating, broken locks, improperly formed or damaged terminals, and poor terminal-to-wire connections.
- Damaged harness – Inspect the wiring harness for damage. If the harness appears to be OK, observe the Tech 2 display related to DTC P0355 while moving the connector and wiring related to the ignition system. A change in the display will indicate the location of the fault.

Reviewing the Failure Records vehicle mileage since the diagnostic test last failed may help determine how often the condition that caused the DTC to be set occurs. This may assist in diagnosing the condition.

DTC P0355 – Ignition 5 Control Circuit

Step	Action	Value(s)	Yes	No
1	Was the “On-Board Diagnostic (OBD) System Check” performed?	—	Go to *Step 2*	Go to *OBD System Check*
2	1. Ignition “ON,” engine “OFF.” 2. Review and record Tech 2 Failure Records data. 3. Operate the vehicle within Failure Record conditions as noted. 4. Use a Tech 2 to monitor the “DTC” information for DTC P0355 until the DTC P0355 test runs. 5. Note the test result. Does the Tech 2 indicate DTC P0355 failed this ignition cycle?	—	Go to *Step 3*	Go to *Diagnostic Aids*
3	Check for faulty connection at ignition coil. Was a problem found?	—	Verify repair	Go to *Step 4*
4	Check for faulty connection at ECM connector. Was a problem found?	—	Verify repair	Go to *Step 5*
5	1. Ignition “ON,” engine “OFF.” 2. Back probe the ignition control circuit 5 at the ECM with a DVM. Is the voltage near the specified value?	25-55 mV	Go to *Step 6*	Go to *Step 9*
6	1. Ignition “ON,” engine running. 2. Back probe the ignition control circuit at the ECM for the cylinder being tested. Is the voltage in the specified range, rapidly toggling back and forth to a reading 20-50 mV higher?	100-180 mV	Go to *Step 7*	Go to *Step 13*
7	1. Ignition “OFF.” 2. Disconnect the 3-pin and 5-pin connectors at the ignition coil. 3. Check ignition control circuit 5 voltage at the ignition coil connector while cranking the engine. Does the voltage measure between the specified values?	200-1200 mV	Go to *Step 8*	Go to *Step 11*
8	Replace the ignition coil. Is the action complete?	—	Verify repair	—
9	1. Ignition “OFF.” 2. Disconnect the ECM and the ignition coil. 3. Check ignition control circuit 5 for short to ground. Was a problem found?	—	Verify repair	Go to *Step 10*

DTC P0355 – Ignition 5 Control Circuit (Cont'd)

Step	Action	Value(s)	Yes	No
10	Check ignition control circuit 5 for short to voltage. Was a problem found?	—	Verify repair	Go to *Step 13*
11	Check for an open ignition control circuit 5. Was the ignition control circuit open?	—	Go to *Step 12*	Go to *Step 13*
12	Repair the open ignition control circuit. Is the action complete?	—	Verify repair	—
13	Replace the ECM. Is the action complete?	—	Verify repair	—

Diagnostic Trouble Code (DTC) P0356 (Flash DTC=42) Ignition 6 Control Circuit

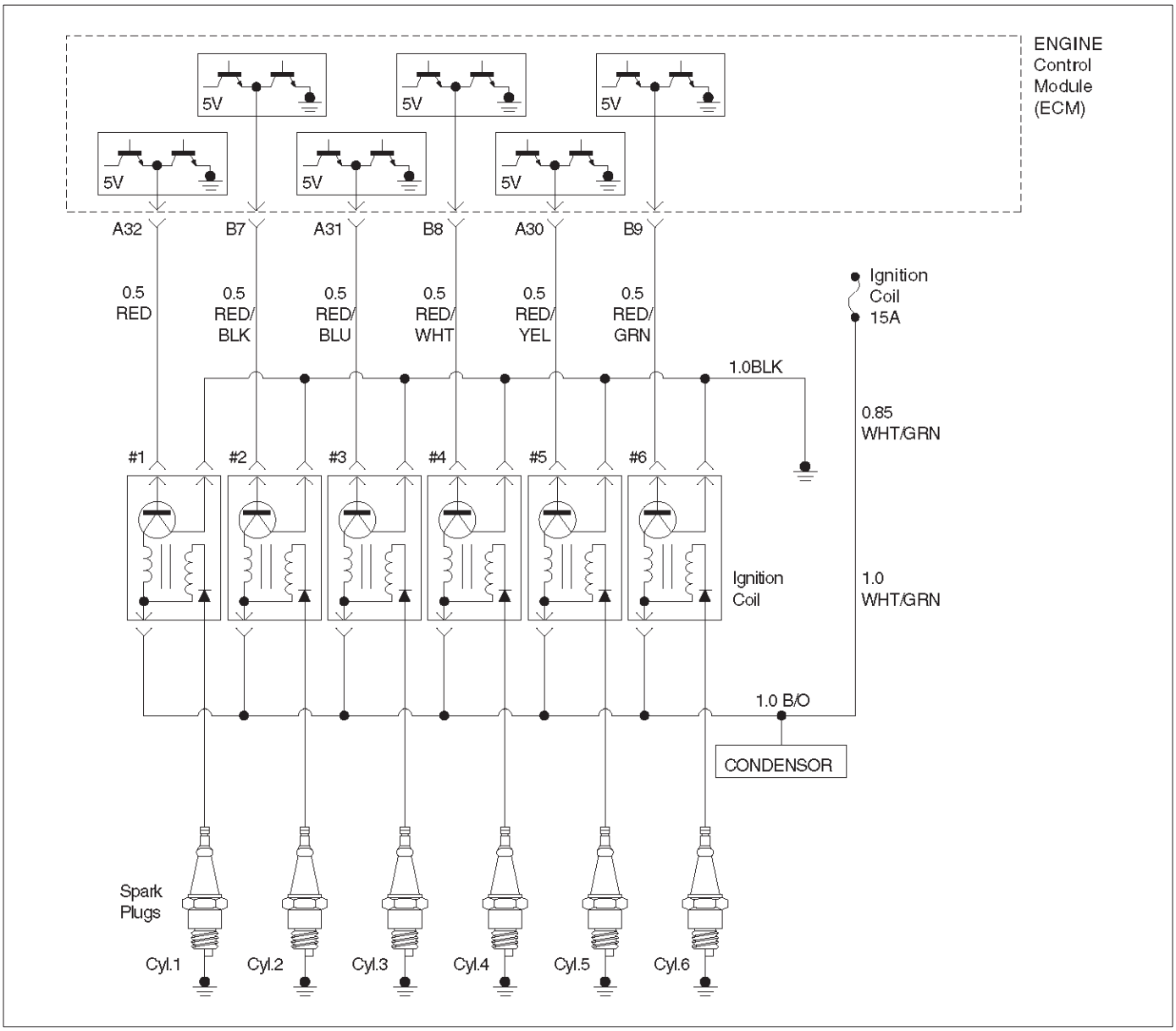

060RW075

Circuit Description

The engine control module's (ECM) control circuit 6 provides a zero-volt or a 5-volt output signal to the ignition coil. The normal voltage on the circuit is zero volts. When the ignition coil receives the 5-volt signal from the ECM, it provides a ground path for the B+ supply to the primary side of the number 6 ignition coil. When the ECM shuts off the 5 volts to the ignition coil, the ignition coil turns "OFF." This causes the ignition coil primary magnetic field to collapse, producing a voltage in the secondary coil which fires the spark plug.

The circuit between the ECM and ignition coil is monitored for an open circuit, short to voltage, and short to ground. When the ECM detects a problem on ignition control circuit 6, it will set a DTC P0356.

Conditions for Setting the DTC

- The ignition is "ON."
- The engine is turning, determined by the crankshaft position input signal.
- Engine running speed is between 200 r.p.m and 850 r.p.m.
- Spark signal don't present 6 samples of continuous.

Action Taken When the DTC Sets

- The ECM will illuminate the malfunction indicator lamp (MIL) the first time the fault is detected.
- The ECM will store conditions which were present when the DTC was set as Freeze Frame and in the Failure Records data.

Conditions for Clearing the MIL/DTC

- The ECM will turn the MIL "OFF" on the third consecutive trip cycle in which the diagnostic has been run and the fault condition is no longer present.
- A history DTC P0356 will clear after 40 consecutive warm-up cycles occur without a fault.

- DTC P0356 can be cleared by using the Tech 2 “Clear Info” function or by disconnecting the ECM battery feed.

Diagnostic Aids

Check for the following conditions:

- Poor connection at ECM – Inspect the harness connectors for backed-out terminals, improper mating, broken locks, improperly formed or damaged terminals, and poor terminal-to-wire connections.
- Damaged harness – Inspect the wiring harness for damage. If the harness appears to be OK, observe the Tech 2 display related to DTC P0356 while moving the connector and wiring related to the ignition system. A change in the display will indicate the location of the fault.

Reviewing the Failure Records vehicle mileage since the diagnostic test last failed may help determine how often the condition that caused the DTC to be set occurs. This may assist in diagnosing the condition.

DTC P0356 – Ignition 6 Control Circuit

Step	Action	Value(s)	Yes	No
1	Was the “On-Board Diagnostic (OBD) System Check” performed?	—	Go to *Step 2*	Go to *OBD System Check*
2	1. Ignition “ON,” engine “OFF.” 2. Review and record Tech 2 Failure Records data. 3. Operate the vehicle within Failure Record conditions as noted. 4. Use a Tech 2 to monitor the “DTC” information for DTC P0356 until the DTC P0356 test runs. 5. Note the test result. Does the Tech 2 indicate DTC P0356 failed this ignition cycle?	—	Go to *Step 3*	Go to *Diagnostic Aids*
3	Check for faulty connection at ignition coil. Was a problem found?	—	Verify repair	Go to *Step 4*
4	Check for faulty connection at ECM connector. Was a problem found?	—	Verify repair	Go to *Step 5*
5	1. Ignition “ON,” engine “OFF.” 2. Back probe the ignition control circuit 6 at the ECM with a DVM. Is the voltage near the specified value?	25-55 mV	Go to *Step 6*	Go to *Step 9*
6	1. Ignition “ON,” engine running. 2. Back probe the ignition control circuit at the ECM for the cylinder being tested. Is the voltage in the specified range, rapidly toggling back and forth to a reading 20-50 mV higher?	100-180 mV	Go to *Step 7*	Go to *Step 13*
7	1. Ignition “OFF.” 2. Disconnect the 3-pin and 5-pin connectors at the ignition coil. 3. Check ignition control circuit 6 voltage at the ignition coil connector while cranking the engine. Does the voltage measure between the specified values?	200-1200 mV	Go to *Step 8*	Go to *Step 11*
8	Replace the ignition coil. Is the action complete?	—	Verify repair	—
9	1. Ignition “OFF.” 2. Disconnect the ECM and the ignition coil. 3. Check ignition control circuit 6 for short to ground. Was a problem found?	—	Verify repair	Go to *Step 10*

DTC P0356 – Ignition 6 Control Circuit (Cont'd)

Step	Action	Value(s)	Yes	No
10	Check ignition control circuit 6 for short to voltage. Was a problem found?	—	Verify repair	Go to *Step 13*
11	Check for an open ignition control circuit 6. Was the ignition control circuit open?	—	Go to *Step 12*	Go to *Step 13*
12	Repair the open ignition control circuit. Is the action complete?	—	Verify repair	—
13	Replace the ECM. Is the action complete?	—	Verify repair	—

Diagnostic Trouble Code (DTC) P0502 (Flash DTC=24) VSS No Signal

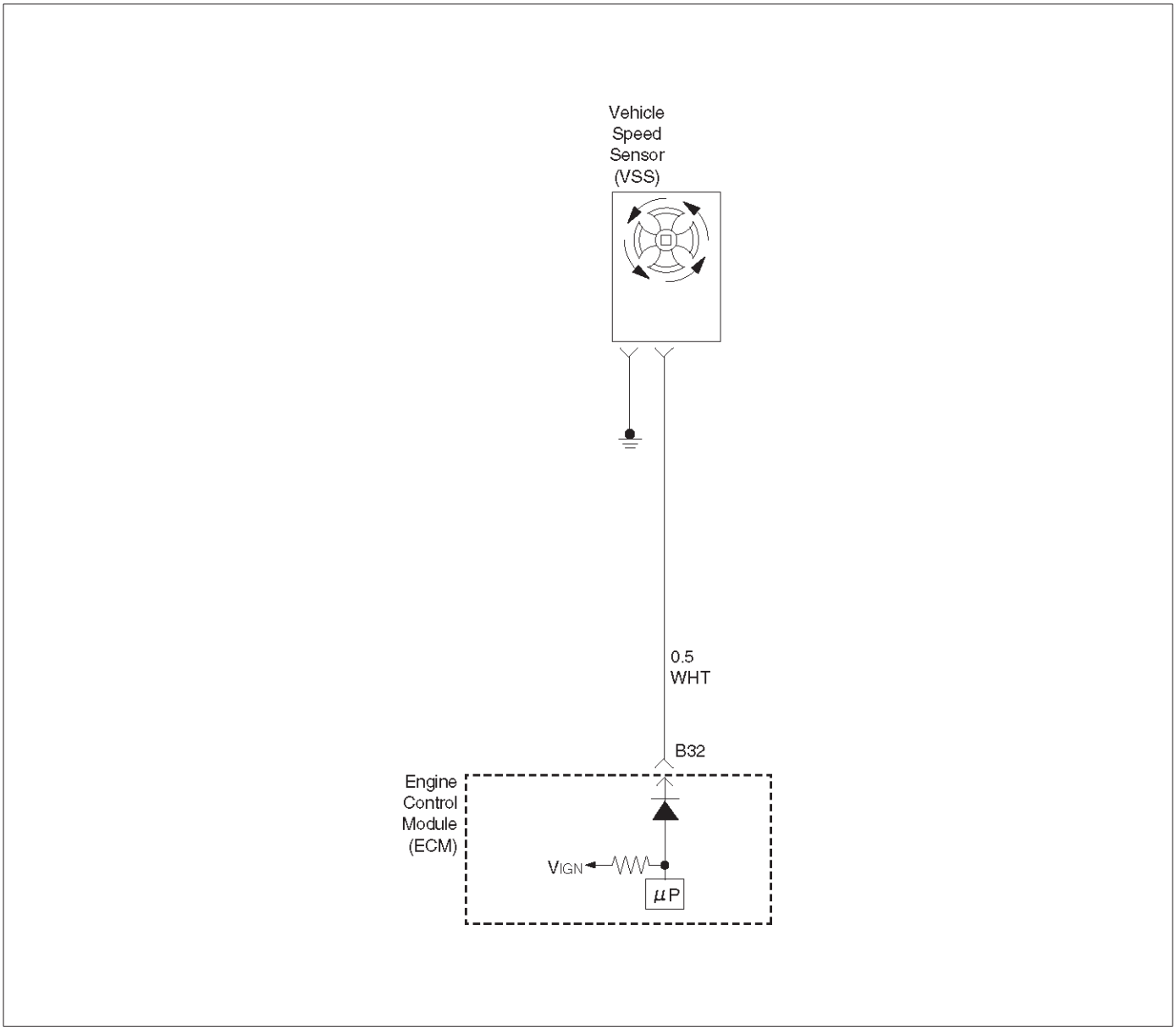

060RW052

Circuit Description

The vehicle speed sensor has a magnet rotated by the transmission output shaft. Attached to the sensor is a hall effect circuit the interacts with the magnetic field treated by the rotating magnet. A 12-volt operating supply for the speed sensor hall circuit is supplied from the meter fuse. The VSS pulses to ground the 9-volt signal sent from the engine control module (ECM) on the reference circuit. The ECM interprets vehicle speed by the number of pulses to ground per second on the reference circuit.

Conditions for Setting the DTC

- Engine is running.
- Engine speed is below 5000 RPM.
- Fuel is cutting.
- Vehicle speed is below 1Km/H for more than 4 second.

Action Taken When the DTC Sets

- The ECM will illuminate the malfunction indicator lamp (MIL) the first time the fault is detected.
- The ECM will store conditions which were present when the DTC was set as Freeze Frame and in the Failure Records data.

Conditions for Clearing the MIL/DTC

- The ECM will turn the MIL “OFF” on the third consecutive trip cycle during which the diagnostic has been run and the fault condition is no longer present.
- A history DTC P0502 will clear after 40 consecutive warm-up cycles have occurred without a fault.
- DTC P0502 can be cleared by using the Tech 2 “Clear Info” function or by disconnecting the ECM battery feed.

Test Description

Number(s) below refer to the step number(s) on the Diagnostic Chart.

9. To avoid backprobing the VSS and possibly damaging a seal or terminal, the VSS output can be tested at the point where the transmission harness connected to the engine harness. The green 16-way connector is adjacent to a blue 16-way connector, and it can be easily accessed by removing the air cleaner assembly. The green 16-way connector is separated, and battery voltage is applied to the VSS through the yellow wire at one corner of the connector. The VSS output can be monitored with a DVM connected to the blue wire with a black tracer. The two wires are next to each other in the 16-way connector . The test connections are made on the transmission side of the connector, the side that is not clipped to the body sheetmetal.

14. The speedometer-to-ECM VSS signal wire is spliced to a wire leading to the cruise control module. If a short to ground or voltage is found between the ECM and speedometer, it could be located between the splice and the cruise control module.

DTC P0502 –VSS Circuit Low Input

Step	Action	Value(s)	Yes	No
1	Was the “On-Board Diagnostic (OBD) System Check” performed?	—	Go to *Step 2*	Go to *OBD System Check*
2	Does the speedometer work?	—	Go to *Step 10*	Go to *Step 3*
3	1. Disconnect the VSS connector. 2. Ignition “ON.” 3. Using a test light to battery +, probe the connector ground wire. Did the light illuminate?	—	Go to *Step 5*	Go to *Step 4*
4	Repair the sensor ground. Is the action complete?	—	Verify repair	—
5	1. Ignition “ON,” sensor disconnected. 2. Using a DVM, measure at the VSS connector between ground and voltage supply. Was the measurement near the specified value?	Battery voltage	Go to *Step 7*	Go to *Step 6*
6	Repair the open or short to ground which may have blown the meter fuse. Is the action complete?	—	Verify repair	—
7	1. Ignition “ON,” VSS disconnected. 2. Using a DVM, measure at the VSS connector between ground and the blue/black wire from the speedometer. Was the measurement near the specified value?	7.5-8 V	Go to *Step 9*	Go to *Step 8*
8	Check for an open or short circuit between the speedometer and the VSS. Was an open or short circuit located?	—	Verify repair	Go to *Step 9*
9	Replace the speedometer. Is the action complete?	—	Verify repair	—

DTC P0502 –VSS Circuit Low Input (Cont'd)

Step	Action	Value(s)	Yes	No
10	1. Ignition "OFF." 2. Disconnect the MAF sensor and remove the air cleaner assembly and filter element to gain access to the 16-way green connector located immediately to the rear of the left front headlamp. The connector attaches the VSS wires from the transmission harness to the left-side engine harness. 3. Disconnect the green 16-way connector. 4. Select a terminal adapter from kit 5-8840-0385-0 that can be used with a jumper to supply B+ to the yellow (transmission side of the connector). There are 2 yellow wires at that connector, but the correct one is in the corner position. 5. Use another terminal adapter to attach a voltmeter to the blue wire with a black tracer (next to the wire in the previous step.) 6. At the transmission side of the green 16-way connector, locate the black wire next to the VSS yellow ign+ wire. The black wire is the VSS ground wire. Use a terminal adapter to attach a jumper to ground to the black VSS ground wire at the transmission side of the connector. 7. Raise the rear wheels off the ground with transmission in neutral. Does the DVM toggle back and forth between 0.6 V and 10 V as the wheels (and driveshaft) are rotated?	—	Go to *Step 12*	Go to *Step 11*
11	Replace the VSS. Is the action complete?	—	Verify repair	—
12	Check for an open or short between the ECM and the speedometer. Was a problem found?	—	Verify repair	Go to *Step 13*
13	Replace the ECM. Is the action complete?	—	Verify repair	—

Diagnostic Trouble Code (DTC) P0562 (Flash DTC=66) System Voltage Low

Circuit Description

The engine control module (ECM) monitors the system voltage on the ignition feed terminals to the ECM. A system voltage DTC will set whenever the voltage is above a calibrated value.

Conditions for Setting the DTC

- Engine is running.
- System voltage is below 6 volts for more than 20 second.

Action Taken When the DTC Sets

- The ECM will not illuminate the malfunction indicator lamp (MIL).
- The ECM will store as Failure Records only conditions which were present when the DTC was set. This information will not be stored as Freeze Frame data.

Conditions for Clearing the MIL/DTC

- A history DTC P0563 will clear after 40 consecutive warm-up cycles have occurred without a fault.
- DTC P0563 can be cleared by using the Tech 2 “Clear Info” function or by disconnecting the ECM battery feed.

Diagnostic Aids

If the DTC sets when an accessory is operated, check for a poor connection or defective accessory.

DTC P0562 – System Voltage Low

Step	Action	Value(s)	Yes	No
1	Was the “On-Board Diagnostic (OBD) System Check” performed?	—	Go to *Step 2*	Go to *OBD System Check*
2	Using a DVM, measure the battery voltage at the battery. Is the battery voltage greater than the specified value?	11.5 V	Go to *Step 3*	Charge battery, then go to *Step 3*
3	1. Install a Tech 2. 2. Select “Ignition Volts” on the Tech 2. 3. Start the engine and raise the engine speed to the specified value. 4. Load the electrical system by turning on the headlights, high blower, etc. Is the ignition voltage approximately equal to the specified value?	2000 RPM 12.8-14.1 V	Go to *Step 4*	Go to *Starting/Charging*
4	1. Ignition “OFF.” 2. Disconnect the ECM connector at the ECM. 3. Using a DVM, measure the battery voltage at the ECM connector. Is it approximately equal to battery voltage?	—	Check for excessive current draw with ignition “OFF,” engine “OFF.”	Go to *Step 5*
5	1. Check for faulty connections at the ECM harness terminals. 2. Repair as necessary. Was a repair necessary?	—	Verify repair	Go to *Step 6*
6	Check for an open battery feed circuit to the ECM. Is the action complete?	—	Verify repair	Go to *Step 7*
7	Replace the ECM. Is the action complete?	—	Verify repair	—

Diagnostic Trouble Code (DTC) P0563 (Flash DTC=66) System Voltage High

Circuit Description

The engine control module (ECM) monitors the system voltage on the ignition feed terminals to the ECM. A system voltage DTC will set whenever the voltage is above a calibrated value.

Conditions for Setting the DTC

- Engine is running.
- System voltage is above 16 volts for more than 20 second.

Action Taken When the DTC Sets

- The ECM will not illuminate the malfunction indicator lamp (MIL).
- The ECM will store as Failure Records only conditions which were present when the DTC was set. This information will not be stored as Freeze Frame data.

Conditions for Clearing the MIL/DTC

- A history DTC P0563 will clear after 40 consecutive warm-up cycles have occurred without a fault.
- DTC P0563 can be cleared by using the Tech 2 “Clear Info” function or by disconnecting the ECM battery feed.

Diagnostic Aids

If the DTC sets when an accessory is operated, check for a poor connection or defective accessory.

DTC P0563 – System Voltage High

Step	Action	Value(s)	Yes	No
1	Was the “On-Board Diagnostic (OBD) System Check” performed?	—	Go to *Step 2*	Go to *OBD System Check*
2	Using a DVM, measure the battery voltage at the battery. Is the battery voltage less than the specified value?	11.5 V	Go to *Step 3*	Go to *Step 4*
3	1. Charge the battery and clean the battery terminals. 2. Clean the battery ground cable connection if corrosion is indicated. Is the battery voltage less than the specified value?	11.5 V	Replace battery	Go to *Step 4*
4	1. Turn “OFF” all the accessories. 2. Install a Tech 2. 3. Select the ignition voltage parameter on the Tech 2. 4. Start the engine and raise the engine RPM to the specified value. Is the voltage more than 2.5 volts greater than the measurement taken in step 2 or 3?	2000 RPM	Go to *Starting/Charging*	Go to *Step 5*
5	Replace the ECM. Is the action complete?	—	Verify repair	—

Diagnostic Trouble Code (DTC) P0601 (Flash DTC=51) ECM Memory

Circuit Description

The engine control module (ECM) used in this vehicle utilizes an electrically erasable programmable read-only memory (EEPROM). The EEPROM contains program information and the calibrations required for engine, transmission, and engine diagnostics operation.
Unlike the PROM used in past applications, the EEPROM is not replaceable.

Conditions for Setting the DTC

- The ECM detects an internal program fault (check sum error).
- Ignition “ON”.

Action Taken When the DTC Sets

- The ECM will not illuminate the malfunction indicator lamp (MIL).
- The ECM will store conditions which were present when the DTC was set in the Failure Records data only.

Conditions for Clearing the MIL/DTC

- The ECM will turn the MIL “OFF” on the third consecutive trip cycle during which the diagnostic has been run and the fault condition is no longer present.
- A history DTC P0601 will clear after 40 consecutive warm-up cycles have occurred without a fault.
- DTC P0601 can be cleared by using the Tech 2 “Clear Info” function or by disconnecting the ECM battery feed.

Diagnostic Aids

- DTC P0601 indicates that the contents of the EEPROM have changed since the ECM was programmed. The only possible repair is ECM replacement.

DTC P0601 – ECM Memory

Step	Action	Value(s)	Yes	No
1	Was the “On-Board Diagnostic (OBD) System Check” performed?	—	Go to *Step 2*	Go to *OBD System Check*
2	Replace the ECM. Is the action complete?	—	Verify repair	—

Diagnostic Trouble Code (DTC) P1171 (Flash DTC=44) Fuel System Lean Dueing Acceleration

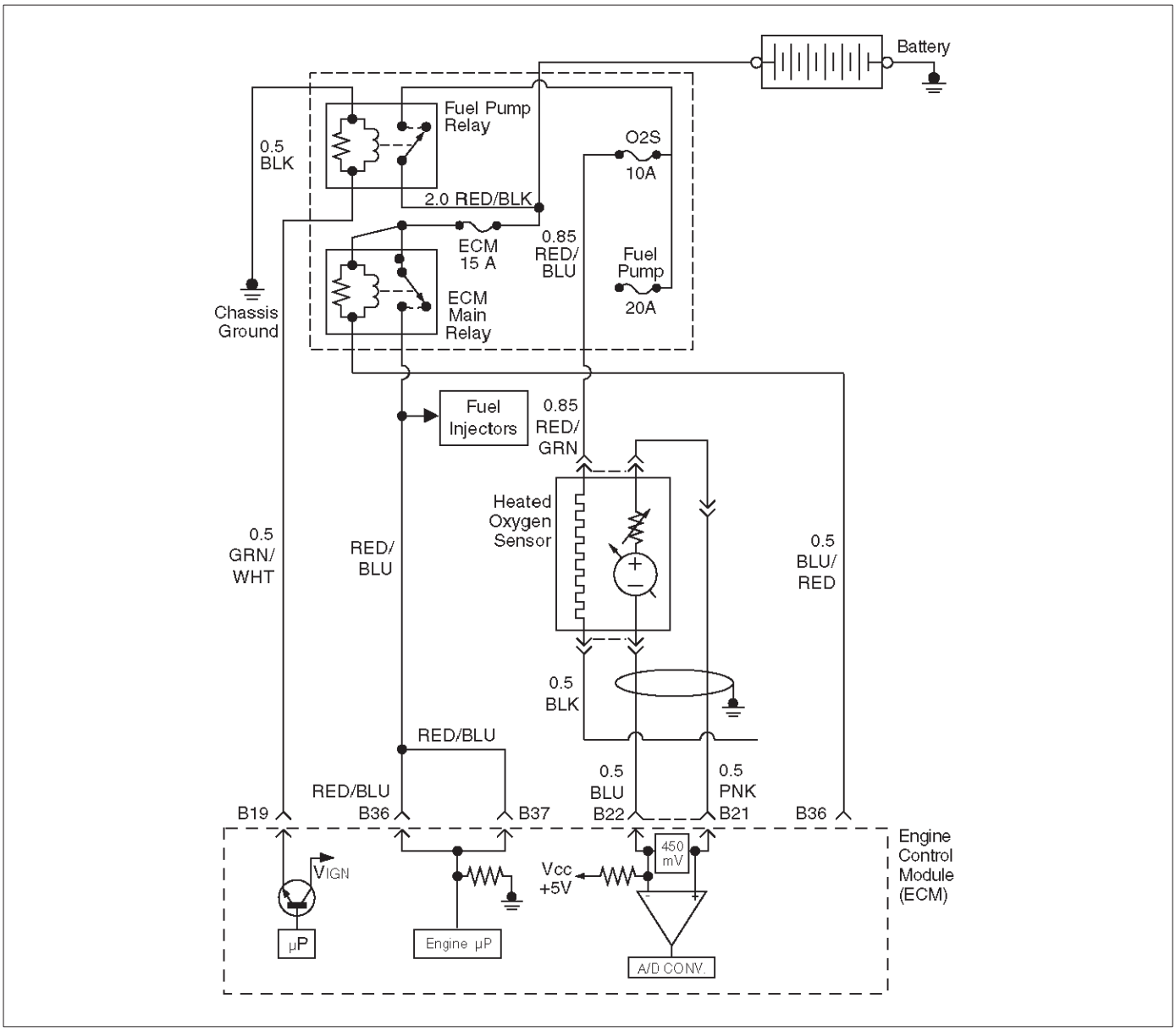

060RW053

Circuit Description

The engine control module (ECM) internal circuitry can identify if the vehicle fuel system is capable of supplying adequate amounts of fuel during heavy acceleration (power enrichment). The ECM monitors the voltage of the oxygen sensor during power enrichment. When a power enrichment mode of operation is requested during “closed loop” operation (by heavy acceleration), the ECM will provide more fuel to the engine. Under these conditions the ECM should detect a “rich” condition (high oxygen sensor voltage). If this “rich” exhaust is not detected at this time, a DTC P1171 will set. A plugged fuel filter, restricted fuel line, restricted in-tank filter or defective fuel pump can prevent adequate amouts of fuel from being supplied during power enrichment mode.

Conditions for Setting the DTC

- No related DTCs.
- Engine is operating in “closed loop power enrichment” mode for 3 seconds.
- Engine coolant temperature is between 30˚C and 120˚C.
- While in “power enrichment” mode the oxygen sensor voltage remains below 250 mV for 20 seconds.
- Engine running speed is between 1000 RPM and 6000 RPM.
- TP sensor voltage reading is above 2000 volts.
- Above conditions present for at least 10 second.

Action Taken When the DTC Sets

- The ECM will illuminate the malfunction indicator lamp (MIL) the first the fault is detected.

- The ECM will store conditions which were present when the DTC was set as Freeze Frame and in the Failure Records data.

Conditions for Clearing the MIL/DTC

- The ECM will turn the MIL "OFF" on the third consecutive trip cycle during which the diagnostic has been run and the fault condition is no longer present.
- A history DTC P1171 will clear after 40 consecutive warm-up cycles have occurred without a fault.
- DTC P1171 can be cleared by using the Tech 2 "Clear Info" function or by disconnecting the ECM battery feed.

Diagnostic Aids

- A restricted fuel filter or fuel line, restricted in-tank filter, or a defective fuel pomp may supply adequate amounts of fuel at idle, but may not be able to supply enough fuel during heavy acceleration.
- Water or alcohol in the fuel may cause low HO2S voltage during acceleration.
- Check for faulty or plugged fuel injector(s).
- Check for low fuel.

Test Description

Number(s) below refer to the step number(s) on the Diagnostic Chart.

4. When the engine is idling or at steady cruise, the HO2S voltage should vary from between approximately 100 mV to 900 mV. It is possible to measure a satisfactory fuel pressure at idle even though the pressure may drop at high flow requirements. It may be necessary to watch fuel pressure at high engine load.
5. Wrap a shop towel around the fuel pressure connector to absorb any small amount of fuel leakage that may occur when installing gauge. Ignition "ON," pump pressure should be 280-320kpa.

DTC P1171 – Fuel System Lean During Acceleration

Step	Action	Value(s)	Yes	No
1	Was the "On-Board Diagnostic (OBD) System Check" performed?	—	Go to *Step 2*	Go to *OBD System Check*
2	Are any component-related DTCs set?	—	Go to component DTC charts	Go to *Step 3*
3	1. Check the vehicle's fuel tank for an adequate amount of fuel. 2. Add fuel to the vehicle's fuel tank if the tank is almost empty. Was fuel added to the vehicle's fuel tank?	—	Go to *Step 4*	Go to *Step 5*
4	1. Place the transmission in park. 2. Using a Tech 2, observe HO2S voltage while running warm engine 75˚C-95˚C (167˚F-203˚F) at 1200 RPM. 3. HO2S 1 voltage should vary within the specified range. 4. Quickly open the throttle halfway for a few seconds. Did the voltage suddenly rise toward the high end of the specified range?	100-900 mV	Go to Fuel System Electrical Test	Go to *Step 5*
5	1. Disconnect the fuel pump relay and crank the engine to relieve the fuel pressure. 2. Install the fuel pressure gauge. 3. Start the engine and idle at normal operating temperature. 4. Disconnect the vacuum line going to the fuel pressure regulator. With the engine running, is the fuel pressure within the specified range?	280-325 kpa (41-46 psi)	Go to *OBD System Check*	Go to *Step 6*
6	Check for restricted fuel lines or restricted in-line filter. Was a problem found?	—	Verify repair	Go to *Step 7*

DTC P1171 – Fuel System Lean During Acceleration (Cont'd)

Step	Action	Value(s)	Yes	No
7	1. Ignition "OFF." 2. Remove the fuel pump relay and replace it with a fused jumper which will connect the relay's battery terminal to the terminal leading to the fuel pump fuse. 3. While the fuel pump is operating, use pliers to slowly close the return line (do not exceed the first specified value). Using the pliers to restrict the return line, can the fuel pressure be manipulated to exceed the second specified value?	414 kpa (60 psi) 325 kpa (46 psi)	Go to *Diagnostic Aids*	Go to *Step 8*
8	Check for: ● Faulty fuel pump ● Restricted fuel pump strainer (sock) ● Incorrect fuel pump ● Incorrect fuel being used ● Hot fuel Is the action complete?	—	Verify repair	—

Diagnostic Trouble Code (DTC) P1508 (Flash DTC=22) IAC System Low RPM

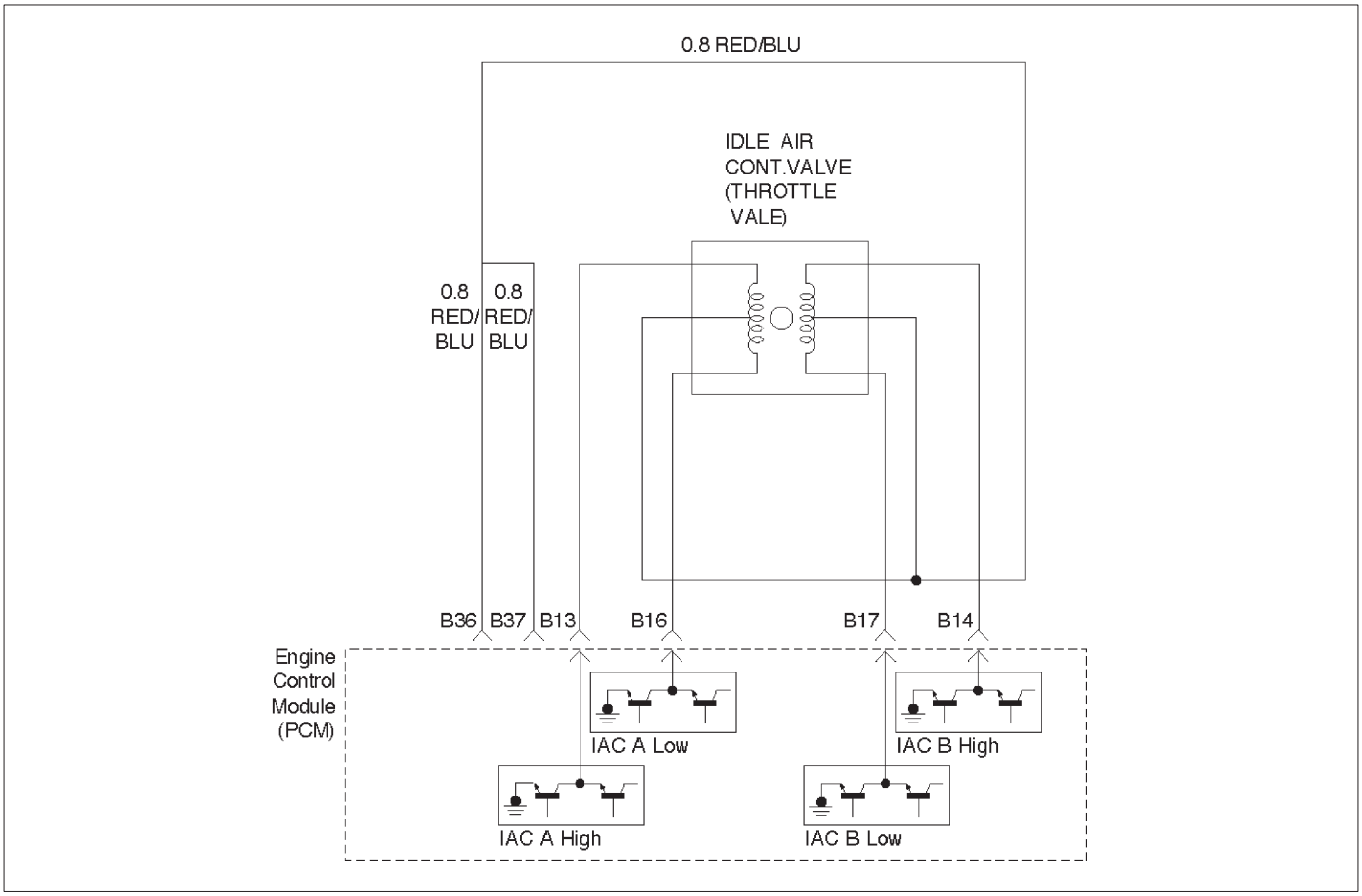

060RW076

Circuit Description

The engine control module (ECM) controls engine idle speed by adjusting the position of the idle air control (IAC) motor pintle. The IAC is a bi-directional stepper motor driven by two coils. The ECM applies current to the IAC coils in steps (counts) to extend the IAC pintle into a passage in the throttle body to decrease air flow. The ECM reverses the current to retract the pintle, increasing air flow. This method allows highly accurate control of idle speed and quick response to changes in engine load. If the ECM detects a condition where too low of an idle speed is present and the ECM is unable to adjust idle speed by increasing the IAC counts, DTC P1508 will set, indicating a problem with the idle control system.

Conditions for Setting the DTC

- No Tech 2 test is being run.
- None of these DTCs are set: TP sensor, CMP, CKP, MAF.
- Barometric pressure is above 75 kpa.
- Engine coolant temperature (ECT) is above 75˚C.
- Ignition voltage is above 11 volts.
- The throttle is closed.
- Engine speed is between 1000 RPM and 6000 RPM.
- Relation of IAC step and MAF in wrong.
- All of the above conditions are met for 1 seconds.

Action Taken When the DTC Sets

- The ECM will illuminate the malfunction indicator lamp (MIL) after the second consecutive trip in which the fault is detected.
- The ECM will store conditions which were present when the DTC was set as Freeze Frame and in the Failure Records data.

Conditions for Clearing the MIL/DTC

- The ECM will turn the MIL “OFF” on the third consecutive trip cycle during which the diagnostic has been run and the fault condition is no longer present.
- A history DTC P1508 will clear after 40 consecutive warm-up cycles have occurred without a fault.
- DTC P1508 can be cleared by using the Tech 2 “Clear Info” function or by disconnecting the ECM battery feed.

Diagnostic Aids

Check for the following conditions:

- Poor connection at ECM or IAC motor – Inspect harness connectors for backed-out terminals, improper mating, broken locks, improperly formed or damaged terminals, and poor terminal-to-wire connection.
- Damaged harness – Inspect the wiring for damage.
- Restricted air intake system – Check for a possible collapsed air intake duct, restricted air filter element, or foreign objects blocking the air intake system.

- Throttle body – Check for objects blocking the IAC passage or throttle bore, excessive deposits in the IAC passage and on the IAC pintle, and excessive deposits in the throttle bore and on the throttle plate.
- Large vacuum leak – Check for a condition that causes a large vacuum leak, such as an incorrectly installed or faulty PCV valve or a disconnected brake booster hose.

Reviewing the Failure Records vehicle mileage since the diagnostic test last failed may help determine how often the condition that caused the DTC to be set occurs. This may assist in diagnosing the condition.

DTC P1508 –IAC System Low RPM

Step	Action	Value(s)	Yes	No
1	Was the “On-Board Diagnostic (OBD) System Check” performed?	—	Go to *Step 2*	Go to *OBD System Check*
2	1. Start the engine. 2. Turn all accessories “OFF”(A/C, rear defroster, etc). 3. Using a Tech 2, command RPM up to 1500, down to 500, and the up to 1500 while monitoring the “Engine Speed” on the Tech 2. NOTE: This Tech 2 command may cause the engine to “cut out” when RPM goes above 1500. If this occurs, the “cutting out” will stop when the Tech 2 command for the test is discontinued, or if the Tech 2 command is changed to less than 1500 RPM. Does the “Engine Speed” remain within the specified value of the “Desired Idle” for each RPM command?	± 50 RPM	No trouble found. Go to *Diagnostic Aids*	Go to *Step 3*
3	1. Disconnect the IAC. 2. Install IAC Node Light J 37027 or equivalent. 3. With the engine running, command RPM up to 1500, down to 500, and then up to 1500 while observing the node light. NOTE: This Tech 2 command may cause the engine to “cut out” when RPM goes above 1500. If this occurs, the “cutting out” will stop when the Tech 2 command for the test is discontinued, or if the Tech 2 command is changed to less than 1500 RPM. Does each node light cycle red and green (never “OFF”)?	—	Go to *Step 5*	Go to *Step 4*
4	1. Check the following circuits for an open, short to voltage, short ground, or poor connections at the ECM: • IAC “A” Low. • IAC “A” High. • IAC “B” Low. • IAC “B” High. 2. If a problem its found, repair as necessary, Was a problem found?	—	Verify repair	Go to *Step 8*

DTC P1508 –IAC System Low RPM (Cont'd)

Step	Action	Value(s)	Yes	No
5	Visually/physically inspect for following conditions: ● Restricted air intake system. Check for a possible collapsed air intake duct, restricted air filter element, or foreign objects blocking the air intake system. ● Throttle body. Check for objects blocking the IAC passage or throttle bore, excessive deposits in the IAC passage and on the IAC pintle, and excessive deposits in the throttle bore and on the throttle plate. Do any of the above require a repair?	—	Refer to appropriate section for on-vehicle service	Go to *Step 6*
6	1. Check for a poor connection at the IAC harness connector. 2. If a problem is found, replace faulty terminals as necessary. Was a problem found?	—	Verify repair	Go to *Step 7*
7	Replace the IAC valve. Is the action complete?	—	Verify repair	—
8	Replace the ECM. Is the action complete?	—	Verify repair	—

Diagnostic Trouble Code (DTC) P1509 (Flash DTC=22) IAC System High RPM

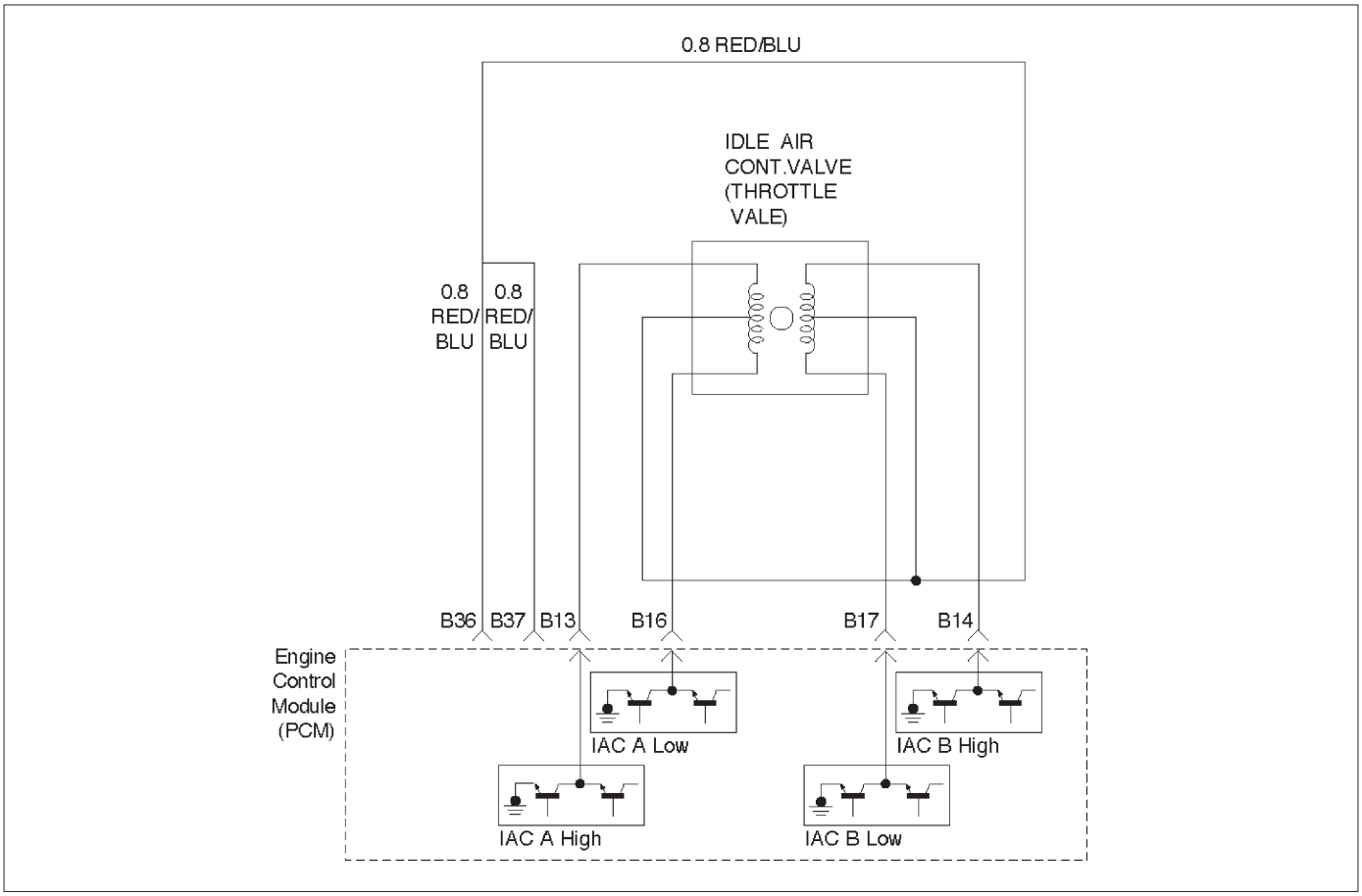

060RW076

Circuit Description

The engine control module (ECM) controls engine idle speed by adjusting the position of the idle air control (IAC) motor pintle. The IAC is a bi-directional stepper motor driven by two coils. The ECM applies current to the IAC coils in steps (counts) to extend the IAC pintle into a passage in the throttle body to decrease air flow. The ECM reverses the current to retract the pintle, increasing air flow. This method allows highly accurate control of idle speed and quick response to changes in engine load. If the ECM detect a condition where too high of an idle speed is present and the ECM is unable to adjust idle speed by increasing the IAC counts, DTC P1509 will set, indicating a problem with the idle control system.

Conditions for Setting the DTC

- No Tech 2 test is being run.
- None of these DTCs are set: TP sensor, CMP, CKP, MAF.
- Barometric pressure is above 75 kpa.
- Engine coolant temperature (ECT) is above 75˚C.
- Ignition voltage is above 11 volts.
- The throttle is closed.
- Engine speed is between 1000 RPM and 6000 RPM.
- Relation of IAC step and MAF in wrong.
- All of the above conditions are met for 1 seconds.

Action Taken When the DTC Sets

- The ECM will illuminate the malfunction indicator lamp (MIL) after the second consecutive trip in which the fault is detected.
- The ECM will store conditions which were present when the DTC was set as Freeze Frame and in the Failure Records data.

Conditions for Clearing the MIL/DTC

- The ECM will turn the MIL “OFF” on the third consecutive trip cycle during which the diagnostic has been run and the fault condition is no longer present.
- A history DTC P1509 will clear after 40 consecutive warm-up cycles have occurred without a fault.
- DTC P1509 can be cleared by using the Tech 2 “Clear Info” function or by disconnecting the ECM battery feed.

Diagnostic Aids

Check for the following conditions:

- Poor connection at ECM or IAC motor – Inspect harness connectors for backed-out terminals, improper mating, broken locks, improperly formed or damaged terminals, and poor terminal-to-wire connection.
- Damaged harness – Inspect the wiring for damage.
- Vacuum leak – Check for a condition that causes a vacuum leak, such as disconnected or damaged hoses, leaks at the EGR valve and the EGR pipe to the intake manifold, leaks at the throttle body, faulty or

incorrectly installed PCV valve, leaks at the intake manifold, etc.

- Throttle body – Check for sticking throttle plate. Also inspect the IAC passage for deposits or objects which keep the IAC pintle from fully extending.

Reviewing the Failure Records vehicle mileage since the diagnostic test last failed may help determine how often the condition that caused the DTC to be set occurs. This may assist in diagnosing the condition.

DTC P1509 –IAC System High RPM

Step	Action	Value(s)	Yes	No
1	Was the “On-Board Diagnostic (OBD) System Check” performed?	—	Go to *Step 2*	Go to *OBD System Check*
2	1. Start the engine. 2. Turn all accessories “OFF” (A/C, rear defroster, etc.). 3. Using a Tech 2, command RPM up to 1500, down to 500, and then up to 1500 while monitoring “Engine Speed” on the Tech 2. NOTE: This Tech 2 command may cause the engine to “cut out” when RPM goes above 1500. If this occurs, the “cutting out” will stop when the Tech 2 command for the test is discontinued, or if the Tech 2 command is changed to less than 1500 RPM. Does the “Engine Speed” remain within the specified value of “Desired Idle” for each RPM command?	± 50 RPM	No trouble found. Go to *Diagnostic Aids*	Go to *Step 3*
3	1. Disconnect the IAC. 2. Install IAC Node Light J 37027 or equivalent. 3. With the engine running, command RPM up to 1500, down to 500, and then up to 1500 while observing the node light. NOTE: This Tech 2 command may cause the engine to “cut out” when RPM goes above 1500. If this occurs, the “cutting out” will stop when the Tech 2 command for the test is discontinued, or if the Tech 2 command is changed to less than 1500 RPM. Does each node light cycle red and green (never “OFF”)?	—	Go to *Step 5*	Go to *Step 4*
4	1. Check the following circuits for an open, short to voltage, short ground, or poor connections at the ECM: • IAC “A” Low. • IAC “A” High. • IAC “B” Low. • IAC “B” High. 2. If a problem its found, repair as necessary. Was a problem found?	—	Verify repair	Go to *Step 8*
5	Visually/physically inspect for the following conditions: • Vacuum leaks. • Throttle plate or throttle shaft for binding. • Accelerator and cruise control cables for being misadjusted or for binding. • Faulty, missing, or incorrectly installed PCV valve. Do any of the above require a repair?	—	Refer to appropriate section for on-vehicle service	Go to *Step 6*

DTC P1509 –IAC System High RPM (Cont'd)

Step	Action	Value(s)	Yes	No
6	1. Check for a poor connection at the IAC harness connector. 2. If a problem is found, replace faulty terminals as necessary. Was a problem found?	—	Verify repair	Go to *Step 7*
7	Replace the IAC valve. Is the action complete?	—	Verify repair	—
8	Replace the ECM. Is the action complete?	—	Verify repair	—

Symptom Diagnosis

Surges and/or Chuggles Symptom

Step	Action	Value(s)	Yes	No
1	**DEFINITION:** Engine power variation under steady throttle or cruise. Feels like the vehicle speeds up and slows down with no change in the accelerator pedal. Was the “On-Board Diagnostic (OBD) System Check” performed?	—	Go to *Step 2*	Go to *OBD System Check*
2	1. Perform a bulletin search. 2. If a bulletin that addresses the symptom is found, correct the condition as instructed in the bulletin. Was a bulletin found that addresses the symptom?	—	Verify repair	Go to *Step 3*
3	Was a visual/physical check performed?	—	Go to *Step 4*	Go to *Visual/Physical Check*
4	Be sure that the driver understands transmission torque converter clutch and A/C compressor operation as explained in the owner’s manual. Inform the customer how the TCC and the A/C clutch operate. Is the customer experiencing a normal condition?	—	System OK	Go to *Step 5*
5	1. Check the the fuel control heated oxygen sensors (HO2S). The fuel control heated oxygen sensors (HO2S) should respond quickly to different throttle positions. If they don’t, check them for silicon or other contaminants from fuel or use of improper RTV sealant. The sensors may have a white powdery coating. Silicon contamination causes a high but false HO2S signal voltage (rich exhaust indication). The ECM will then reduce the amount of fuel delivered to the engine, causing a severe driveability problem. For more information, refer to *Engine Control Module (ECM) and Sensors*. 2. If a problem is found, repair as necessary. Was a problem found?	—	Verify repair	Go to *Step 6*
6	1. Check the fuel pressure. Refer to *Fuel System Pressure Test*. 2. If a problem is found, repair as necessary. Was a problem found?	—	Verify repair	Go to *Step 7*
7	Monitor the long term fuel trim on the Tech 2. Is the long term fuel trim significantly in the negative range (rich condition)?	—	Go to *Step 8*	Go to *Step 9*
8	1. Check items that can cause the engine to run rich. Refer to *Diagnostic Aids* in *DTC P0172 Diagnostic Support*. 2. If a problem is found, repair as necessary. Was a problem found?	—	Go to *Step 10*	Verify repair

Surges and/or Chuggles Symptom (Cont'd)

Step	Action	Value(s)	Yes	No
9	1. Check items that can cause the engine to run lean. Refer to *Diagnostic Aids* in *DTC P0171*. 2. If a problem is found, repair as necessary. Was a problem found?	—	Go to *Step 10*	Verify repair
10	1. Check for proper ignition voltage output with spark tester J 26792 (ST-125). Refer to *Electric Ignition System* for procedure. 2. If a problem is found, repair as necessary. Was a problem found?	—	Verify repair	Go to *Step 11*
11	1. Check for a loose ignition coil ground. Refer to *Electric Ignition System*. 2. If a problem is found, repair as necessary. Was a problem found?	—	Verify repair	Go to *Step 12*
12	1. Check the ignition coils for cracks or carbon tracking. 2. If a problem is found, repair as necessary. Was a problem found?	—	Verify repair	Go to *Step 14*
13	1. Remove the spark plugs and check for wet plugs, cracks, wear, improper gap, burned electrodes, or heavy deposits. Refer to *Electronic Ignition System*. NOTE: If spark plugs are gas or oil fouled, the cause of the fouling must be determined before replacing the spark plugs. 2. If a problem is found, repair as necessary. Was a problem found?	—	Verify repair	Go to *Step 14*
14	1. Check the injector connections. 2. If any of the injector connectors are connected to an incorrect cylinder, correct as necessary. Was a problem found?	—	Verify repair	Go to *Step 15*
15	1. Check ECM grounds for the cleanliness, tightness and proper locations. Refer to the ECM wiring diagrams in *Electrical Diagnosis*. 2. If a problem is found, repair as necessary. Was a problem found?	—	Verify repair	Go to *Step 16*
16	1. Check MAF sensor connections. 2. If a problem is found, replace the faulty terminals as necessary. Refer to *Electrical Diagnosis* for wiring repair procedures. Was a problem found?	—	Verify repair	Go to *Step 17*
17	1. Visually/physically check vacuum hoses for splits, kinks, and proper connections and routing as shown on the "Vehicle Emission Control Information" label. 2. If a problem is found, repair as necessary. Was a problem found?	—	Verify repair	Go to *Step 18*

Surges and/or Chuggles Symptom (Cont'd)

Step	Action	Value(s)	Yes	No
18	1. Check the exhaust system for possible restriction: ● Inspect the exhaust system for damaged or collapsed pipes. ● Inspect the muffler for heat distress or possible internal failure. ● Check for a possible plugged three-way catalytic converter by checking the exhaust system back pressure. Refer to *Restricted Exhaust System Check*. 2. If a problem is found, repair as necessary. Was a problem found?	—	Verify repair	Go to *Step 19*
19	1. Review all diagnostic procedures within this table. 2. If all procedures have been completed and no malfunctions have been found, review/inspect the following: ● Visual/physical inspection ● Tech 2 data ● Freeze Frame data/Failure Records buffer ● All electrical connections within a suspected circuit and/or system. 3. If a problem is found, repair as necessary. Was a problem found?	—	Verify repair	Contact Technical Assistance

Lack of Power, Sluggish or Spongy Symptom

Step	Action	Value(s)	Yes	No
1	**DEFINITION:** Engine delivers less than expected power. Little or no increase in speed when accelerator pedal is pushed down part-way. Was the "On-Board Diagnostic (OBD) System Check" performed?	—	Go to *Step 2*	Go to *OBD System Check*
2	1. Perform a bulletin search. 2. If a bulletin that addresses the symptom is found, correct the condition as instructed in the bulletin. Was a bulletin found that addresses the symptom?	—	Verify repair	Go to *Step 3*
3	Was a visual/physical check performed?	—	Go to *Step 4*	Go to *Visual/Physical Check*
4	1. Remove and check the air filter element for dirt or restrictions. Refer to *Air Intake System* in *On-Vehicle Service*. 2. Replace the air filter element if necessary. Was a repair required?	—	Verify repair	Go to *Step 5*
5	1. Check for low fuel pressure. Refer to *Fuel System Pressure Test*. 2. If a problem is found, repair as necessary. Was a problem found?	—	Verify repair	Go to *Step 6*
6	1. Check for water-or alcohol-contaminated fuel. 2. If a problem is found, repair as necessary. Was a problem found?	—	Verify repair	Go to *Step 7*
7	1. Using a Tech 2, monitor the knock sensor (KS) system for excessive spark retard activity. Refer to *Knock Sensor (KS) System*. 2. If a problem is found, repair as necessary. Was a problem found?	—	Verify repair	Go to *Step 8*
8	1. Check for proper ignition voltage output with spark tester 5-8840-0383-0. Refer to *Electronic Ignition System* for procedure. 2. If a problem is found, repair as necessary. Was a problem found?	—	Verify repair	Go to *Step 9*
9	1. Remove the spark plugs and check for wet plugs, cracks, wear, improper gap, burned electrodes, or heavy deposits. Refer to *Electronic Ignition System*. NOTE: If spark plugs are gas or oil fouled, the cause of the fouling must be determined before replacing the spark plugs. 2. If a problem is found, repair as necessary. Was a problem found?	—	Verify repair	Go to *Step 10*
10	1. Check the ignition coils for cracks or carbon tracking. 2. If a problem is found, repair as necessary. Was a problem found?	—	Verify repair	Go to *Step 11*

Lack of Power, Sluggish or Spongy Symptom (Cont'd)

Step	Action	Value(s)	Yes	No
11	1. Check the ECM grounds for the cleanliness, tightness and proper locations. Refer to the ECM wiring diagrams in *Electrical Diagnosis*. 2. If a problem is found, repair as necessary. Was a problem found?	—	Verify repair	Go to *Step 12*
12	1. Check the exhaust system for possible restriction: ● Inspect the exhaust system for damaged or collapsed pipes. ● Inspect the muffler for heat distress or possible internal failure. ● Check for a possible plugged three-way catalytic converter by checking the exhaust system back pressure. Refer to *Restricted Exhaust System Check*. 2. If a problem is found, repair as necessary. Was a problem found?	—	Verify repair	Go to *Step 13*
13	1. Check the torque converter clutch (TCC) for proper operation. Refer to *Transmission Diagnosis*. 2. If a problem is found, repair as necessary. Was a problem found?	—	Verify repair	Go to *Step 14*
14	1. Check for an engine mechanical problem. Check for low compression, incorrect or worn camshaft, loose timing belt, etc. Refer to *Engine Mechanical*. 2. If a problem is found, repair as necessary. Was a problem found?	—	Verify repair	Go to *Step 15*
15	1. Review all diagnostic procedures within this table. 2. If all procedures have been completed and no malfunctions have been found, review/inspect the following: ● Visual/physical inspection ● Tech 2 data ● Freeze Frame data/Failure Records buffer ● All electrical connections within a suspected circuit and/or system. 3. If a problem is found, repair as necessary. Was a problem found?	—	Verify repair	Contact Technical Assistance

Detonation/Spark Knock Symptom

Step	Action	Value(s)	Yes	No
1	**DEFINITION:** A mild to severe ping, usually worse under acceleration. The engine makes sharp metallic knocks that change with throttle opening. Was the "On-Board Diagnostic (OBD) System Check" performed?	—	Go to *Step 2*	Go to *OBD System Check*
2	1. Perform a bulletin search. 2. If a bulletin that addresses the symptom is found, correct the condition as instructed in the bulletin. Was a bulletin found that addresses the symptom?	—	Verify repair	Go to *Step 3*
3	Was a visual/physical check performed?	—	Go to *Step 4*	Go to *Visual/Physical Check*
4	If Tech 2 readings are normal (refer to *Typical Scan Values*) and there are no engine mechanical faults, fill the fuel tank with a known quality gasoline that has a minimum octane rating of 87 and re-evaluate the vehicle performance. Is detonation present?	—	Go to *Step 5*	Verify repair
5	1. Check the transmission range switch circuit. Use a Tech 2 and be sure the Tech 2 indicates that the vehicle is in drive with the gear selector in drive or overdrive. 2. If a problem is found, diagnose and repair the transmission range switch as necessary. Was a problem found?	—	Verify repair	Go to *Step 6*
6	1. Check TCC operation. 2. If a problem is found, repair as necessary. Was a problem found?	—	Verify repair	Go to *Step 7*
7	1. Check for obvious overheating problems: • Low engine coolant. • Restricted air flow to radiator, or restricted water flow through radiator. • Correct coolant solution should be a 50/50 mix of approved antifreeze/coolant and water. Refer to *Engine Cooling*. 2. If a problem is found, repair as necessary. Was a problem found?	—	Verify repair	Go to *Step 8*
8	1. Check fuel pressure. Refer to *Fuel System Pressure Test*. 2. If a problem is found, repair as necessary. Was a problem found?	—	Verify repair	Go to *Step 9*
9	1. Check items that can cause an engine to run lean (long term fuel trim significantly in the positive range). For a lean condition, refer to *Diagnostic Aids* in *DTC P0171 Diagnostic Support*. 2. If a problem is found, repair as necessary. Was a problem found?	—	Verify repair	Go to *Step 10*

Detonation/Spark Knock Symptom (Cont'd)

Step	Action	Value(s)	Yes	No
10	1. Spark plugs for proper heat range. Refer to *General Information*. 2. If incorrect spark plugs are installed, replace spark plugs as necessary. Did any spark plugs require replacement?	—	Verify repair	Go to *Step 11*
11	1. Remove excessive carbon buildup with a top engine cleaner. Refer to instructions on the top engine cleaner can. 2. Re-evaluate vehicle performance. Is detonation still present?	—	Go to *Step 12*	Verify repair
12	1. Check for an engine mechanical problem. Perform a cylinder compression check. Refer to *Engine Mechanical*. 2. If a problem is found, repair as necessary. Was a problem found?	—	Verify repair	Go to *Step 13*
13	1. Review all diagnostic procedures within this table. 2. If all procedures have been completed and no malfunctions have been found, review/inspect the following: ● Visual/physical inspection ● Tech 2 data ● Freeze Frame data/Failure Records buffer ● All electrical connections within a suspected circuit and/or system. 3. If a problem is found, repair as necessary. Was a problem found?	—	Verify repair	Contact Technical Assistance

Rough, Unstable, or Incorrect Idle, Stalling Symptom

Step	Action	Value(s)	Yes	No
1	**DEFINITION:** Engine runs unevenly at idle. If severe, the engine or vehicle may shake. Engine idle speed may vary in RPM. Either condition may be severe enough to stall the engine. Was the “On-Board Diagnostic (OBD) System Check” performed?	—	Go to *Step 2*	Go to *OBD System Check*
2	1. Perform a bulletin search. 2. If a bulletin that addresses the symptom is found, correct the condition as instructed in the bulletin. Was a bulletin found that addresses the symptom?	—	Go to *Step 13*	Go to *Step 3*
3	Was a visual/physical check performed?	—	Go to *Step 4*	Go to *Visual/Physical Check*
4	1. Check the ECM grounds for cleanliness, tightness and proper routing. Refer to the ECM wiring diagrams in *Electrical Diagnosis*. 2. If a problem is found, repair as necessary. Was a problem found?	—	Verify repair	Go to *Step 5*
5	Observe the long term fuel trim on the Tech 2. Is the long term fuel trim significantly in the negative range (rich condition)?	—	Go to *Step 6*	Go to *Step 7*
6	1. Check items that can cause the engine to run rich. Refer to *Diagnostic Aids* in *DTC P0172 Diagnostic Support*. 2. If a problem is found, repair as necessary. Was a problem found?	—	Verify repair	Go to *Step 9*
7	Is the long term fuel trim significantly in the positive range (lean condition)?	—	Go to *Step 8*	Go to *Step 9*
8	1. Check items that can cause the engine to run lean. Refer to *Diagnostic Aids* in *DTC P0171 Diagnostic Support*. 2. If a problem is found, repair as necessary. Was a problem found?	—	Verify repair	Go to *Step 9*
9	1. Check for incorrect idle speed. Ensure that the following conditions are present: • The engine is fully warm. • The accessories are “OFF.” 2. Using a Tech 2, monitor the IAC position. Is the IAC position within the specified values?	Between 10 and 50 counts	Go to *Step 11*	Go to *Step 10*

Rough, Unstable, or Incorrect Idle, Stalling Symptom (Cont'd)

Step	Action	Value(s)	Yes	No
10	1. Visually/physically inspect for the following conditions: ● Restricted air intake system. Check for a possible collapsed air intake duct, restricted air filter element, or foreign objects blocking the air intake system. ● Throttle body. Check for objects blocking the IAC passage or throttle bore, excessive deposits in the IAC passage and on the IAC pintle, and excessive deposits in the throttle bore and on the throttle plate. ● Large vacuum leak. Check for a condition that causes a large vacuum leak, such as an incorrectly installed or faulty crankcase ventilation valve or a disconnected brake booster hose. 2. If a problem is found, repair as necessary. Was a problem found?	—	Verify repair	Go to *Step 8*
11	Check the injector connections. If any of the injectors are connected to an incorrect cylinder, correct as necessary. Was a problem found?	—	Verify repair	Go to *Step 12*
12	1. Perform the "Injector Coil/Balance Test" in *Fuel Metering System*. 2. If a problem is found, repair as necessary. Was a problem found?	—	Verify repair	Go to *Step 13*
13	1. Check for fuel in the pressure regulator vacuum hose. 2. If fuel is present, replace the fuel pressure regulator assembly. Refer to *Fuel Metering System*. 3. If a problem is found, repair as necessary. Was a problem found?	—	Verify repair	Go to *Step 14*
14	1. Check for proper ignition voltage output with spark tester J 26792 (ST-125). Refer to *Electronic Ignition System* for the procedure. 2. If a problem is found, repair as necessary. Was a problem found?	—	Verify repair	Go to *Step 15*
15	1. Remove spark plugs. Check for wet plugs, cracks, wear, improper gap, burned electrodes, or heavy deposits. Refer to *Electronic Ignition System*. NOTE: If spark plugs are gas or oil fouled, the cause of the fouling must be determined before replacing the spark plugs. 2. If a problem is found, repair as necessary. Was a problem found?	—	Verify repair	Go to *Step 16*
16	1. Check for a loose ignition coil ground. Refer to *Electrical Ignition System*. 2. If a problem is found, repair as necessary. Was a problem found?	—	Verify repair	Go to *Step 17*

Rough, Unstable, or Incorrect Idle, Stalling Symptom (Cont'd)

Step	Action	Value(s)	Yes	No
17	1. Check ignition coils for cracks or carbon tracking. 2. If a problem is found, repair as necessary. Was a problem found?	—	Verify repair	Go to *Step 18*
18	Using a Tech 2, monitor the throttle position (TP) angle with the engine idling. Is the TP angle at the specified value and steady?	0%	Go to *Step 19*	Refer to *DTC P0123* for further diagnosis
19	1. Check the positive crankcase ventilation (PCV) valve for proper operation. Refer to *Crankcase Ventilation System*. 2. If a problem is found, repair as necessary. Was a problem found?	—	Verify repair	Go to *Step 20*
20	1. Check the transmission range switch circuit. Use a Tech 2 and be sure the Tech 2 indicates that the vehicle is in drive with the gear selector in drive or overdrive. 2. If a problem is found, diagnose and repair the transmission range switch as necessary (refer to *4L30-E Automatic Transmission Diagnosis*). Was a problem found?	—	Verify repair	Go to *Step 21*
21	1. Check for the following engine mechanical items. Refer to *Engine Mechanical* for diagnosis procedures: ● Low compression ● Sticking or leaking valves ● Worn camshaft lobe(s) ● Camshaft drive belt slipped or stripped ● Incorrect valve timing ● Worn rocker arms ● Broken valve springs 2. If a problem is found, repair as necessary. Was a problem found?	—	Verify repair	Go to *Step 22*
22	1. Check for faulty motor mounts. Refer to *Engine Mechanical* for inspection of mounts. 2. If a problem is found, repair as necessary. Was a problem found?	—	Verify repair	Go to *Step 23*
23	1. Review all diagnostic procedures within this table. 2. If all procedures have been completed and no malfunctions have been found, review/inspect the following: ● Visual/physical inspection ● Tech 2 data ● Freeze Frame data/Failure Records buffer ● All electrical connections within a suspected circuit and/or system. 3. If a problem is found, repair as necessary. Was a problem found?	—	Verify repair	Contact Technical Assistance

Poor Fuel Economy Symptom

Step	Action	Value(s)	Yes	No
1	**DEFINITION:** Fuel economy, as measured by an actual road test, is noticeably lower than expected. Also, economy is noticeably lower than it was on this vehicle at one time, as previously shown by an actual road test. (Larger than standard tires will cause odometer readings to be incorrect, and that may cause fuel economy to appear poor when it is actually normal.) Was the "On-Board Diagnostic (OBD) System Check" performed?	—	Go to *Step 2*	Go to *OBD System Check*
2	1. Perform a bulletin search. 2. If a bulletin that addresses the symptom is found, correct the condition as instructed in the bulletin. Was a bulletin found that addresses the symptom?	—	Verify repair	Go to *Step 3*
3	Was a visual/physical check performed?	—	Go to *Step 4*	Go to *Visual/Physical Check*
4	Check owner's driving habits. ● Is the A/C "ON" full time (defroster mode "ON")? ● Are tires at the correct pressure? ● Are excessively heavy loads being carried? ● Is acceleration too much, too often? Was a problem found?	—	Go to *Step 5*	Go to *Step 6*
5	Review the items in Step 4 with the customer and advise as necessary. Is the action complete?	—	System OK	—
6	1. Visually/physically check: Vacuum hoses for splits, kinks, and improper connections and routing as shown on the "Vehicle Emission Control Information" label. 2. If a problem is found, repair as necessary. Was a repair required?	—	Verify repair	Go to *Step 7*
7	1. Remove and check the air filter element for dirt or for restrictions. Refer to *Air Intake System*. 2. Replace the air filter element if necessary. Was a repair required?	—	Verify repair	Go to *Step 8*
8	1. Remove spark plugs and check for wet plugs, cracks, wear, improper gap, burned electrodes, or heavy deposits. Refer to *Spark Plug Replacement*. NOTE: If spark plugs are gas or oil fouled, the cause of the fouling must be determined before replacing the spark plugs. 2. If a problem is found, repair as necessary. Was a problem found?	—	Verify repair	Go to *Step 9*
9	1. Check for low engine coolant level. Refer to *Engine Cooling*. 2. If a problem is found, repair as necessary. Was a problem found?	—	Verify repair	Go to *Step 10*

Poor Fuel Economy Symptom (Cont'd)

Step	Action	Value(s)	Yes	No
10	1. Check for an incorrect or faulty engine thermostat. Refer to *Engine Cooling*. 2. If a problem is found, repair as necessary. Was a problem found?	—	Verify repair	Go to *Step 11*
11	1. Check for low engine compression. Refer to *Engine Mechanical*. 2. If a problem is found, repair as necessary. Was a problem found?	—	Verify repair	Go to *Step 12*
12	1. Check the TCC operation. Refer to *Transmission Diagnosis*. 2. If a problem is found, repair as necessary. Was a problem found?	—	Verify repair	Go to *Step 13*
13	1. Check the exhaust system for possible restriction: ● Inspect the exhaust system for damaged or collapsed pipes. ● Inspect the muffler for heat distress or possible internal failure. ● Check for a possible plugged three-way catalytic converter by checking the exhaust system back pressure. Refer to *Restricted Exhaust System Check*. 2. If a problem is found, repair as necessary. Was a problem found?	—	Verify repair	Go to *Step 14*
14	Check for proper calibration of the speedometer. Does the speed indicated on the speedometer closely match the vehicle speed displayed on the Tech 2?	—	Go to *Step 16*	Go to *Step 15*
15	Diagnose and repair an inaccurate speedometer condition as necessary. Refer to *Vehicle Speed Sensor* in *Electrical Diagnosis*. Was a problem found?	—	Verify repair	—
16	1. Check the air intake system and the crankcase for air leaks. Refer to *Air Intake System* and *Crankcase Ventilation System*. 2. If a problem is found, repair as necessary. Was a problem found?	—	Verify repair	Go to *Step 17*
17	1. Review all diagnostic procedures within this table. 2. When all procedures have been completed and no malfunctions have been found, review/inspect the following: ● Visual/physical inspection ● Tech 2 data ● Freeze Frame data/Failure Records buffer ● All connections within a suspected circuit and/or system. 3. If a problem is found, repair as necessary. Was a problem found?	—	Verify repair	Go to *Step 18*
18	Perform the procedure in *Fuel System Pressure Test*. Was the fuel pressure normal?	—	Contact Technical Assistance	Verify repair

Excessive Exhaust Emissions or Odors Symptom

Step	Action	Value(s)	Yes	No
1	**DEFINITION:** Vehicle fails an emission test. Vehicle has excessive "rotten egg" smell. (Excessive odors do not necessarily indicate excessive emissions.) Was the "On-Board Diagnostic (OBD) System Check" performed?	—	Go to *Step 2*	Go to *OBD System Check*
2	1. Perform a bulletin search. 2. If a bulletin that addresses the symptom is found, correct the condition as instructed in the bulletin. Was a bulletin found that addresses the symptom?	—	Go to *Step 13*	Go to *Step 3*
3	Was a thorough visual/physical check performed?	—	Go to *Step 4*	Go to *Visual/Physical Check*
4	1. Check for vacuum leaks. Check vacuum lines, intake manifold, throttle body, etc. 2. If a problem is found, repair as necessary. Were any vacuum leaks located?	—	Go to *Step 13*	Go to *Step 5*
5	1. Check the fuel cap for proper installation. 2. Secure the fuel cap if necessary. Was the fuel cap installed properly?	—	Go to *Step 6*	Go to *Step 13*
6	1. Check the fuel pressure. Perform the procedure in *Fuel System Pressure Test*. 2. If a problem is found, repair as necessary. Was a problem found?	—	Go to *Step 13*	Go to *Step 7*
7	1. Check for a faulty, plugged, or incorrectly installed crankcase ventilation valve; also check the crankcase ventilation system for plugging. 2. If a problem is found, repair as necessary. Was a problem found?	—	Go to *Step 13*	Go to *Step 8*
8	1. Check the injector connections. 2. If any of the injectors are connected to an incorrect cylinder, correct as necessary. Was a problem found?	—	Go to *Step 13*	Go to *Step 9*
9	1. Perform the "Injector Coil/Balance Test" in *Fuel Metering System*. 2. If a problem is found, repair as necessary. Was a problem found?	—	Go to *Step 13*	Go to *Step 10*
10	1. Refer to *Engine Cooling* for cooling system diagnosis. 2. If a problem is found, repair as necessary. Was a problem found?	—	Go to *Step 13*	Go to *Step 11*
11	1. Check EVAP canister for fuel loading. Refer to *Evaporative Emission Control System*. 2. If a problem is found, repair as necessary. Was a problem found?	—	Go to *Step 13*	Go to *Step 12*

Excessive Exhaust Emissions or Odors Symptom (Cont'd)

Step	Action	Value(s)	Yes	No
12	1. Remove excessive carbon buildup with a top engine cleaner. Refer to the instructions on the top engine cleaner can. 2. Perform the exhaust emission test. Does the vehicle pass the test?	—	System OK	Go to *Step 14*
13	Perform the exhaust emission test. Does the vehicle pass the test?	—	System OK	Go to *Step 14*
14	Does the exhaust emission test indicate excessive CO and HC levels or is long term fuel trim significantly in the negative range (rich condition)?	—	Go to *Step 15*	Go to *Step 16*
15	1. Check items that can cause the engine to run rich. Refer to *Diagnostic Aids* in *DTC P0172 Diagnostic Support*. Make any necessary repairs. 2. Perform the exhaust emission test. Does the vehicle pass the test?	—	System OK	Go to *Step 17*
16	1. Check items that can cause the engine to run lean. Refer to *Diagnostic Aids* in *DTC P0171 Diagnostic Support*. Make any necessary repairs. 2. Perform the exhaust emission test. Does the vehicle pass the test?	—	System OK	Go to *Step 17*
17	1. If a problem is found, repair as necessary. Was a problem found?	—	Go to *Step 13*	Go to *Step 18*
18	1. Check for an engine mechanical problem. Perform a cylinder compression check (refer to *Engine Mechanical*). 2. If a problem is found, repair as necessary. Was a problem found?	—	Go to *Step 13*	Go to *Step 19*
19	1. Review all diagnostic procedures within this table. 2. If all procedures have been completed and no malfunctions have been found, review/inspect the following: • Visual/physical inspection • Tech 2 data • Freeze Frame data/Failure Records butter • All electrical connections within a suspected circuit and/or system. 3. If a problem is found, repair as necessary. Was a problem found?	—	Verify repair	Contact Technical Assistance

Dieseling, Run-On Symptom

Step	Action	Value(s)	Yes	No
1	**DEFINITION:** Engine continues to run after key is turned “OFF,” but runs very rough. If engine runs smooth, check ignition switch and adjustment. Was the “On-Board Diagnostic (OBD) System Check” performed?	—	Go to *Step 2*	Go to *OBD System Check*
2	1. Perform a bulletin search. 2. If a bulletin that addresses the symptom is found, correct the condition as instructed in the bulletin. Was a bulletin found that addresses the symptom?	—	Verify repair	Go to *Step 3*
3	Was a visual/physical check performed?	—	Go to *Step 4*	Go to *Visual/Physical Check*
4	1. Check for a short between B+ and any of the ignition feed circuits. 2. If a problem is found, repair as necessary. Was a problem found?	—	Verify repair	Go to *Step 5*
5	1. Review all diagnostic procedures within this table. 2. If all procedures have been completed and no malfunctions have been found, review/inspect the following: • Visual/physical inspection • Tech 2 data • Freeze Frame data/Failure Records butter • All electrical connections within a suspected circuit and/or system 3. If a problem is found, repair as necessary. Was a problem found?	—	Verify repair	Contact Technical Assistance

Backfire Symptom

Step	Action	Value(s)	Yes	No
1	**DEFINITION:** Fuel ignites in the intake manifold, or in the exhaust system, making a loud popping noise. Was the “On-Board Diagnostic (OBD) System Check” performed?	—	Go to *Step 2*	Go to *OBD System Check*
2	1. Perform a bulletin search. 2. If a bulletin that addresses the symptom is found, correct the condition as instructed in the bulletin. Was a bulletin found that addresses the symptom?	—	Verify repair	Go to *Step 3*
3	Was a visual/physical check performed?	—	Go to *Step 4*	Go to *Visual/Physical Check*
4	1. Check for proper ignition voltage coil output with spark tester 5-8840-0383-0. Refer to *Electronic Ignition System* for procedure. 2. If a problem is found, repair as necessary. Was a problem found?	—	Verify repair	Go to *Step 5*
5	1. Remove spark plugs and check for wet plugs, cracks, wear, improper gap, burned electrodes, or heavy deposits. Refer to *Electronic Ignition System*. NOTE: If spark plugs are gas or oil fouled, the cause of the fouling must be determined before replacing the spark plugs. Refer to *DTC P0172* to determine the cause of a rich condition or *Engine Mechanical* for an oil fouling condition. 2. If a problem is found, repair as necessary. Was a problem found?	—	Verify repair	Go to *Step 6*
6	1. Visually/physically inspect the ignition coils for cracks. 2. If a problem is found, repair as necessary. Was a problem found?	—	Verify repair	Go to *Step 7*
7	1. Check for an intermittent ignition system malfunction: ● Intermittent CKP signal. ● Intermittent ignition feed circuit or sensor ground circuit to the crankshaft position sensor. 2. If a problem is found, repair as necessary. Was a problem found?	—	Verify repair	Go to *Step 8*
8	1. Check the fuel pressure. Refer to *Fuel System Pressure Test*. 2. If a problem is found, repair as necessary. Was a problem found?	—	Verify repair	Go to *Step 9*

Backfire Symptom (Cont'd)

Step	Action	Value(s)	Yes	No
9	1. Check for the following engine mechanical conditions. Refer to *Engine Mechanical* for diagnosis procedures: ● Low compression ● Sticking or leaking valves ● Worn camshaft lobe(s) ● Camshaft drive belt slipped or stripped ● Incorrect valve timing 2. If a problem is found, repair as necessary. Was a problem found?	—	Verify repair	Go to *Step 10*
10	1. Check the intake and exhaust manifold(s) for casting flash. Refer to *Engine Mechanical*. 2. If a problem is found, repair as necessary. Was a problem found?	—	Verify repair	Go to *Step 11*
11	1. Review all diagnostic procedures within this table. 2. If all procedures have been completed and no malfunctions have been found, review/inspect the following: ● Visual/physical inspection ● Tech 2 data ● Freeze Frame data/Failure Records butter ● All electrical connections within a suspected circuit and/or system. 3. If a problem is found, repair as necessary. Was a problem found?	—	Verify repair	Contact Technical Assistance

Cuts Out, Misses Symptom

Step	Action	Value(s)	Yes	No
1	**DEFINITION:** Steady pulsation or jerking that follows engine speed; usually more pronounced as engine load increases. Was the “On-Board Diagnostic (OBD) System Check” performed?	—	Go to *Step 2*	Go to *OBD System Check*
2	1. Perform a bulletin search. 2. If a bulletin that addresses the symptom is found, correct the condition as instructed in the bulletin. Was a bulletin found that addresses the symptom?	—	Go to *Step 13*	Go to *Step 3*
3	Was a visual/physical check performed?	—	Go to *Step 4*	Go to *Visual/Physical Check*
4	1. Check the ECM grounds for clearness, tightness and proper routing. Refer to the ECM wiring diagrams in *Electrical Diagnosis*. 2. If a problem is found, repair as necessary. Was a problem found?	—	Verify repair	Go to *Step 5*
5	Observe the long term fuel trim on the Tech 2. Is the long term fuel trim significantly in the negative range (rich condition)?	—	Go to *Step 6*	Go to *Step 7*
6	1. Check items that can cause the engine to run rich. Refer to *Diagnostic Aids* in *DTC P0172 Diagnostic Support*. 2. If a problem is found, repair as necessary. Was a problem found?	—	Verify repair	Go to *Step 9*
7	Is the long term fuel trim significantly in the positive range (lean condition)?	—	Go to *Step 8*	Go to *Step 9*
8	1. Check items that can cause the engine to run lean. Refer to *Diagnostic Aids* in *DTC P0171 Diagnostic Support*. 2. If a problem is found, repair as necessary. Was a problem found?	—	Verify repair	Go to *Step 9*
9	1. Check for incorrect idle speed. Ensure that the following conditions are present: ● The engine is fully warm. ● The accessories are “off.” 2. Using a Tech 2, monitor the IAC position. Is the IAC position within the specified values?	Between 5 and 50 counts	Go to *Step 11*	Go to *Step 10*

Cuts Out, Misses Symptom (Cont'd)

Step	Action	Value(s)	Yes	No
10	1. Visually/physically inspect for the following conditions: ● Restricted air intake system. Check for a possible collapsed air intake duct, restricted air filter element, or foreign objects blocking the air intake system. ● Throttle body. Check for objects blocking the IAC passage or throttle bore, excessive deposits in the IAC passage and on the IAC pintle, and excessive deposits in the throttle bore and on the throttle plate. ● Large vacuum leak. Check for a condition that causes a large vacuum leak, such as an incorrectly installed or faulty PCV valve or brake booster hose disconnected . 2. If a problem is found, repair as necessary. Was a problem found?	—	Verify repair	Go to *Step 8*
11	Check the injector connections. If any of the injectors are connected to an incorrect cylinder, correct as necessary. Was a problem found?	—	Verify repair	Go to *Step 12*
12	1. Perform the "Injector Coil/Balance Test" in *Fuel Metering System*. 2. If a problem is found, repair as necessary. Was a problem found?	—	Verify repair	Go to *Step 13*
13	1. Check for fuel in the pressure regulator vacuum hose. 2. If fuel is present, replace the fuel pressure regulator assembly. Refer to *Fuel Metering System*. 3. If a problem is found, repair as necessary. Was a problem found?	—	Verify repair	Go to *Step 14*
14	1. Check for proper ignition voltage output with spark tester 5-8840-0383-0. Refer to *Electronic Ignition System* for the procedure. 2. If a problem is found, repair as necessary. Was a problem found?	—	Verify repair	Go to *Step 15*
15	1. Remove spark plugs. Check for wet plugs, cracks, wear, improper gap, burned electrodes, or heavy deposits. Refer to *Electronic Ignition System*. NOTE: If spark plugs are gas or oil fouled, the cause of the fouling must be determined before replacing the spark plugs. 2. If a problem is found, repair as necessary. Was a problem found?	—	Verify repair	Go to *Step 16*
16	1. Check for a loose ignition coil ground. Refer to *Electronic Ignition System*. 2. If a problem is found, repair as necessary. Was a problem found?	—	Verify repair	Go to *Step 17*

Cuts Out, Misses Symptom (Cont'd)

Step	Action	Value(s)	Yes	No
17	1. Check ignition coils for cracks or carbon tracking. 2. If a problem is found, repair as necessary. Was a problem found?	—	Verify repair	Go to *Step 18*
18	Using a Tech 2, monitor the TP angle with the engine idling. Is the TP angle at the specified value and steady?	0%	Go to *Step 19*	Refer to *DTC P0123* for further diagnosis
19	1. Check the PCV valve for proper operation. Refer to *Crankcase Ventilation System*. 2. If a problem is found, repair as necessary. Was a problem found?	—	Verify repair	Go to *Step 20*
20	1. Check the transmission range switch circuit. Use a Tech 2 and be sure the Tech 2 indicates that the vehicle is in drive with the gear selector in drive or overdrive. 2. If a problem is found, diagnose and repair the transmission range switch as necessary. Was a problem found?	—	Verify repair	Go to *Step 21*
21	1. Check the following engine mechanical items. Refer to *Engine Mechanical* for diagnosis procedures: • Low compression • Sticking or leaking valves • Worn camshaft lobe(s) • Camshaft drive belt slipped or stripped • Incorrect valve timing • Broken valve springs 2. If a problem is found, repair as necessary. Was a problem found?	—	Verify repair	Go to *Step 22*
22	1. Check for faulty motor mounts. Refer to *Engine Mechanical* for inspection of mounts. 2. If a problem is found, repair as necessary. Was a problem found?	—	Verify repair	Go to *Step 23*
23	1. Review all diagnostic procedures within this table. 2. If all procedures have been completed and no malfunctions have been found, review/inspect the following: • Visual/physical inspection • Tech 2 data • Freeze Frame data/Failure Records butter • All electrical connections within a suspected circuit and/or system 3. If a problem is found, repair as necessary. Was a problem found?	—	Verify repair	Contact Technical Assistance

Hesitation, Sag, Stumble Symptom

Step	Action	Value(s)	Yes	No
1	**DEFINITION:** Momentary lack of response as the accelerator is pushed down. Can occur at any vehicle speed. Usually most pronounced when first trying to make the vehicle move, as from a stop sign. May cause the engine to stall if severe enough. Was the “On-Board Diagnostic (OBD) System Check” performed?	—	Go to *Step 2*	Go to *OBD System Check*
2	1. Perform a bulletin search. 2. If a bulletin that addresses the symptom is found, correct the condition as instructed in the bulletin. Was a bulletin found that addresses the symptom?	—	Verify repair	Go to *Step 3*
3	Was a visual/physical check performed?	—	Go to *Step 4*	Go to *Visual/Physical Check*
4	1. Check the fuel control heated oxygen sensors (HO2S). The fuel control heated oxygen sensors (HO2S) should respond quickly to different throttle positions. If they don’t, check them for silicon or other contaminants from fuel or use of improper RTV sealant. The sensors may have a white powdery coating. Silicon contamination causes a high but false HO2S signal voltage (rich exhaust indication). The ECM will then reduce the amount of fuel delivered to the engine, causing a severe driveability problem. For more information, refer to *Engine Control Module (ECM) and Sensors*. 2. If a problem is found, repair as necessary. Was a problem found?	—	Verify repair	Go to *Step 5*
5	1. Check the fuel pressure. Refer to *Fuel System Pressure Test*. 2. If a problem is found, repair as necessary. Was a problem found?	—	Verify repair	Go to *Step 6*
6	Observe the TP angle display on the Tech 2 while slowly increasing throttle pedal. Does the TP angle display steadily increase from 0% at closed throttle to 100% at WOT?	—	Go to *Step 7*	Go to *Step 18*
7	Monitor the long term fuel trim on the Tech 2. Is the long term fuel trim significantly in the negative range (rich condition)?	—	Go to *Step 8*	Go to *Step 9*
8	1. Check items that can cause the engine to run rich. Refer to *Diagnostic Aids* in *DTC P0172 Diagnostic Support*. 2. If a problem is found, repair as necessary. Was a problem found?	—	Verify repair	Go to *Step 10*
9	1. Check items that can cause the engine to run lean. Refer to *Diagnostic Aids* in *DTC P0171 Diagnostic Support*. 2. If a problem is found, repair as necessary. Was a problem found?	—	Verify repair	Go to *Step 10*

Hesitation, Sag, Stumble Symptom (Cont'd)

Step	Action	Value(s)	Yes	No
10	1. Check for proper ignition voltage output with spark tester J 26792 (ST-125). Refer to *Electronic Ignition System* for the procedure. 2. If a problem is found, repair as necessary. Was a problem found?	—	Verify repair	Go to *Step 11*
11	1. Check for a loose ignition coil ground. Refer to *Electronic Ignition System*. 2. If a problem is found, repair as necessary. Was a problem found?	—	Verify repair	Go to *Step 12*
12	1. Check the ignition coils for cracks or carbon tracking. 2. If a problem is found, repair as necessary. Was a problem found?	—	Verify repair	Go to *Step 13*
13	1. Remove spark plugs and check for wet plugs, cracks, wear, improper gap, burned electrodes, or heavy deposits. Refer to *Electronic Ignition System*. NOTE: If spark plugs are gas or oil fouled, the cause of the fouling must be determined before replacing the spark plugs. 2. If a problem is found, repair as necessary. Was a problem found?	—	Verify repair	Go to *Step 14*
14	1. Check the ECM grounds for clearness, tightness and proper routing. Refer to the ECM wiring diagrams in Electrical Diagnosis. 2. If a problem is found, repair as necessary. Was a problem found?	—	Verify repair	Go to *Step 15*
15	1. Check the MAF sensor connections. 2. If a problem is found, replace the faulty terminals as necessary. Refer to *Electrical Diagnosis* for wiring repair procedures. Was a problem found?	—	Verify repair	Go to *Step 16*
16	1. Visually/physically check vacuum hoses for splits, kinks, and proper connections and routing as shown on the "Vehicle Emission Control Information" label. 2. If a problem is found, repair as necessary. Was a problem found?	—	Verify repair	Go to *Step 17*

Hesitation, Sag, Stumble Symptom (Cont'd)

Step	Action	Value(s)	Yes	No
17	1. Review all diagnostic procedures within this table. 2. If all procedures have been completed and no malfunctions have been found, review/inspect the following: ● Visual/physical inspection ● Tech 2 data ● Freeze Frame data/Failure Records butter ● All electrical connections within a suspected circuit and/or system 3. If a problem is found, repair as necessary. Was a problem found?	—	Verify repair	Contact Technical Assistance
18	Replace the TP sensor. Is the action complete?	—	Verify repair	—

Default Matrix Table

Service Procedure Default Strategy

A referral strategy has been established to assist the technician with additional information when the cause of the failure cannot be determined. If no problem is found after performing diagnostics, then refer to the default matrix table for further diagnostic information.

Default Matrix Table

Strategy Based Diagnostic Charts	Initial Diagnosis	Default Section(s)
On-Board Diagnostic (OBD) System Check	Vehicle does not enter diagnostics.	Chassis Electrical
On-Board Diagnostic (OBD) System Check	Vehicle enters diagnostics and communicates with the Tech 2. MIL is “ON” in diagnostics. Engine does not start and run.	Ignition System Check
On-Board Diagnostic (OBD) System Check	Engine starts and runs, no ECM codes set. Customer complains of vibration.	—
On-Board Diagnostic (OBD) System Check	Engine starts and runs, no ECM codes set. Customer complains of harsh or soft shift, poor performance, delayed or no engagement into drive or reverse, transmission fluid leak, transmission noise or vibration, or improper TCC operation.	Automatic Transmission
ECM Power and Ground Check	On-Board Diagnostic (OBD) System Check.	Chassis Electrical
ECM Power and Ground Check	On-Board Diagnostic (OBD) System Check. ECM power and ground circuits OK. Data link voltage incorrect.	Chassis Electrical
On-Board Diagnostic (OBD) System Check	Engine starts and runs, no ECM codes set. Customer complains of harsh or soft shift, poor performance, delayed or no engagement into drive or reverse, transmission fluid leak, transmission noise or vibration, or improper TCC operation.	Automatic Transmission

Symptoms	Initial Diagnosis	Default Section(s)
Intermittents	1. On-board diagnostic (OBD) system check. 2. Careful visual/physical inspections.	Chassis Electrical
Hard Starts	1. OBD system check. 2. Sensors (ECT, BARO, MAF, TP) ; BARO output chart. 3. Fuel system electrical test, fuel system diagnosis. 4. Ignition system. 5. IAC system check.	Engine Mechanical, Ignition System Check, Exhaust System Diagnosis
Surges and/or Chuggles	1. OBD system check. 2. Heated oxygen sensors. 3. Fuel system diagnosis. 4. Ignition system.	Calibration ID “Broadcast” /Service Bulletins, Ignition System Check, Generator Output, Exhaust System Diagnosis

Lack of Power, Sluggish or Spongy	1. OBD system check. 2. Fuel system diagnosis. 3. Ignition system.	Refer to *Exhaust System* in *Engine Exhaust*, TCC Operation, Calibration ID/Service Bulletins
Detonation/Spark Knock	1. OBD system check. 2. Transmission range switch. 3. TCC operation. 4. Fuel system diagnosis. 5. Ignition system.	TCC operation, Cooling System, Ignition System Check, Calibration ID/Service Bulletins
Hesitation, Sag, Stumble	1. OBD system check. 2. TP. 3. BARO output check. 4. Fuel system diagnosis. 5. EVAP emission canister purge valve. 6. Ignition system.	Generator Output Voltage (refer to *Chassis Electrical*), Calibration ID/Service Bulletins, Ignition System Check
Cuts Out, Misses	1. OBD system check. 2. Cylinder balance test.	Ignition System Check
Rough, Unstable, or Incorrect Idle, Stalling	1. OBD system check. 2. Fuel injector and fuel injector balance test. 3. EVAP emission canister purge valve check. 4. Ignition system. 5. IAC operation.	BARO Output Check, Throttle Linkage, IAC System Check, A/C Clutch Control Circuit Diagnosis, Crankcase Ventilation System, Calibration ID/Service Bulletins, Generator Output Voltage (refer to *Chassis Electrical*), Exhaust Diagnosis
Poor Fuel Economy	1. OBD system check. 2. Careful visual/physical inspection. 3. Ignition system. 4. Cooling system.	TCC Operation, Exhaust System (refer to *Engine Exhaust*)
Engine Cranks But Will Not Run	1. OBD system check.	Fuel System Electrical Diagnosis, Fuel System Diagnosis, Fuel Injector and Fuel Injector Balance Test.
Excessive Exhaust Emissions or Odors	1. OBD system check. 2. Emission test. 3. Cooling system. 4. Fuel system diagnosis. 5. Fuel injector and fuel injector balance test. 6. EVAP emission canister purge valve. 7. Crankcase ventilation system. 8. Ignition system. 9. BARO output check.	Exhaust Diagnosis, Calibration ID/Service Bulletins
Dieseling, Run-On	1. OBD system check. 2. Careful visual/physical inspection. 3. Fuel system diagnosis.	—
Backfire	1. OBD system check. 2. Ignition system. 3. Fuel system diagnosis. 4. Fuel injector and fuel injector balance test.	Exhaust System Diagnosis, Intake Casting Flash, Ignition System Check

Catalyst Monitor	1. OBD system check. 2. Careful visual/physical inspection. 3. Heated oxygen sensors.	Exhaust System
Fuel Trim	1. OBD system check. 2. Careful visual/physical inspection. 3. Fuel system diagnosis. 4. Heated oxygen sensors, MAF sensors.	Exhaust System Intake Air System
Evaporative Emissions	1. OBD system check. 2. Careful visual/physical inspection. 3. Fuel system diagnosis.	—
Heated Oxygen Sensors	1. OBD system check. 2. Careful visual/physical inspection.	Exhaust System

Camshaft Position (CMP) Sensor

Removal Procedure

1. Disconnect the negative battery cable.
2. Remove the engine cover.
3. Remove the common chamber assembly.
   Refer to Common Chamber in Engine Mechanical.

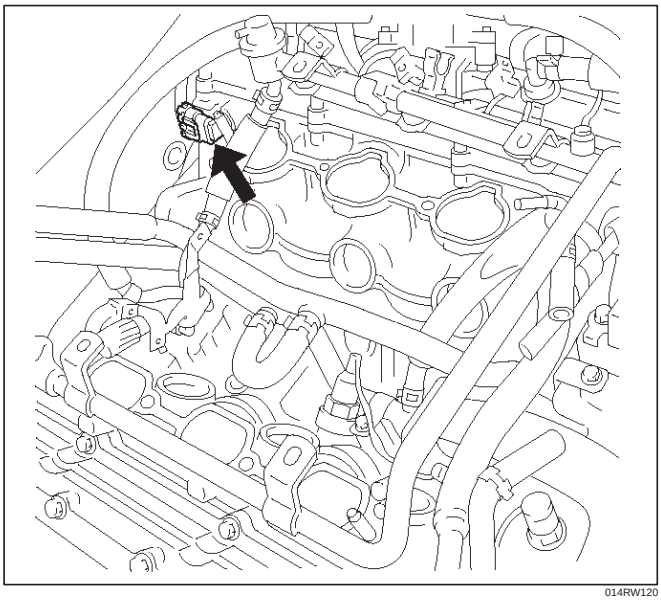

014RW120

4. Disconnect the electrical connector to the CMP sensor.

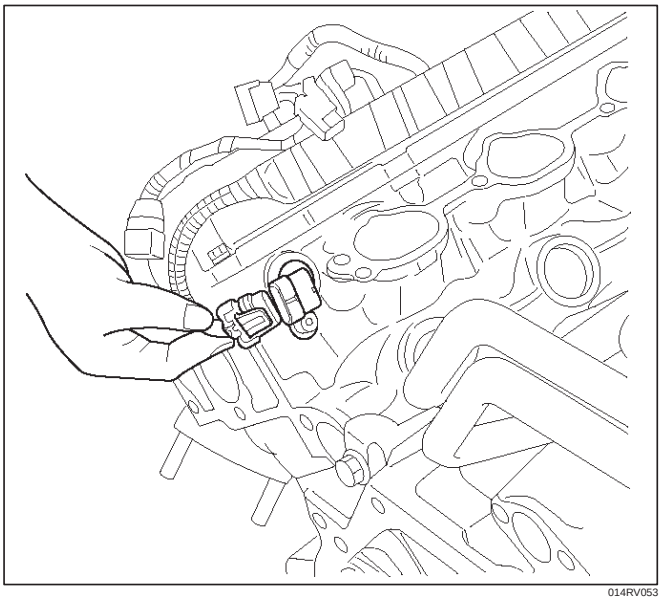

014RV053

5. Remove the CMP retaining bolt from the side of left cylinder head.
6. Remove the CMP sensor from the cylinder head.

Inspection Procedure

1. Inspect the sensor O-ring for cracks or leaks.
2. Replace the O-ring if it is worn or damaged.
3. Lubricate the new O-ring with engine oil.
4. Install the lubricated O-ring.

Installation Procedure

1. Install the CMP sensor in the cylinder head.
2. Install the CMP sensor retaining bolt.

Tighten

- **Tighten the retaining screw to 9 N·m (0.9 kg·m/78 lb in.).**

3. Connect the electrical connector to the CMP sensor.

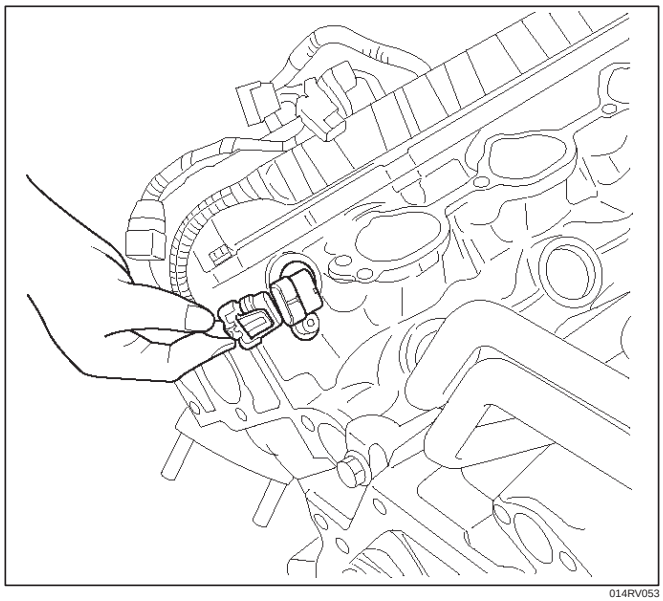

014RV053

4. Install the common chamber assembly.
   Refer to Common Chamber in Engine Mechanical.

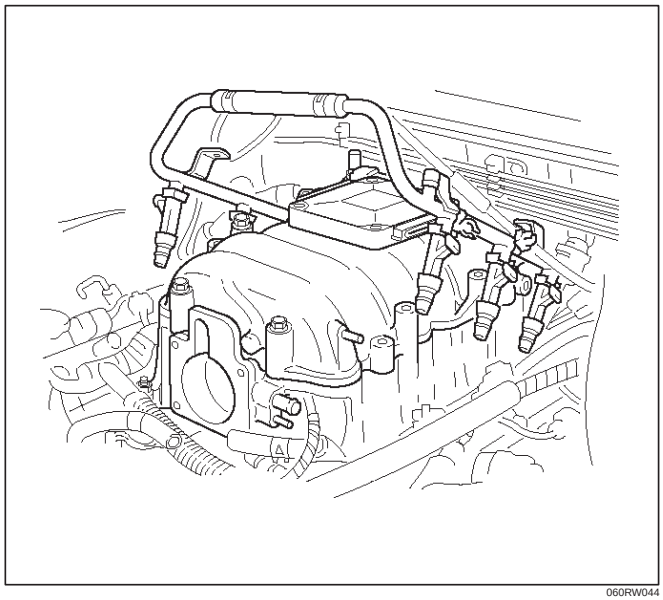

060RW044

5. Install the engine cover.
6. Connect the negative battery cable.

Crankshaft Position (CKP) Sensor

Removal Procedure

1. Disconnect the negative battery cable.
2. Disconnect the electrical connector to the CKP sensor.
3. Remove one bolt and the CKP sensor from the right side of the engine block, just behind the mount.

NOTE: Use caution to avoid any hot oil that might drip out.

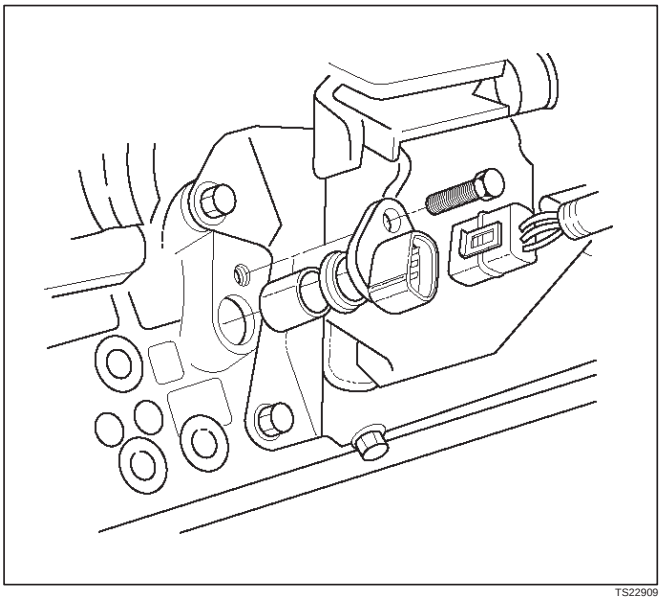

TS22909

Inspection Procedure

1. Inspect the sensor O-ring for cracks or leaks.
2. Replace the O-ring if it is worn or damaged.
3. Lubricate the new O-ring with engine oil.
4. Install the lubricated O-ring.

Installation Procedure

1. Install the CKP sensor in the engine block.
2. Install the CKP sensor mounting bolt.

Tighten

- **Tighten the mounting bolt to 9 N·m (0.9 kg·m/78 lb in.).**

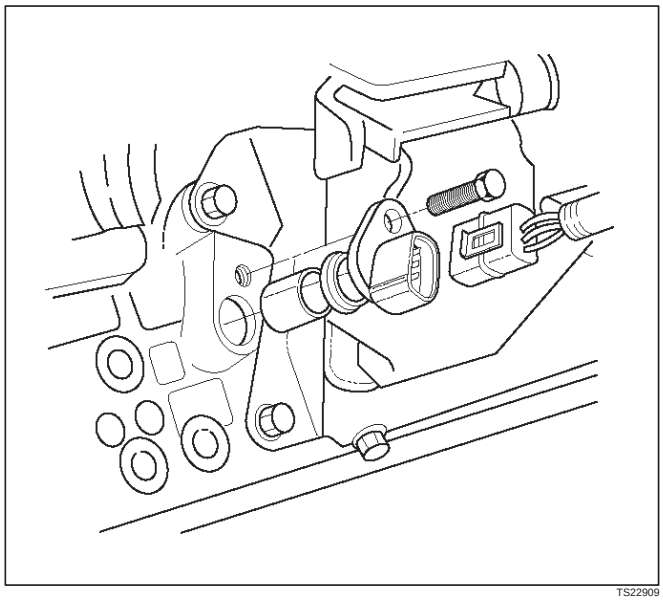

TS22909

3. Connect the electrical connector to the CKP sensor.
4. Connect the negative battery cable.

Engine Coolant Temperature (ECT) Sensor

Removal Procedure

NOTE: Care must be taken when handling the engine coolant temperature (ECT) sensor. Damage to the ECT sensor will affect proper operation of the fuel injection system.

1. Disconnect the negative battery cable.
2. Drain the radiator coolant. Refer to *Draining and Refilling Cooling System* in *Engine Cooling*.
3. Disconnect the electrical connector.

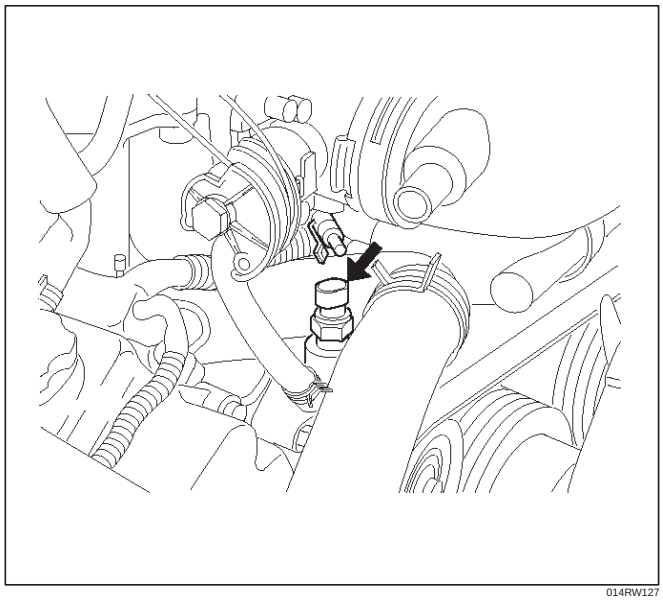

014RW127

4. Remove the ECT sensor from the coolant crossover.

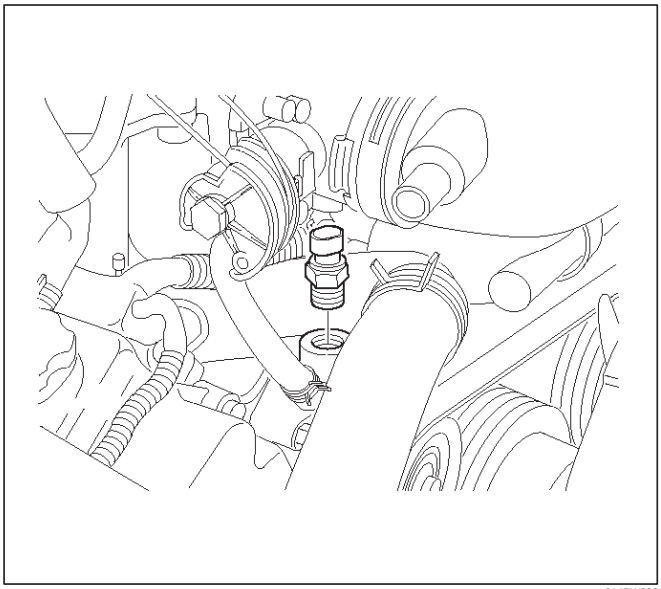

014RW086

Installation Procedure

1. Apply sealer or the equivalent to the threads of the ECT sensor.
2. Install the ECT sensor in the coolant crossover.

Tighten

- **Tighten the ECT sensor to 30 N·m (3.1 kg·m/22 lb ft.).**

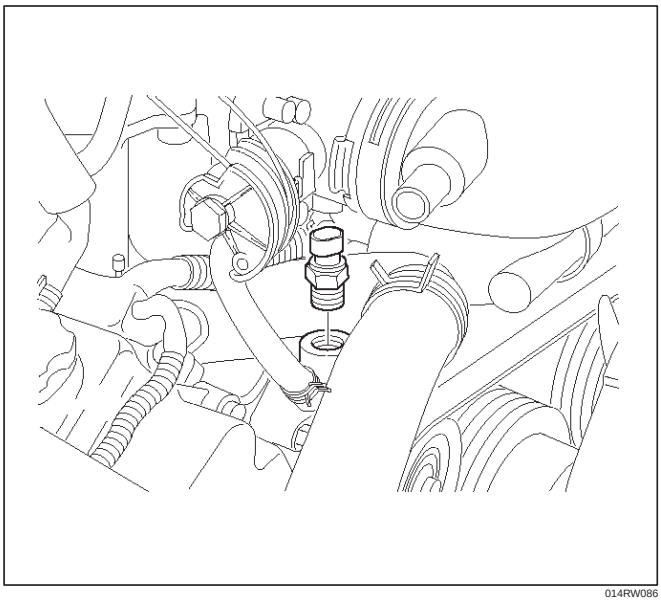

014RW086

3. Connect the electrical connector.

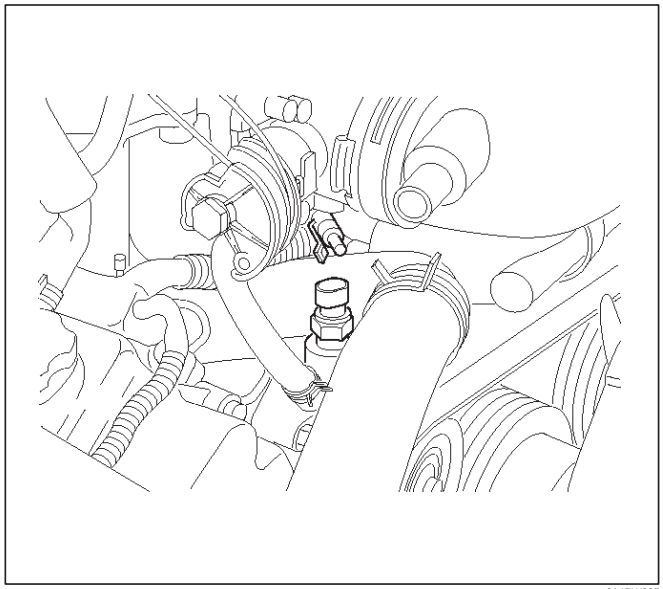

014RW085

4. Fill the radiator with coolant. Refer to *Draining and Refilling Cooling System* in *Engine Cooling*.
5. Connect the negative battery cable.

Heated Oxygen Sensor (HO2S)

Removal Procedure

1. Disconnect the negative battery cable.
2. Locate the four oxygen sensors.

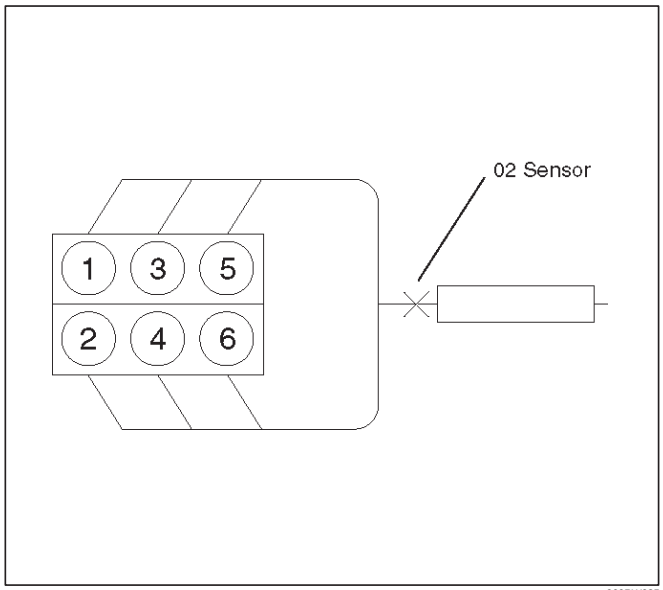

060RW035

- Sensor is mounted before the left-hand catalytic converter.

3. Disconnect the pigtail from the wiring harness.

IMPORTANT: The pigtail is permanently attached to the sensor. Be careful not to pull the wires out.

NOTE: Do not use a torch to remove an HO2S unless the sensor is being replaced. Using a torch could damage the sensor.

4. Remove the sensor from the exhaust pipe.
   - Because of the expansion and contraction of the metal in the exhaust system over time, this may be difficult if the engine temperature is below 48˚C (120˚F).

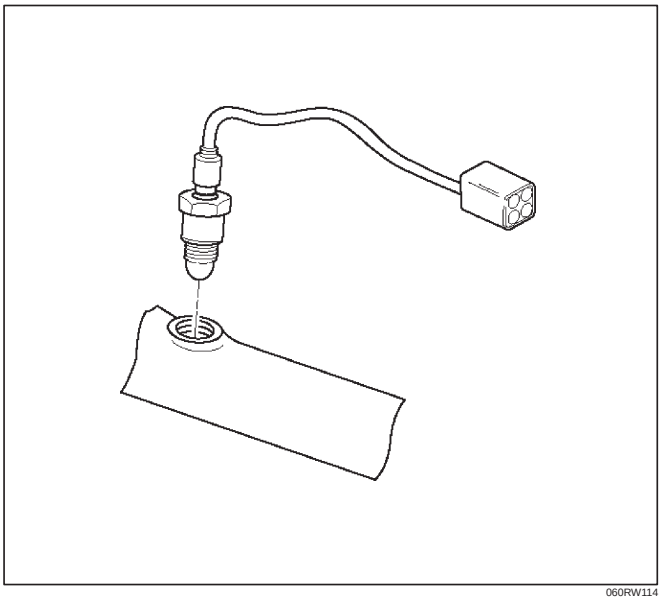

060RW114

Inspection Procedure

All four sensors are identical. Inspect each in the same way.

1. Inspect the pigtail and the electrical connector for grease, dirt, corrosion, and bare wires or worn insulation.
2. Inspect the louvered end of the sensor for grease, dirt, or other contaminations.

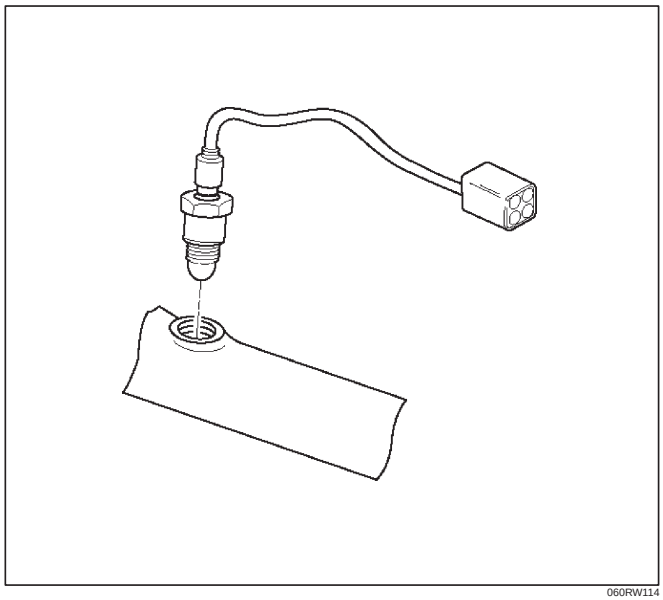

060RW114

Installation Procedure

IMPORTANT:

- A special anti-seize compound, P/N 5613695, is used on the HO2S threads. This compound consists of glass beads suspended in a liquid graphite solution. The graphite burns away with engine heat, but the glass beads will remain, making the sensor easier to remove.
- New or service sensors will already have the compound applied to the threads. If a sensor is removed and is to be reinstalled for any reason, the threads must have anti-seize compound applied.

1. Apply anti-seize compound or the equivalent to the threads of the oxygen sensor, if necessary.
2. Install the oxygen sensor on the exhaust pipe in its original position.

Tighten

- **Tighten the oxygen sensor to 55 N·m (5.5 kg·m/40 lb in.).**

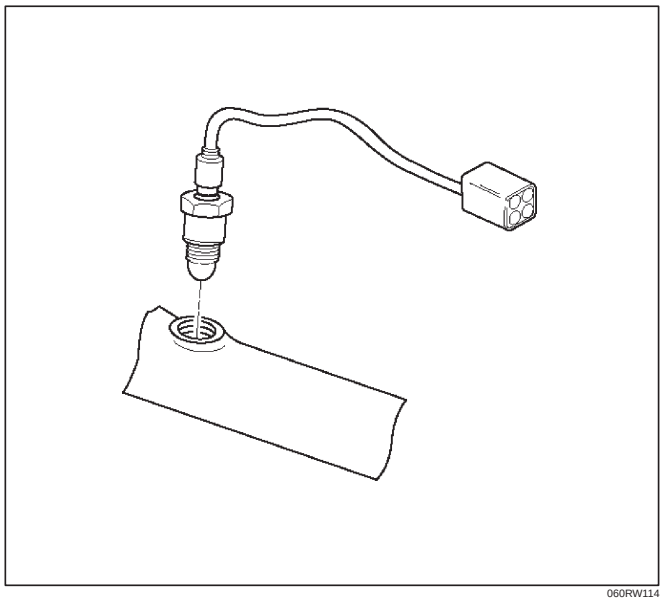

060RW114

3. Connect the pigtail to the wiring harness.
4. Connect the negative battery cable.

Intake Air Temperature (IAT) Sensor

Removal Procedure

1. Disconnect the negative battery cable.
2. Remove the engine cover
3. The IAT sensor is located in the intake air duct, behind the throttle body.
4. Disconnect the electrical connector from the IAT sensor.

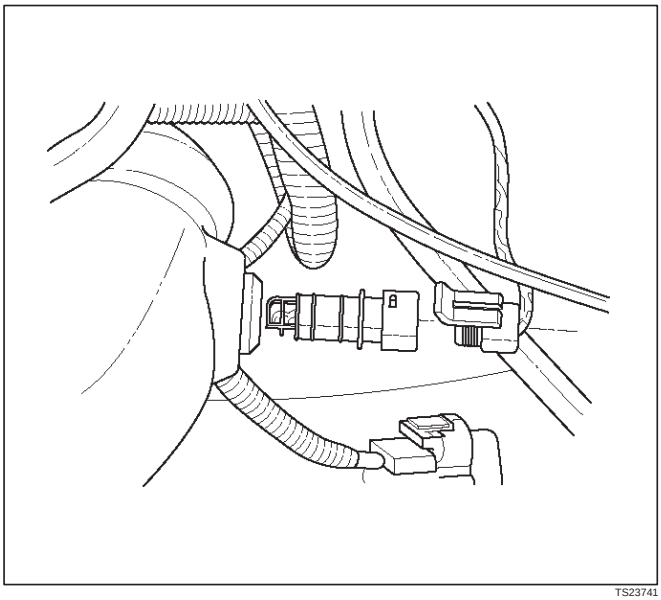

TS23741

5. Remove the IAT sensor from the intake air duct by using a rocking motion while pulling the sensor.

Installation Procedure

1. Install the IAT sensor into the grommet in the intake air duct.
2. Correct the IAT electrical connector.

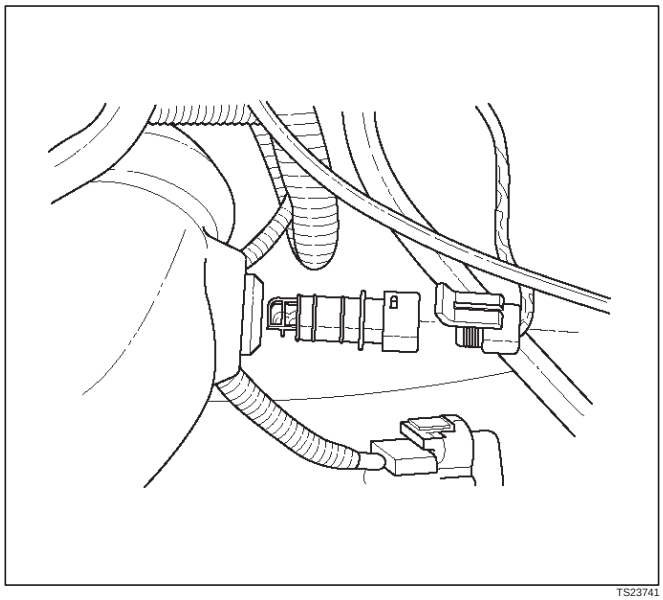

TS23741

3. Install the engine cover.
4. Connect the negative battery cable.

Mass Air Flow (MAF) Sensor

Removal Procedure

1. Disconnect the negative battery cable.
2. Disconnect the electrical connector from the MAF sensor.
3. Loosen the MAF sensor bolt (2) and remove the MAF sensor (1).

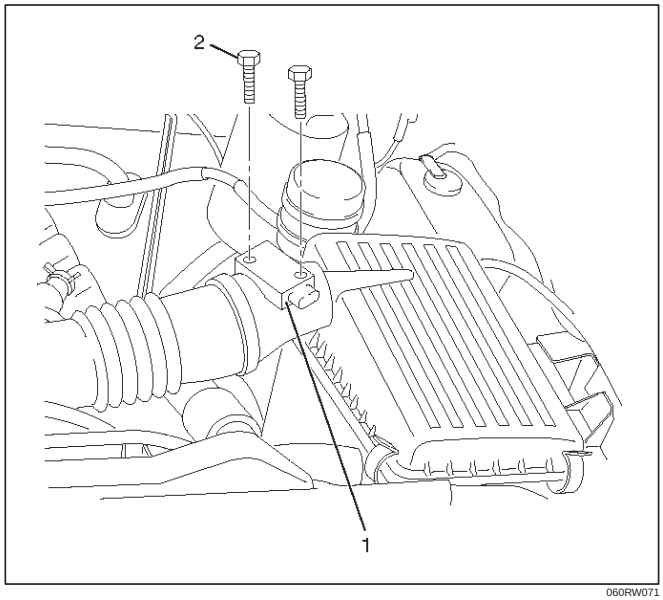

060RW071

Installation Procedure

1. Install the MAF sensor on the air duct.
2. Install bolt (2) the MAF sensor.

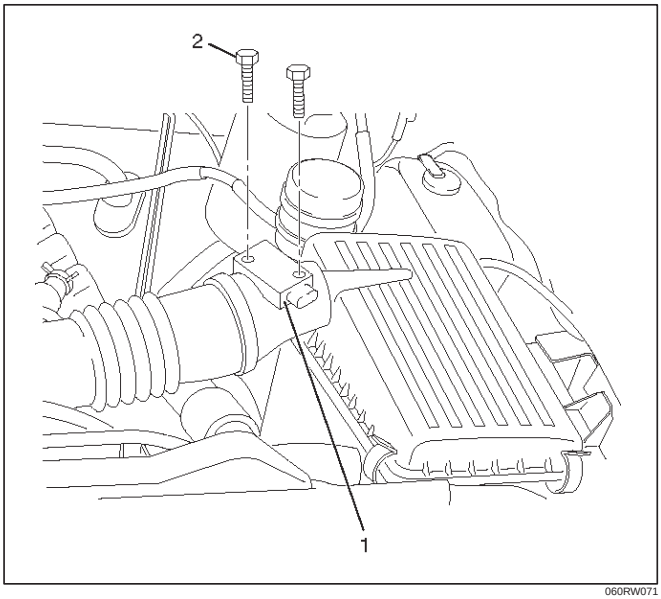

060RW071

3. Connect the negative battery cable.

Barometric Pressure (BARO) Sensor

Removal Procedure

1. Disconnect the negative battery cable.
2. Disconnect the electrical connector from the BARO sensor.

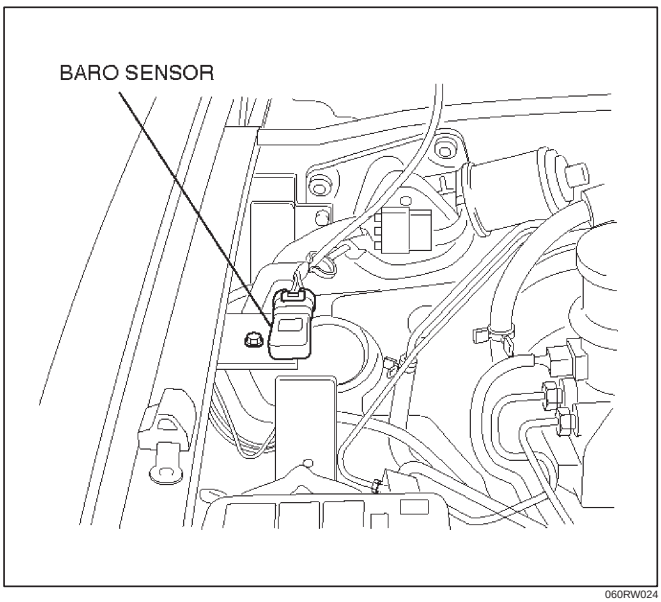

060RW024

3. Remove the BARO sensor from the mounting bracket.

Installation Procedure

1. Install the BARO sensor in the mounting bracket.
2. Connect the BARO electrical connector.

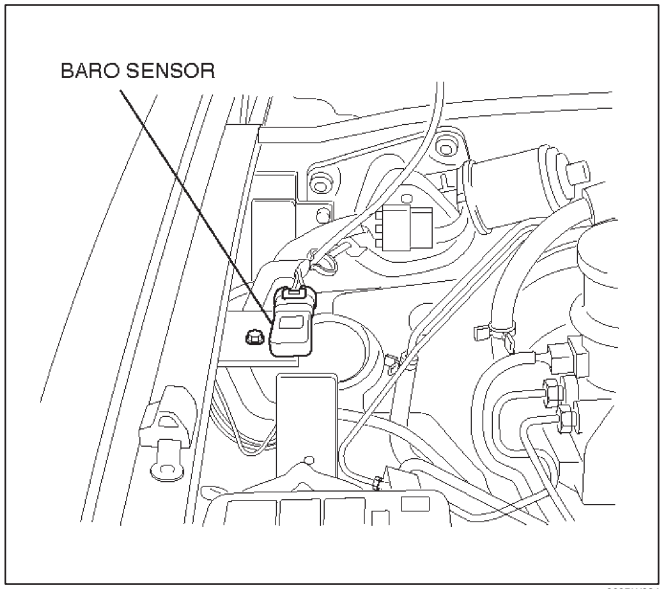

060RW024

3. Connect the negative battery cable.

Malfunction Indicator Lamp (MIL)

Removal and Installation Procedure

Refer to Warning light bulb, indicator light valve, illumination light bulb, A/T indicator light bulb in Meter and Gauge.

Engine Control Module (ECM)

Service Precaution

NOTE: To prevent possible electrostatic discharge damage to the ECM, do not touch the connector pins or soldered components on the circuit board.

Electrostatic Discharge (ESD) Damage

Electronic components used in the control systems are often designed to carry very low voltage. Electronic components are susceptible to damage caused by electrostatic discharge. Less than 100 volts of static electricity can cause damage to some electronic components. By comparison, it takes as much as 4,000 volts for a person to even feel the zap of a static discharge.

There are several ways for a person to become statically charged. The most common methods of charging are by friction and by induction. An example of charging by friction is a person sliding across a car seat.

Charging by induction occurs when a person with well insulated shoes stands near a highly charged object and momentarily touches ground. Charges of the same polarity are drained off leaving the person highly charged with the opposite polarity. Static charges can cause damage, therefore, it is important to use care when handling and testing electronic components.

NOTE: To prevent possible Electrostatic Discharge damage, follow these guidelines:

- Do not touch the control module connector pins or soldered components on the control module circuit board.
- Do not open the replacement part package until the part is ready to be installed.
- Before removing the part from the package, ground the package to a known good ground on the vehicle.
- If the part has been handled while sliding across the seat, or while sitting down from a standing position, or while walking a distance, touch a known good ground before installing the part.

NOTE: To prevent internal ECM damage, the ignition must be in the “OFF” position in order to disconnect or reconnect power to the ECM (for example: battery cable, ECM pigtail, ECM fuse, jumper cables, etc.).

IMPORTANT: When replacing the production ECM with a service ECM, it is important to transfer the broadcast code and production ECM number to the service ECM label. This will allow positive identification of ECM parts throughout the service life of the vehicle. Do not record this information on the metal ECM cover.

IMPORTANT: The ignition should always be in the “OFF” position in order to install or remove the ECM connectors.

Service of the ECM should normally consist of either replacement of the ECM. If the diagnostic procedures call for the ECM to be replaced, the ECM should be checked first to ensure it is the correct part. If it is, remove the faulty ECM and install the new service ECM.

DTC P0601 indicates the check sum error.

Removal Procedure

1. Disconnect the negative battery cable.
2. Disconnect the ECM connector.
3. Remove the four bolts.
4. Remove the ECM from the common chamber.

Installation Procedure

1. Install the ECM with four bolts on the common chamber.
2. Connect the ECM connector.

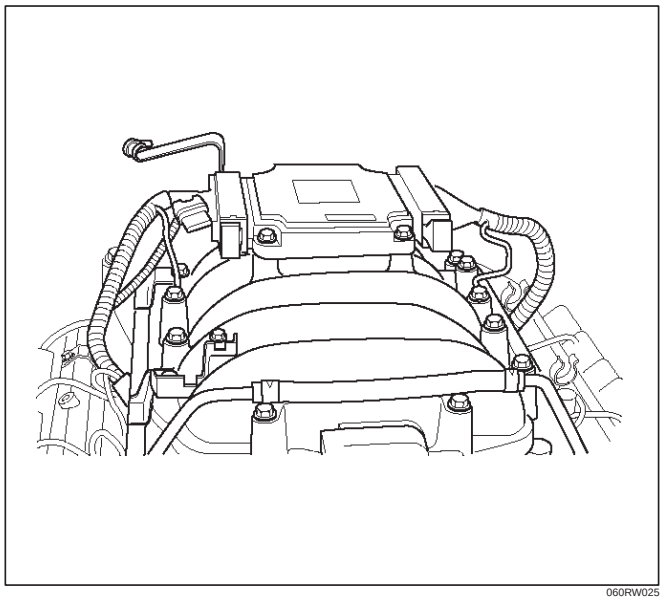

060RW025

3. Connect the negative battery cable.

If the ECM is replaced, the new ECM will need to be programmed.

EEPROM

General Description

The Electronically Erasable Programmable Read Only Memory (EEPROM) is a permanent memory that is physically soldered within the ECM. The EEPROM contains program and calibration information that the ECM needs to control powertrain operation.

Functional Check

1. Perform the On-Board Diagnostic System Check.
2. Start the engine and run for one minute.
3. Scan for DTCs using the Tech 2.

Power Steering Pressure (PSP) Switch

General Description

The Power Steering Pressure (PSP) switch closes when the hydraulic pressure reaches 3920 ± 690 kpa (570 ± 100 psi). This causes the ECM to actuate the idle air control valve in order to prevent the additional load from slowing down the engine. The switch opens when the hydraulic pressure drops to 2970 ± 560 kpa (430 ± 80 psi).

Removal Procedure

1. Disconnect the PSP switch pigtail from the wiring harness.
   - The pigtail is permanently attached to the switch. Do not attempt to remove the wires from the sensor.
   - Have a container ready to catch the power steering fluid that leaks out of the line when the switch is removed.
2. Remove the PSP switch from the power steering line.
   - Plug the line to prevent excessive loss of fluid and possible contamination of the power steering system.

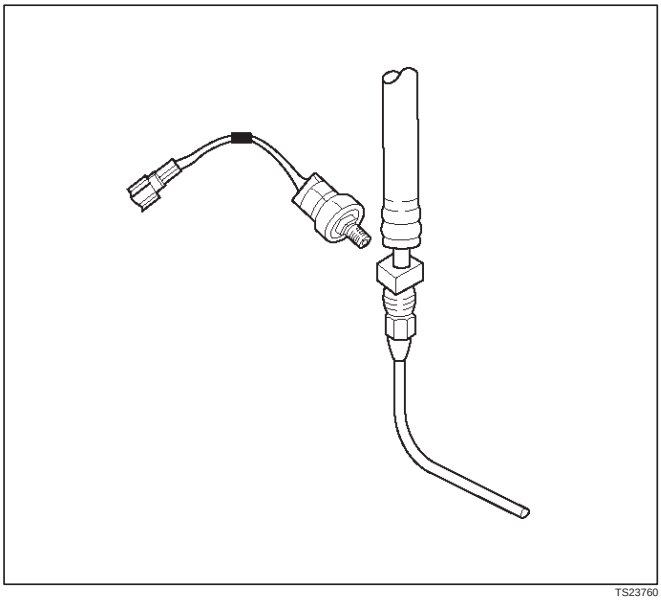

TS23760

Installation Procedure

1. Install the PSP switch in the power steering line.

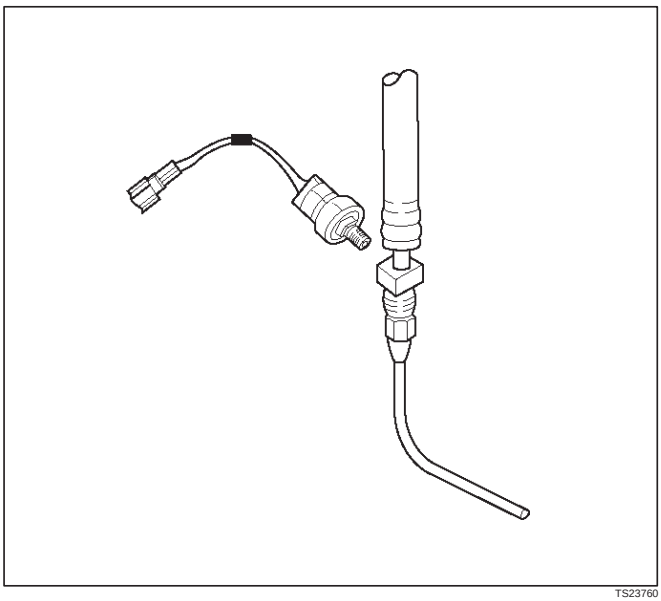

TS23760

2. Connect the PSP switch pigtail to the wiring harness.
3. Check the power steering fluid level. Refer to *Power Steering*.
4. Start the engine. Watch the PSP switch for signs of fluid leakage.

Throttle Position (TP) Sensor

Removal Procedure

1. Disconnect the negative battery cable.
2. Disconnect the TPS electrical connector.
3. Remove the bolts and the TP sensor from the throttle body.

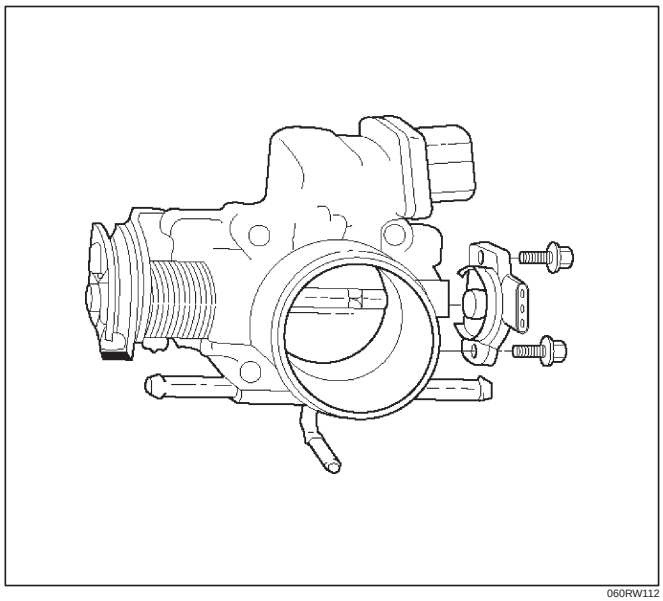

060RW112

NOTE: Do not clean the TP sensor by soaking it in solvent. The sensor will be damaged as a result.

Function Check

Use a Tech 2 to check the TP sensor output voltage at closed throttle.

- The voltage should be under 0.85 volt.
- If the reading is greater than 0.85 volt, check the throttle shaft to see if it is binding. Check that the throttle cable is properly adjusted, also. Refer to *Throttle Cable Adjustment*.
- If the throttle shaft is not binding and the throttle cable is properly adjusted, install a new TP sensor.

Installation Procedure

1. Install the TP sensor on the throttle body with the bolts.

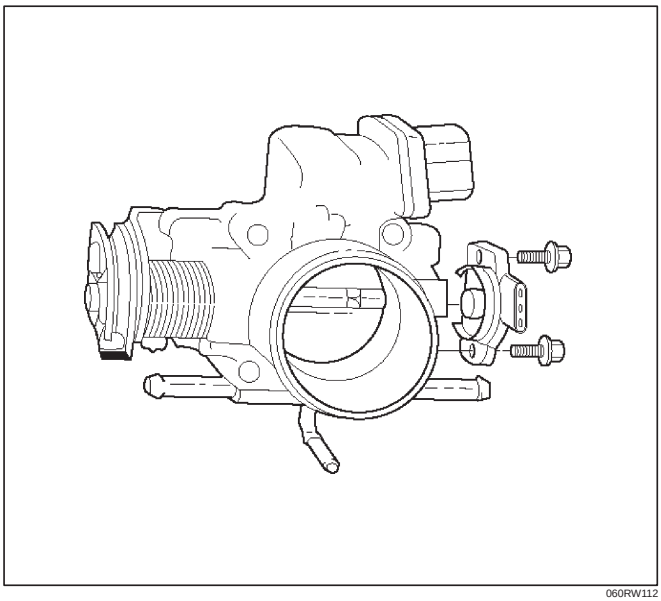

060RW112

2. Connect the TP electrical connector.
3. Install the negative battery cable.

Vehicle Speed Sensor (VSS)

Removal Procedure

CAUTION: The VSS is located on the right side of the transfer case just ahead of the rear propeller shaft and very close to the exhaust pipes. Be sure that the exhaust pipes are cool enough to touch before trying to remove the VSS. If the pipes are hot, you could be burned.

1. Disconnect the negative battery cable.
2. Disconnect the VSS electrical connector.

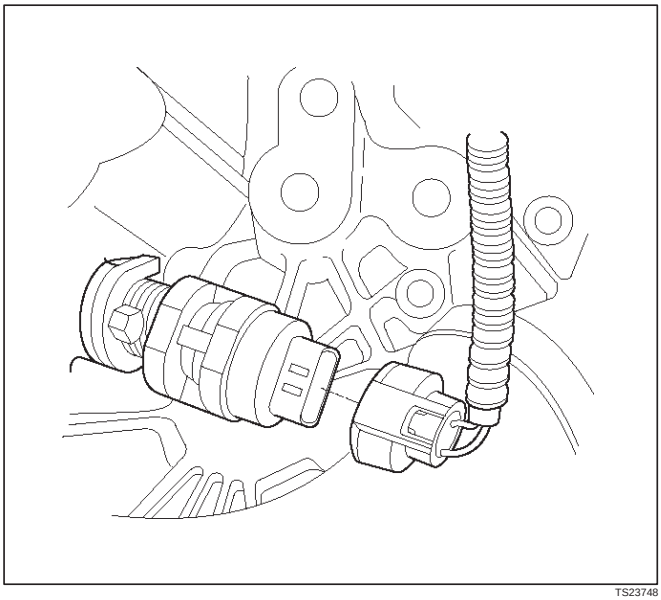

TS23748

3. Remove the bolt and the clamp securing the VSS in place.

IMPORTANT: Have a container ready to catch any fluid that leaks out when the VSS is removed from the transfer case.

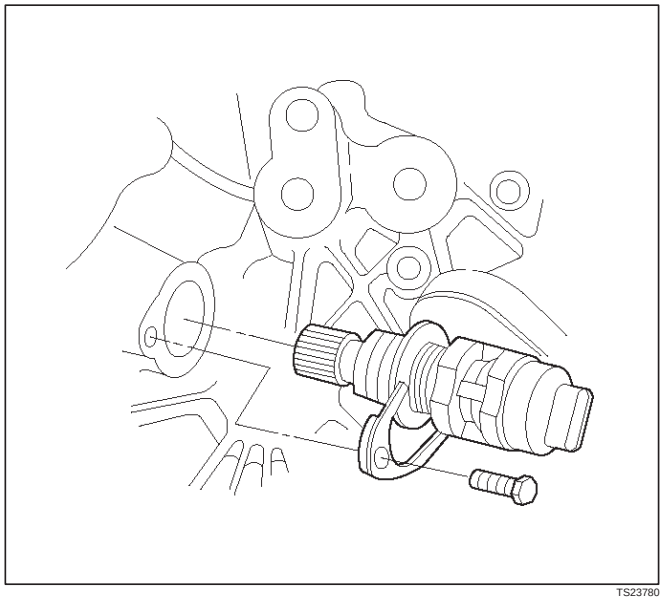

TS23780

4. Remove the VSS from the transfer case by wiggling it slightly and pulling it straight out.

Inspection Procedure

1. Inspect the electrical connector for signs of corrosion or warping. Replace the VSS if the electrical connector is corroded or warped.
2. Inspect the VSS driven gear for chips, breaks, or worn condition. Replace the VSS if the driven gear is chipped, broken or worn.
3. Inspect the O-ring for wear, nicks, tears, or looseness. Replace the O-ring if necessary.

Installation Procedure

1. Install the VSS in the transfer case with the notch for the connector facing the rear.

2. Secure the VSS in place with the clamp and the bolt.

Tighten

- **Tighten the bolt to 16 N·m (1.6 kg·m/12 lb ft.).**

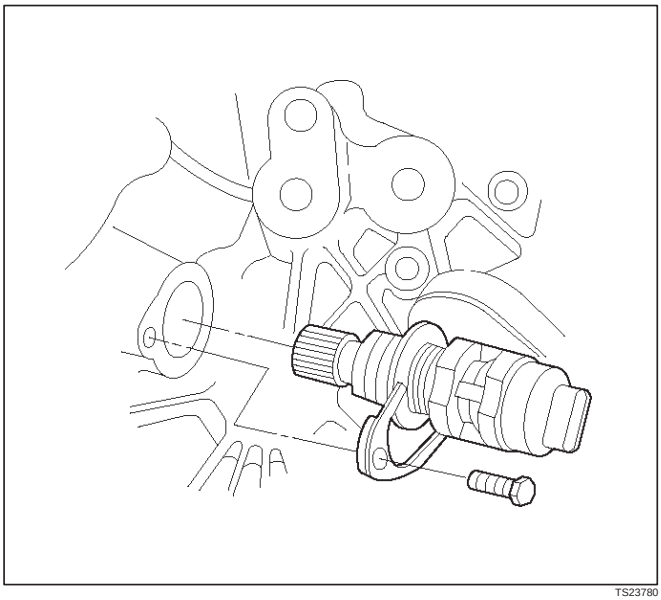

TS23780

3. Connect the VSS electrical connector.

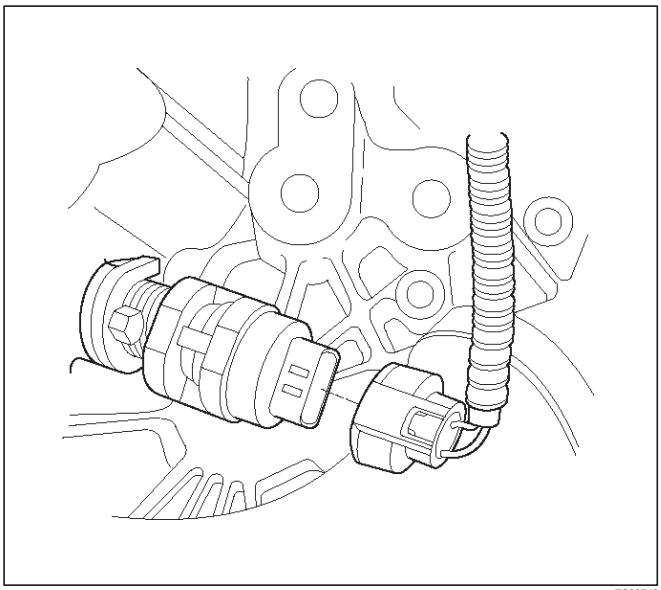

TS23748

4. Check the transfer case oil level. Add fluid if necessary.
5. Connect the negative battery cable.

Air Cleaner/Air Filter

Removal Procedure

1. Loosen the clamp between the air cleaner lid and the duct.
2. Release the four latches securing the lid to the air cleaner housing.
3. Remove the air cleaner lid.
4. Remove the air filter element.

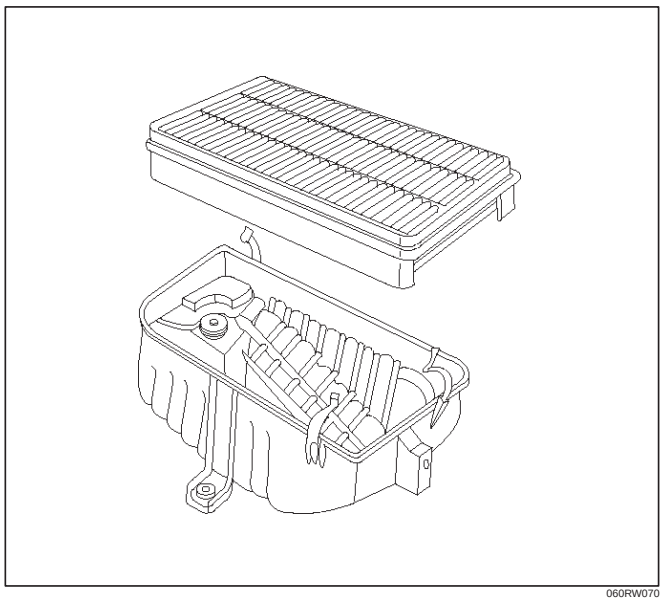

060RW070

5. Remove the retaining bolts and the air cleaner housing from the vehicle.

Installation Procedure

1. Install the air cleaner housing in the vehicle with the retaining bolts.
2. Install the air filter element in the air cleaner housing.

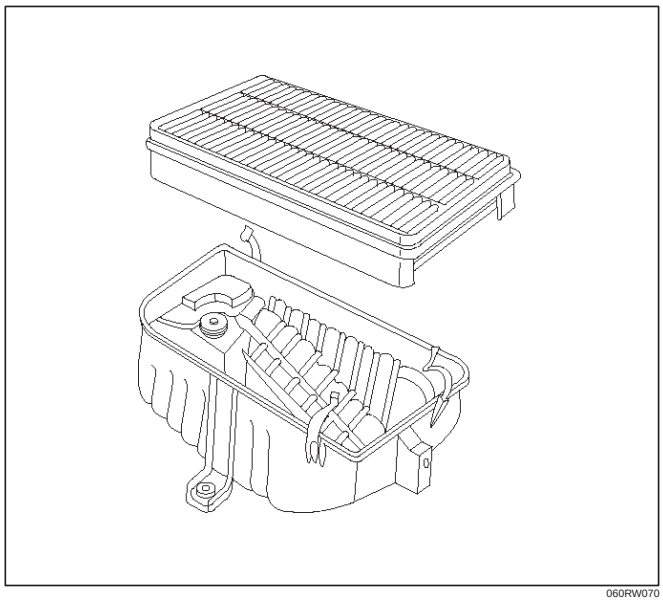

060RW070

3. Install the air cleaner lid on the air duct and the air cleaner housing.
4. Tighten the clamp and secure the four latches between the lid and the air cleaner housing.

Idle Air Control (IAC) Valve

Removal Procedure

1. Disconnect the negative battery cable.
2. Disconnect the IAC electrical connector.
3. Remove the bolts and the IAC valve from the throttle body.

NOTE: Do not clean the IAC valve by soaking it in solvent. The valve will be damaged as a result.

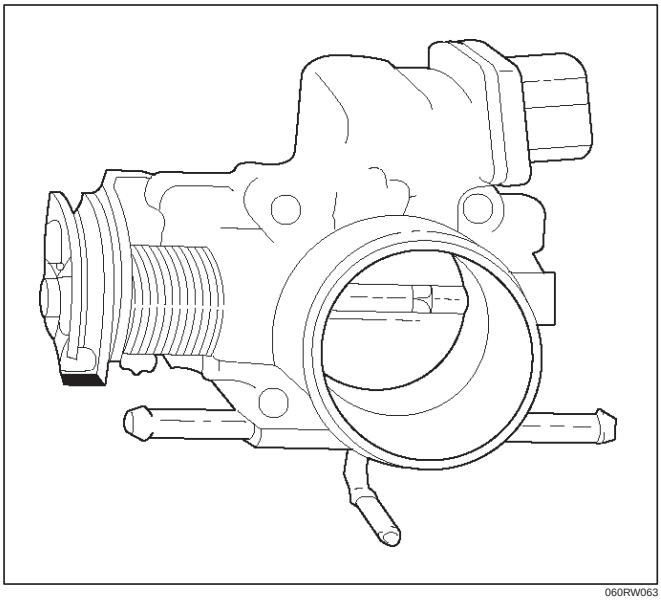

060RW063

Cleaning, Inspection, and Measurement Procedure

- Clean the IAC valve O-ring sealing surface, pintle valve seat and air passage.
  - Use carburetor cleaner and a parts cleaning brush to remove carbon deposits. Do not use a cleaner that contains methyl ethyl ketone. This is an extremely strong solvent and not necessary for this type of deposit.
  - Shiny spots on the pintle are normal and do not indicate misalignment or a bent pintle shaft.
  - If the air passage has heavy deposits, remove the throttle body for complete cleaning.

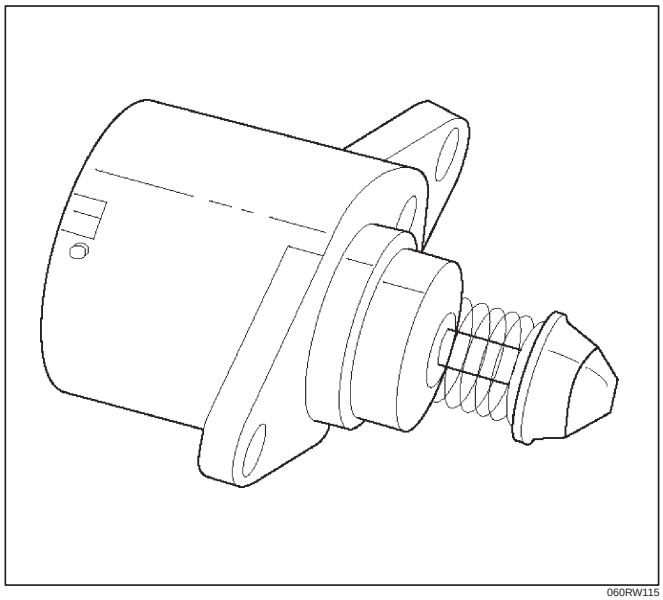

060RW115

- Inspect the IAC valve O-ring for cuts, cracks, or distortion. Replace the O-ring if damaged.
- In order to install a new IAC valve, measure the distance between the tip of the pintle and the mounting flange. If that measurement is 28 mm (1.1 in.) or less, the valve needs no adjustment. If the measurement is greater than 28 mm (1.1 in.), apply finger pressure and retract the valve. The force required to retract the pintle on a new valve will not damage the valve, shaft, or pintle.

NOTE: Do not push or pull on the IAC valve pintle on IAC valves that have been in service. The force required to move the pintle may damage it.

IMPORTANT: Use an identical replacement part in order to replace a valve. IAC valve pintle shape and diameter are designed for the specific application.

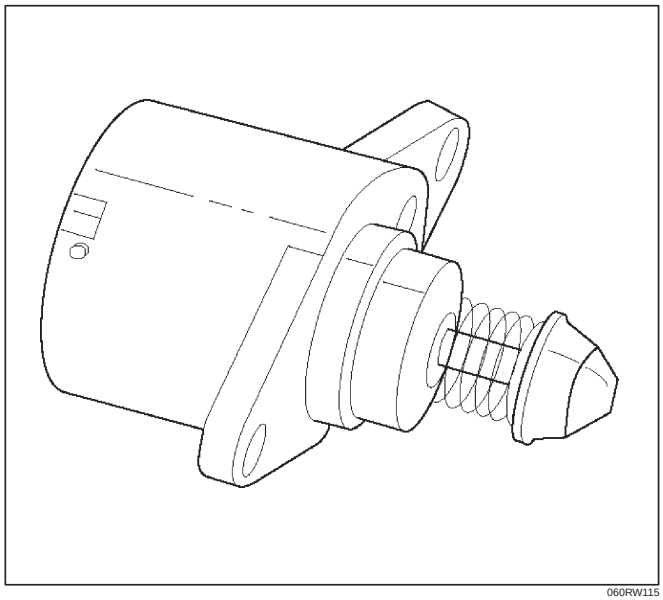

060RW115

Installation Procedure

1. Install the IAC valve on the throttle body with the bolts.

Tighten

- **Tighten the bolts to 1 N·m (0.1 kg·m/9 lb in.).**

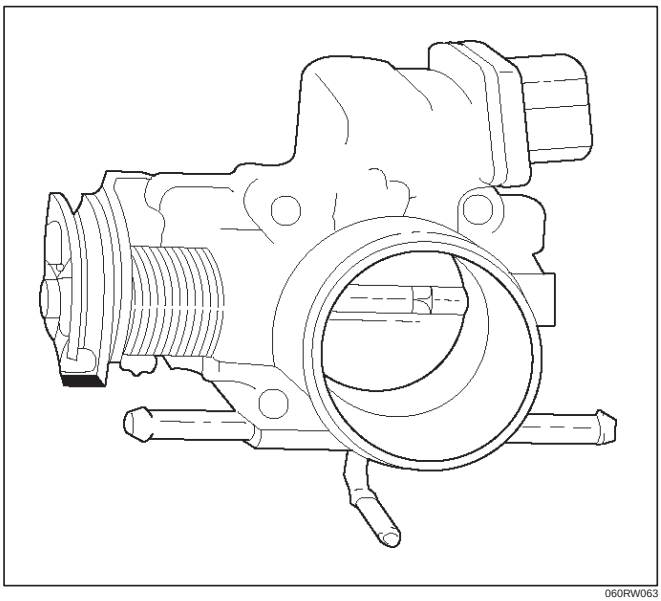

060RW063

2. Connect the IAC valve electrical connector.
3. Install the negative battery cable.

Common Chamber

Removal and Installation Prodedure

Refer to Common Chamber in Engine Mechanical.

Accelerator Cable Assembly

Removal Procedure

1. Loosen the nut on the cable bracket mounting on the common chamber.

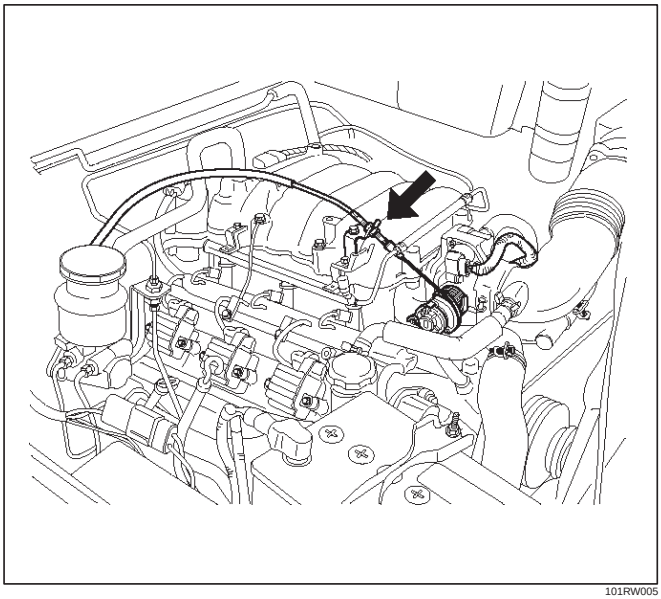

101RW005

2. Remove the accelerator control cable (on the throttle valve end).

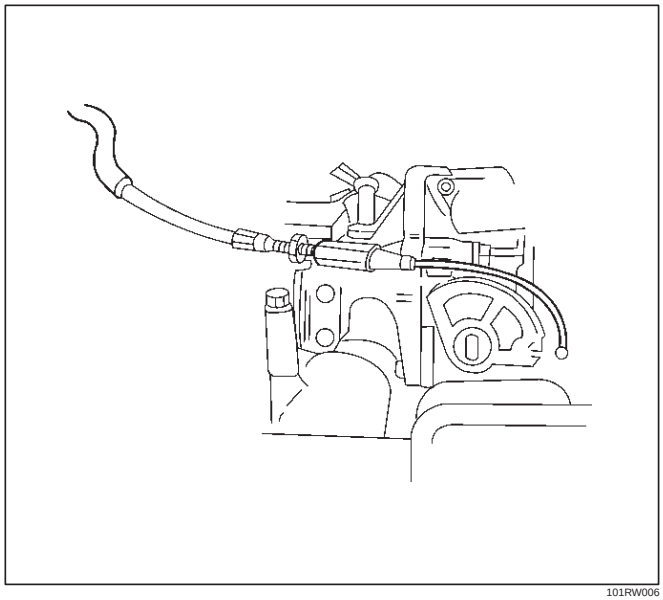

101RW006

3. Remove the accelerator control cable (on the accelerator pedal end).

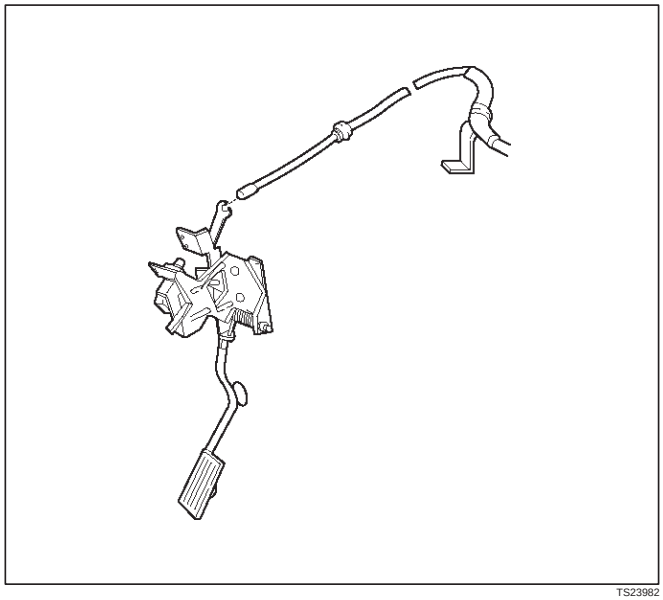

TS23982

4. Remove the grommet.

5. Remove the accelerator control cable.

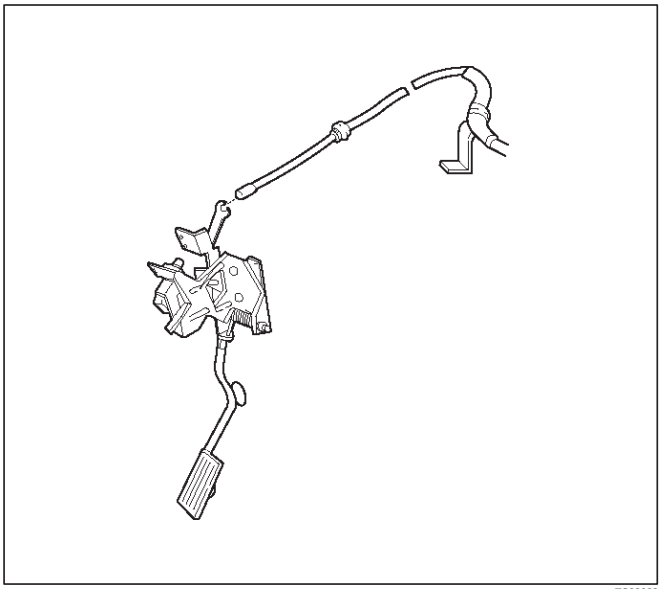

TS23983

Inspection Procedure

Check the following items, and replace the control cable if any abnormality is found:

- The control cable should move smoothly.
- The control cable should not be bent or kinked.
- The control cable should be free of damage and corrosion.

Installation Procedure

1. Install the accelerator control cable.

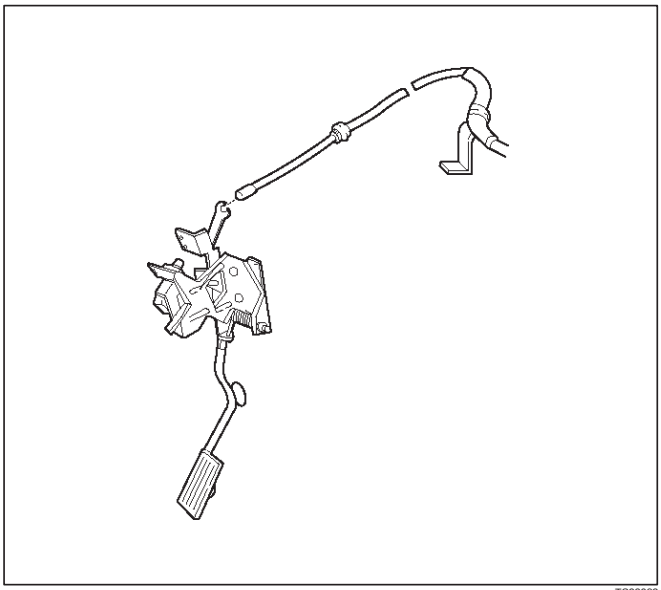

TS23983

2. Install the grommet.
3. Install the accelerator control cable (on the accelerator pedal end).

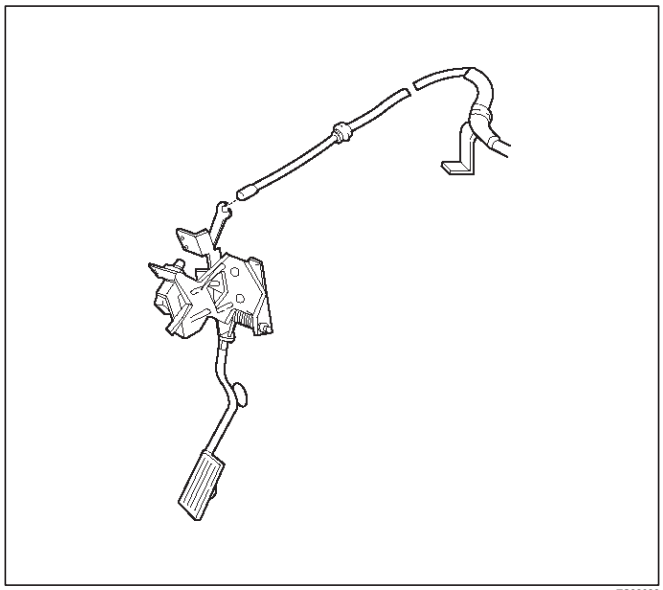

TS23982

4. Install the accelerator control cable (on the throttle valve end).

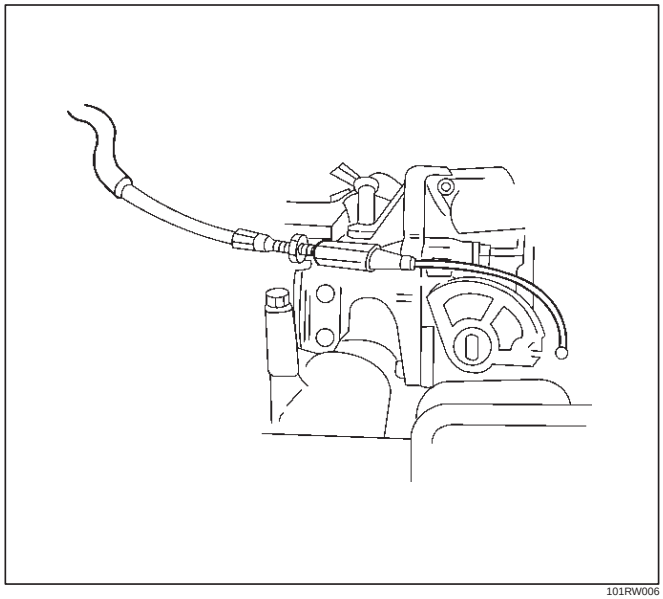

101RW006

5. Install the nut.

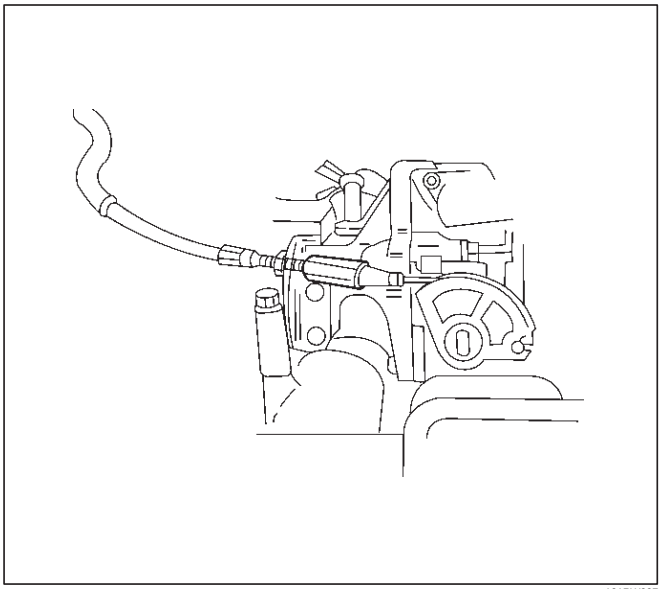

101RW007

Accelerator Pedal Replacement

Removal Procedure

1. Disconnect the cruise control cable from the accelerator pedal assembly.

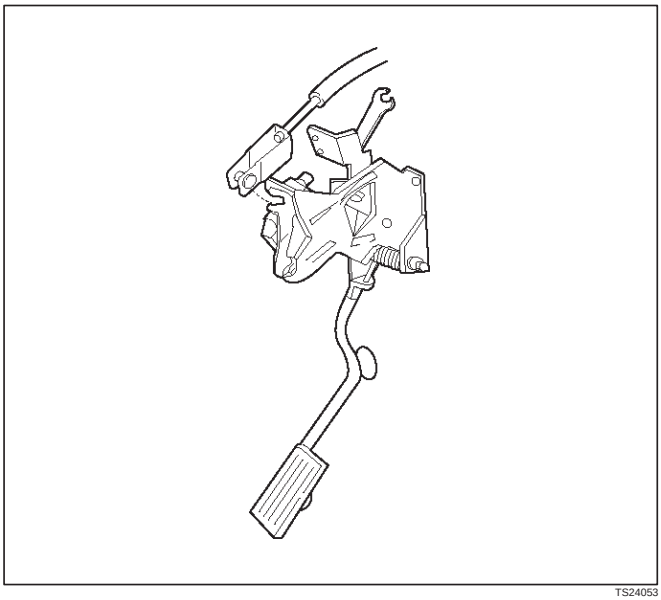

TS24053

2. Disconnect the accelerator pedal control cable from the accelerator pedal assembly.

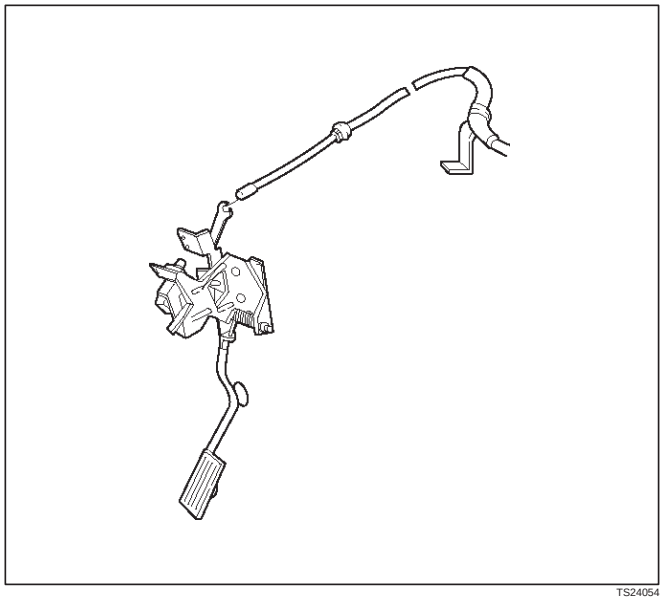

TS24054

3. Disconnect the wiring harness from the kick-down switch.

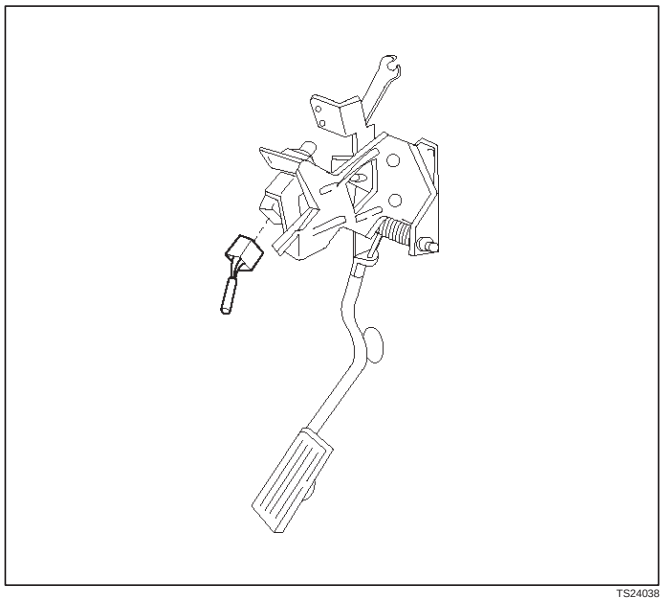

TS24038

4. Remove the two screws from the accelerator pedal assembly.

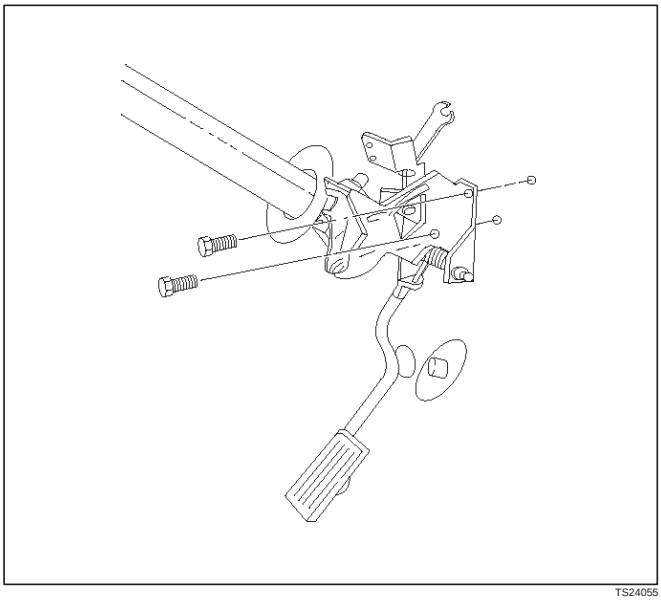

TS24055

5. Remove the accelerator pedal assembly from the bulkhead.

Installation Procedure

1. Install the accelerator pedal assembly on the bulkhead.
2. Install the two screws to the accelerator pedal assembly.

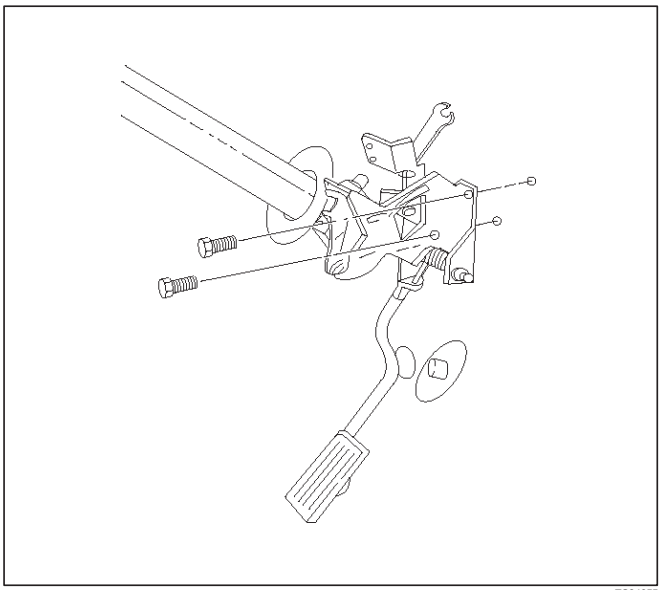

TS24055

3. Connect the wiring harness to the kick-down switch.

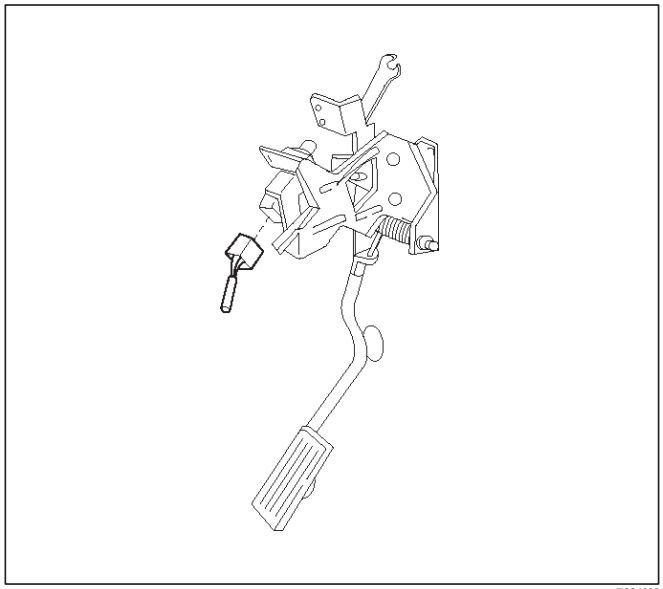

TS24038

4. Connect the accelerator pedal control cable to the accelerator pedal assembly.

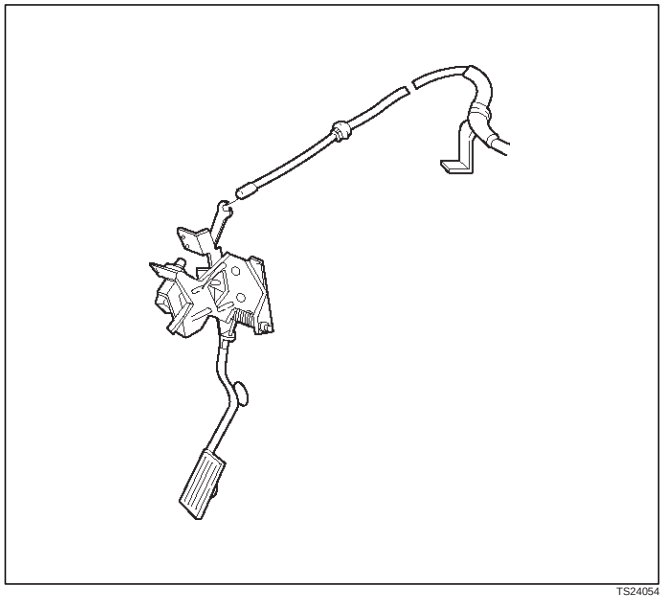

TS24054

5. Connect the cruise control cable to the accelerator pedal assembly.

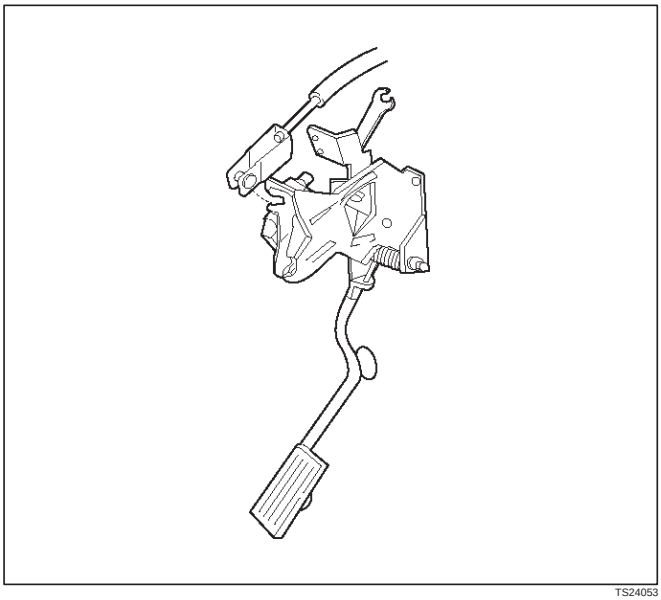

TS24053

Fuel Fillter Cap

General Description

The fuel filler cap includes a vacuum valve and a pressure valve.
If high vacuum or high pressure occurs in the fuel tank, each valve works to adjust the pressure in order to prevent damage to the tank at the EGR valve.

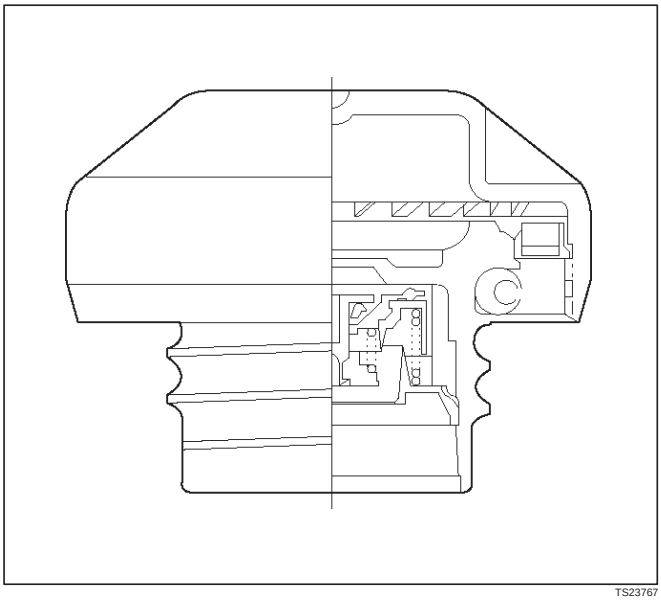

TS23767

Inspection Procedure

NOTE: Replace the fuel filler cap with the same type of filler cap that was originally installed on the vehicle.

- Check the seal ring in the filler cap for any abnormality and for seal condition.
- Replace the filler cap if any abnormality is found.

Fuel Filter

Removal Procedure

1. Disconnect the negative battery cable.
2. Remove the fuel filler cap.
3. Disconnect the fuel line from the fuel filter on the engine side.
4. Disconnect the fuel line from the fuel filter on the fuel tank side.

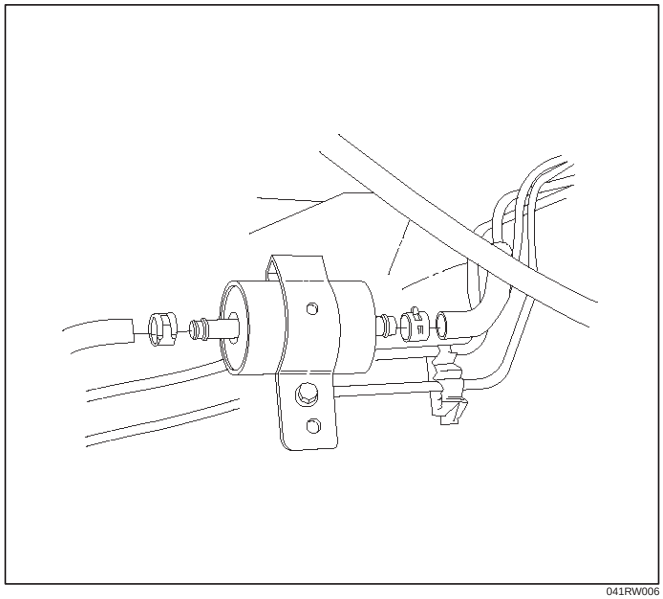

041RW006

5. Remove the bolt on the fuel filter holder.

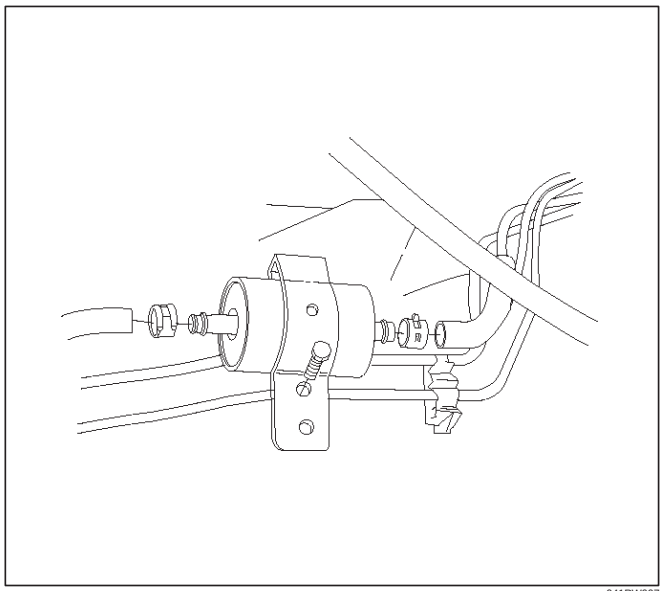

041RW007

6. Remove the fuel filter.

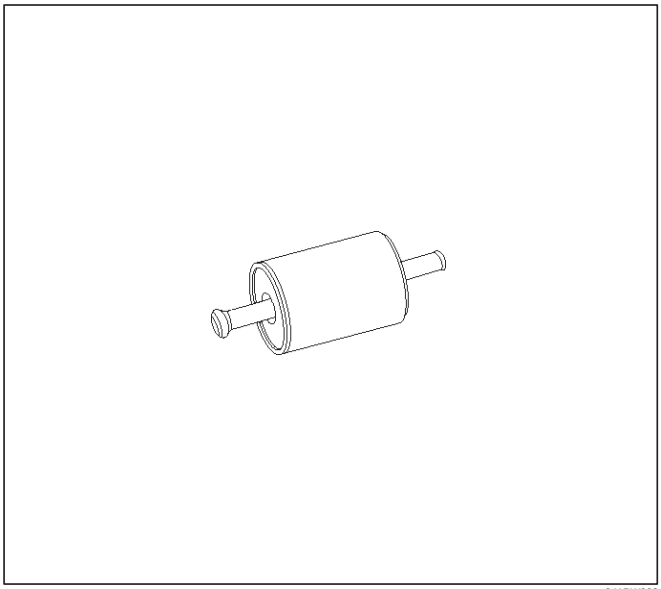

041RW008

Inspection Procedure

1. Replace the fuel filter when the following occur:
   - Fuel leaks from the fuel filter body.
   - The fuel filter body is damaged.
   - The fuel filter is clogged with dirt or sediment.
2. If the drain hole is clogged, clean the drain.

Installation Procedure

1. Install the fuel filter in the correct direction.

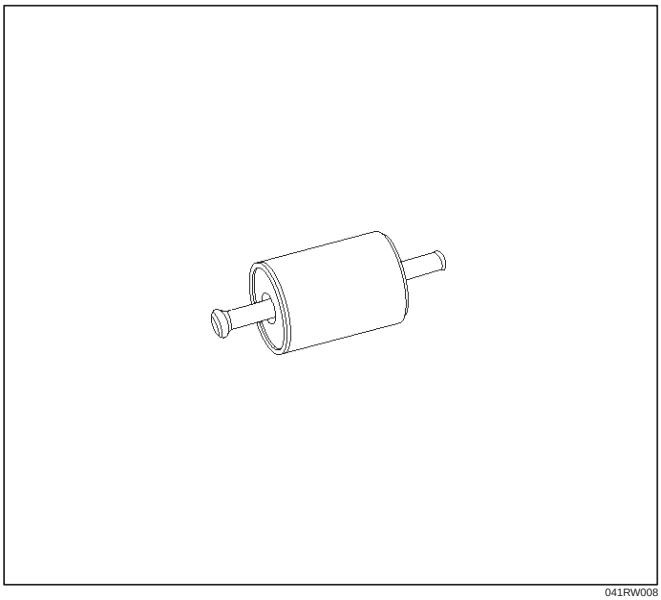

041RW008

2. Install the bolt on the fuel filter holder.

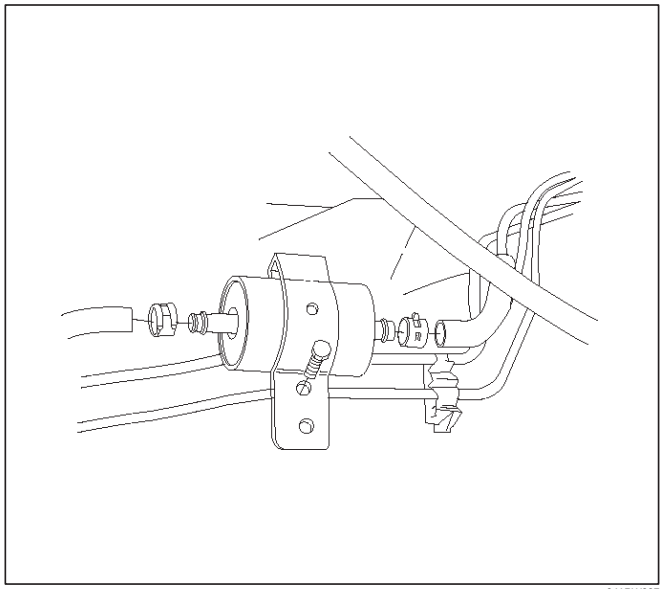

041RW007

3. Connect the fuel line on the engine side.
4. Connect the fuel line on the fuel tank side.

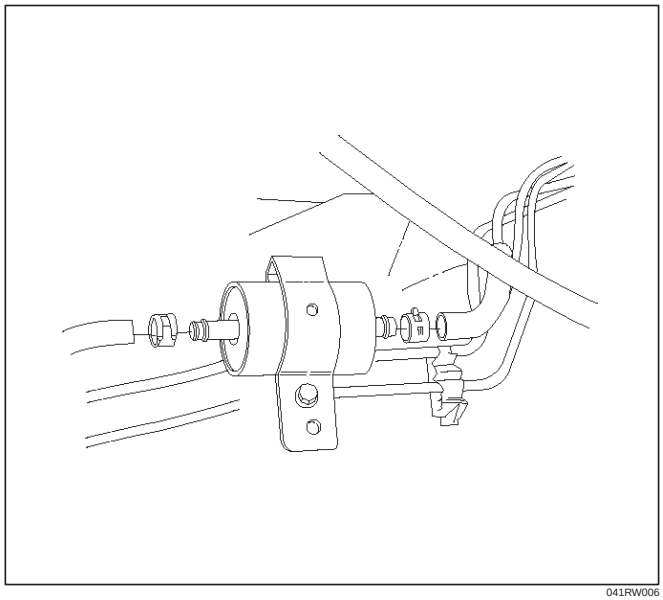

041RW006

5. Install the fuel filler cap.
6. Connect the negative battery cable.

Fuel Gauge Unit

Removal Procedure

Refer to *Fuel Gauge Unit In Engine Fuel.*

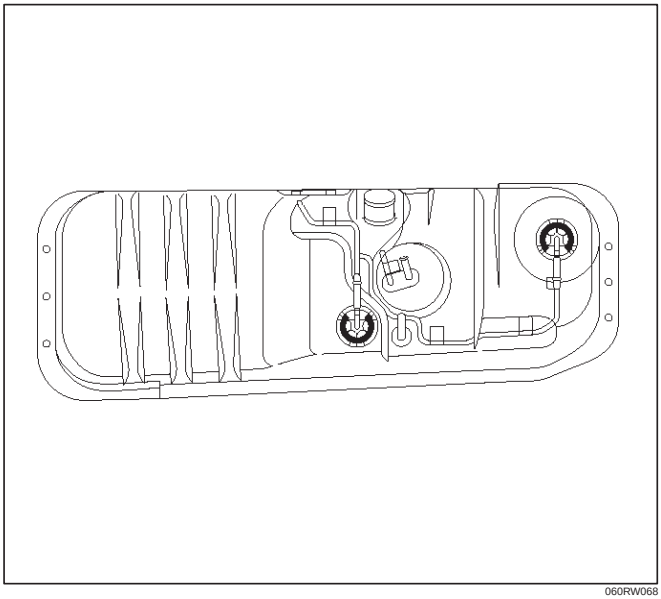

060RW068

Fuel Injectors

Removal Procedure

NOTE: If the fuel injectors are leaking, the engine oil may be contaminated with fuel. Check the oil for signs of contamination and change the oil and the filter if necessary.

NOTE: Use care in removing the fuel injectors in order to prevent damage to the fuel injector electrical connector pins or the fuel injector nozzles. The fuel injector is an electrical component and should not be immersed in any type of cleaner as this may damage the fuel injector.

IMPORTANT: Fuel injectors are serviced as a complete assembly only.

1. Disconnect the negative battery cable.
2. Remove the upper intake manifold. Refer to *Common Chamber in Engine Mechanical.*.
3. Remove the fuel rail. Refer to *Fuel Rail*.

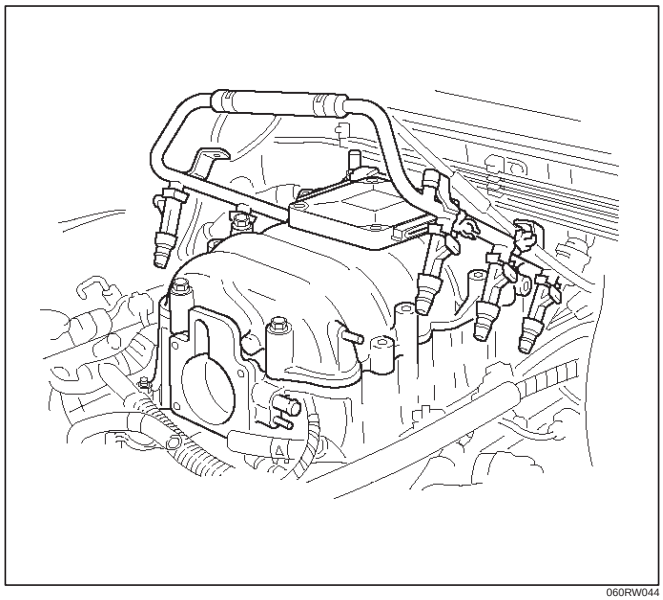

060RW044

4. Remove the injector retainer clip.

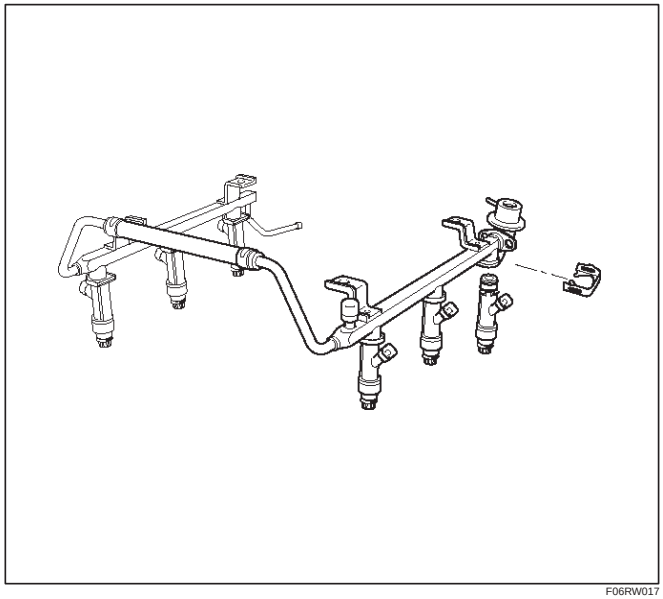

F06RW017

5. Remove the fuel injector assembly.
6. Remove the O-ring from the fuel injector.
7. Remove the O-ring backup from the fuel injector .

Inspection Procedure

1. Inspect the O-rings for cracks or leaks.
2. Replace worn or damaged O-rings.
3. Lubricate the new O-rings with engine oil before installation.

Installation Procedure

1. Install the O-ring backup on the fuel injector.
2. Install the new O-ring on the fuel injector.
3. Install the fuel injector on the fuel rail.

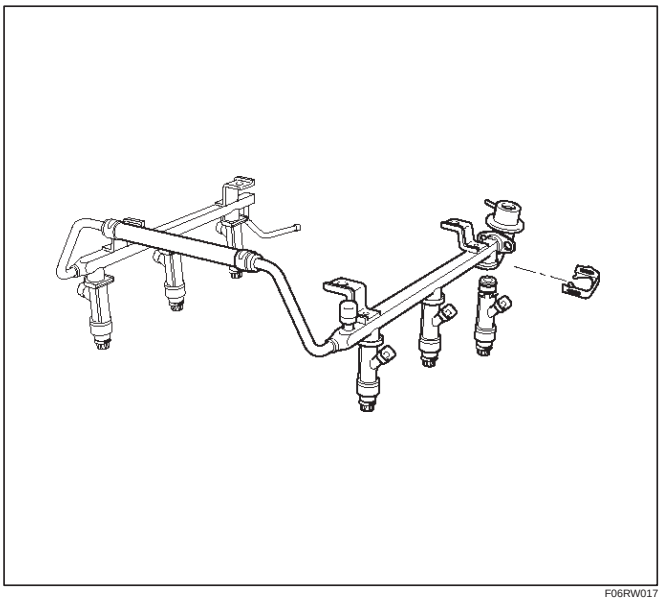

F06RW017

4. Use new fuel injector retainer clips to retain the fuel injector to the fuel rail.
5. Coat the end of the fuel injector with engine oil.
6. Install the fuel rail. Refer to *Fuel Rail*.

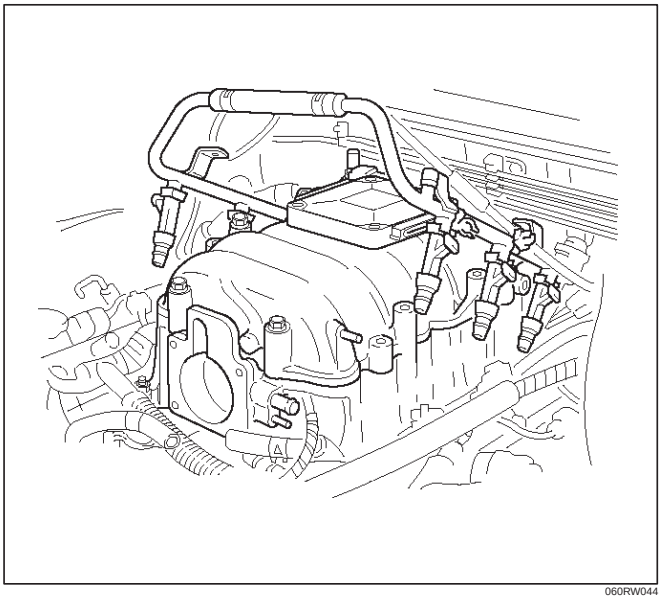

060RW044

7. Install the upper intake manifold. Refer to *Common Chamber in Engine Mechanical.*
8. Install the engine cover.
9. Connect the negative battery cable.

Fuel Pressure Regulator

Removal Procedure

CAUTION: To reduce the risk of fire and personal injury, it is necessary to relieve the fuel system pressure before servicing the fuel system components.

CAUTION: After relieving the system pressure, a small amount of fuel may be released when servicing fuel lines or connections. Reduce the chance of personal injury by covering the fuel line fittings with a shop towel before disconnecting the fittings. The towels will absorb any fuel that may leak out. When the disconnect is completed, place the towel in an approved container.

NOTE: Compressed air must never be used to test or clean a fuel pressure regulator, as damage to the fuel pressure regulator may result.

NOTE: To prevent damage to the fuel pressure regulator, do not immerse the pressure regulator in solvent.

1. Depressurize the fuel system. Refer to *Fuel Pressure Relief Procedure*.
2. Disconnect the negative battery cable.
3. Remove the fuel pump relay. Refer to *Fuel Pump Relay*.
4. Remove the pressure regulator hose from the fuel pressure regulator.
5. Remove the two bolts from the protector that secures the common chamber.

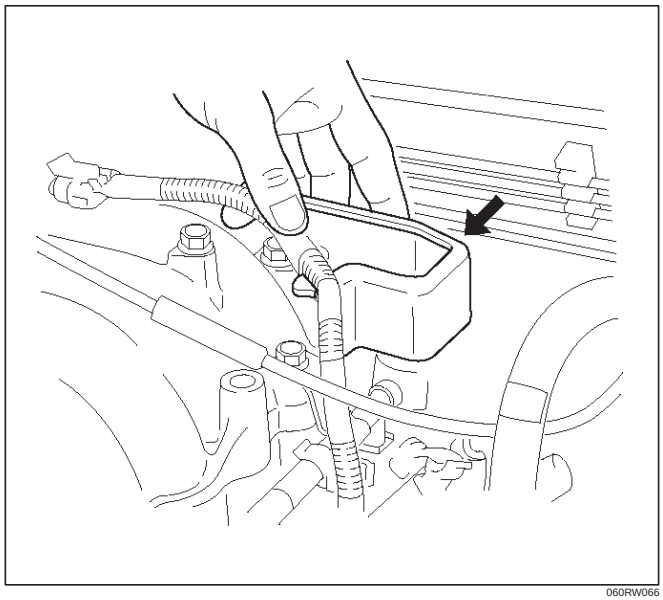

060RW066

6. Remove the fuel pressure regulator attaching screw.

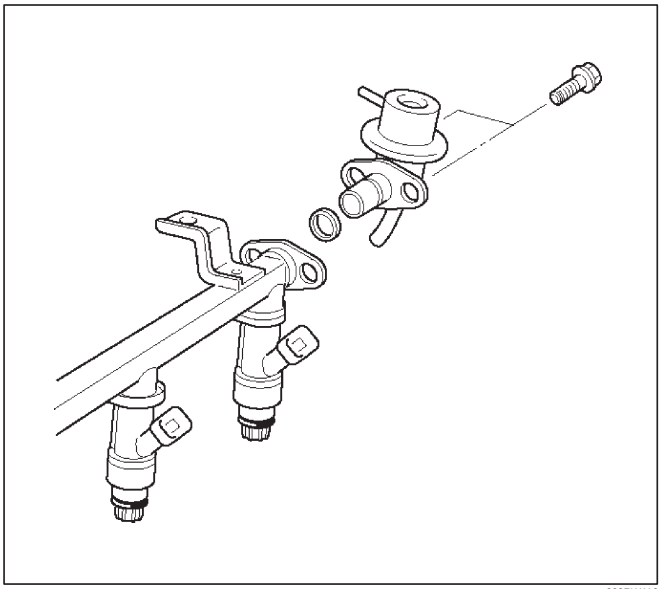

060RW116

7. Remove the fuel pressure regulator from the fuel rail.

Disassembly Procedure

1. Remove the O-ring from the fuel pressure regulator.
2. Loosen the swivel nut.
3. Remove the fuel return line from the fuel pressure regulator.
4. Remove the O-ring from the fuel return line.
   - The O-ring may be left inside the fuel pressure regulator instead of on the fuel return line.

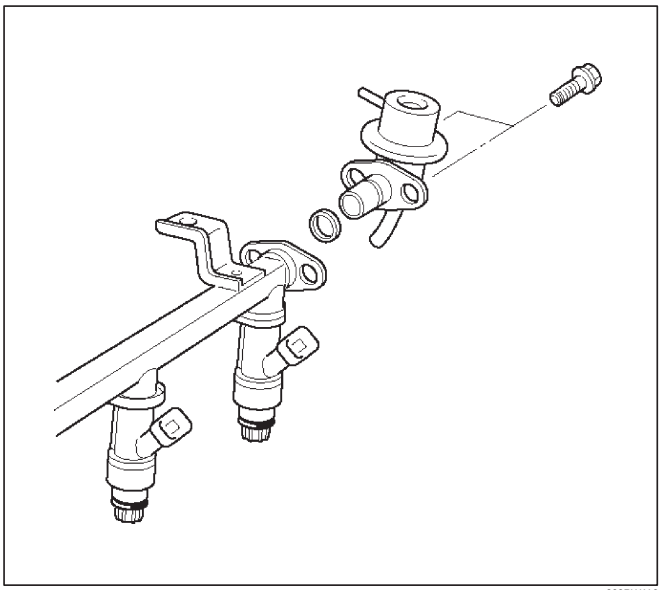

060RW116

Assembly Procedure

1. Install a new O-ring on the fuel return line.
2. Install the fuel return line on the fuel pressure regulator.

NOTE: Do not over-tighten the swivel nut on the fuel pressure regulator. The fuel pressure regulator can be damaged and fuel may leak if the swivel nut is over-tightened.

3. Tighten the swivel nut.
4. Install a new O-ring on the fuel pressure regulator.

Installation Procedure

1. Install the fuel pressure regulator attaching screw.

Tighten

- **Tighten the fuel pressure regulator attaching screw to 3 N·m (0.3 kg·m/26 lb in.).**

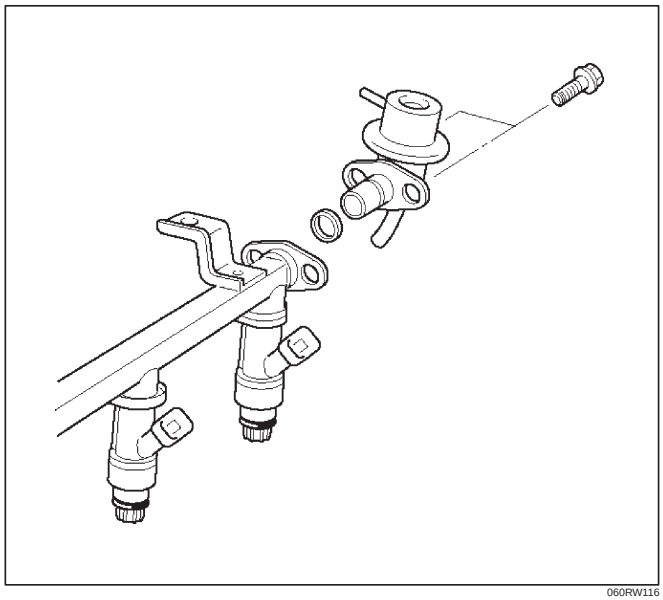

060RW116

2. Install the fuel pressure regulator on the fuel rail.
3. Install the two bolts to the protector that secures the common chamber.

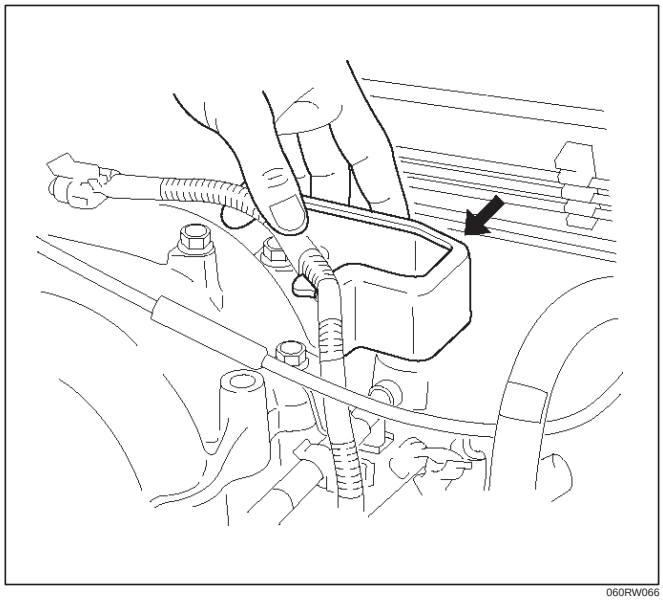

060RW066

4. Install the pressure regulator hose to the fuel pressure regulator.
5. Install the fuel pump relay. Refer to *Fuel Pump Relay*.
6. Connect the negative battery cable.
7. Crank the engine until it starts. Cranking the engine may take longer than usual due to trapped air in the fuel lines.

Fuel Metering System

Fuel Pressure Relief Procedure

CAUTION: To reduce the risk of fire and personal injury, it is necessary to relieve the fuel system pressure before servicing the fuel system components.

CAUTION: After relieving the system pressure, a small amount of fuel may be released when servicing fuel lines or connections. Reduce the chance of personal injury by covering the fuel line fittings with a shop towel before you disconnect the fittings. The towels will absorb any fuel that may leak out. When the disconnect is completed, place the towel in an approved container.

1. Remove the fuel cap.
2. Remove the fuel pump relay from the underhood relay box. Refer to *Fuel Pump Relay*.

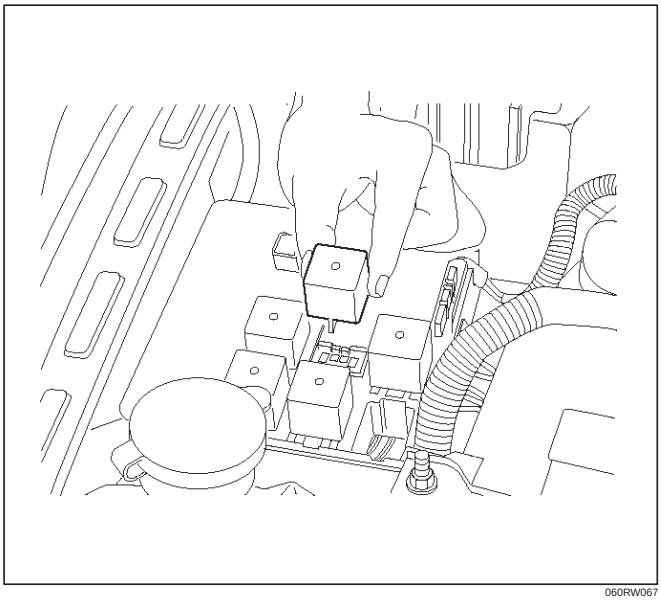

060RW067

3. Start the engine and allow it to stall.
4. Crank the engine for 30 seconds.
5. Disconnect the negative battery cable.

Fuel Pump Assembly

Removal Procedure

Refer to*Fuel Tank In Fuel Pump Relay.*

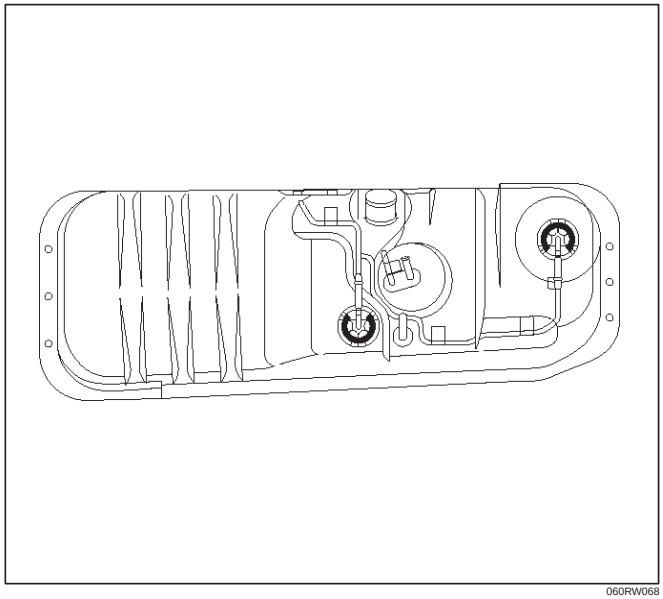

060RW068

Fuel Pump Relay

Removal Procedure

1. Remove the fuse and relay box cover from under the hood.
2. Consult the diagram on the cover to determine which is the correct relay.
3. Pull the relay straight up and out of the fuse and relay box.

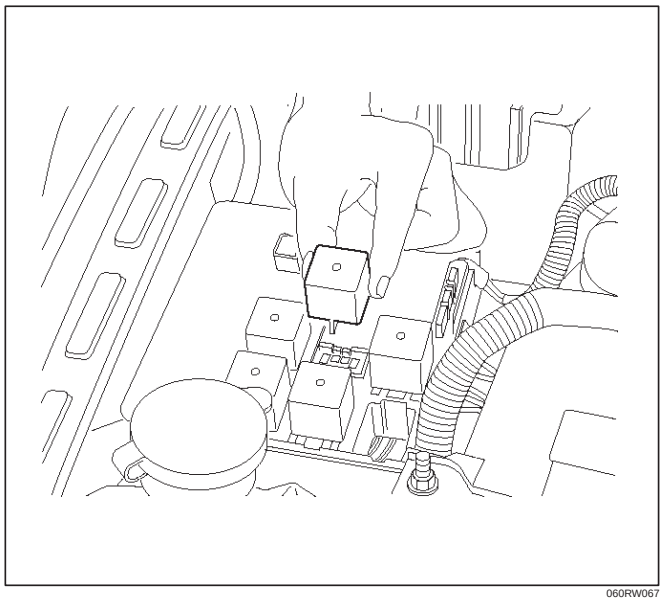

060RW067

Installation Procedure

1. Insert the relay into the correct place in the fuse and relay box with the catch slot facing forward.

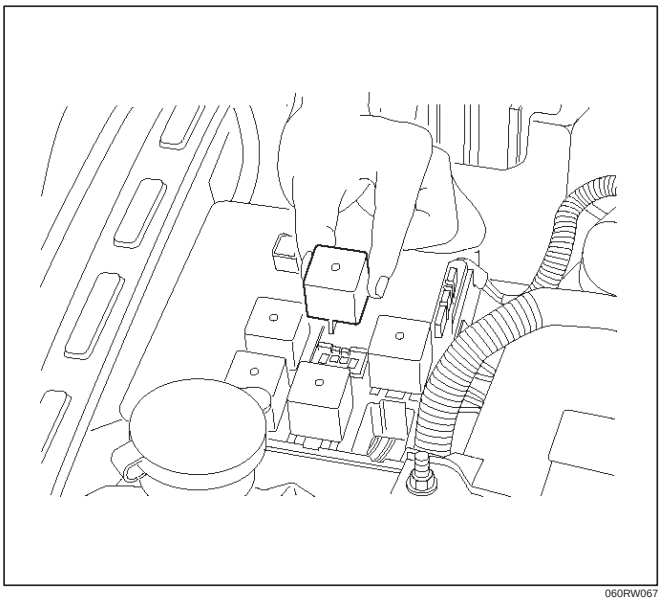

060RW067

2. Press down until the catch engages.
   - An audible “click” will be heard.
3. Install the fuse and relay box cover.

Fuel Rail Assembly

Removal Procedure

NOTE:

- Do not attempt to remove the fuel inlet fitting on the fuel rail. It is staked in place. Removing the fuel inlet fitting will result in damage to the fuel rail or the internal O-ring seal.
- Use care when removing the fuel rail assembly in order to prevent damage to the injector electrical connector terminals and the injector spray tips.
- Fittings should be capped and holes plugged during servicing to prevent dirt and other contaminants from entering open lines and passages.

IMPORTANT: Before removal, the fuel rail assembly may be cleaned with a spray type engine cleaner. Follow the spray package instructions. Do not immerse the fuel rails in liquid cleaning solvent.

1. Depressurize the fuel system. Refer to Fuel Pressure Relief Procedure in this Section.
2. Disconnect the negative battery cable.
3. Remove the engine cover.
4. Disconnect the accelerator pedal cable from throttle body and cable bracket.
5. Disconnect the connectors from, solenoid valve, sensing valve.
6. Disconnect the vacuum hose on canister VSV and positive crankcase ventilation hose.
7. Remove the common chamber Refer to the common chamber in Engine Mechanical.
   1) Lift up carefully on the fuel injectors. Do not separate the fuel injectors from the fuel rail.
   2) If an injector becomes separated from the fuel rail, the infector O-ring seals and the retainer clip must be replaced.
   3) Drain residual fuel into an approved container.

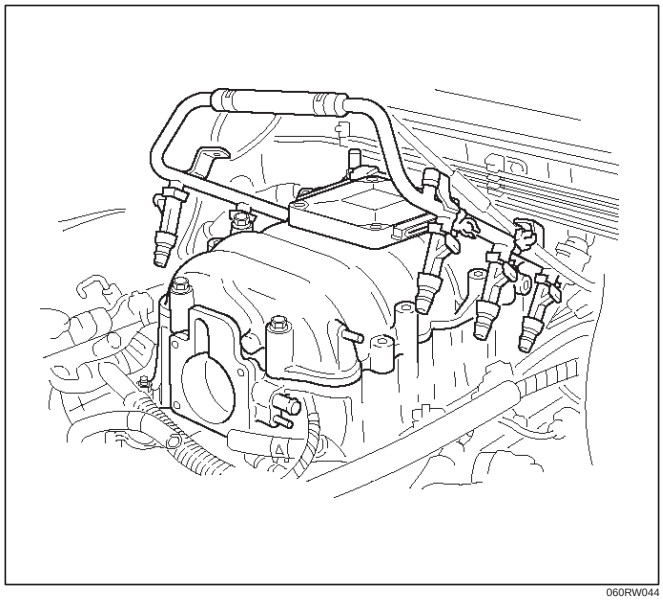

060RW044

8. If removal of the fuel pressure regulator is necessary, refer to *Fuel Pressure Regulator*.
9. If removal of the fuel injectors is necessary, refer to *Fuel Injectors*.

Installation Procedure

1. If the fuel injectors were removed, install them. Refer to *Fuel Injectors*.
2. If the fuel pressure regulator was removed, install it. Refer to *Fuel Pressure Regulator*.
3. Install the common chamber.Refer to common chamber in engine Mechanical.

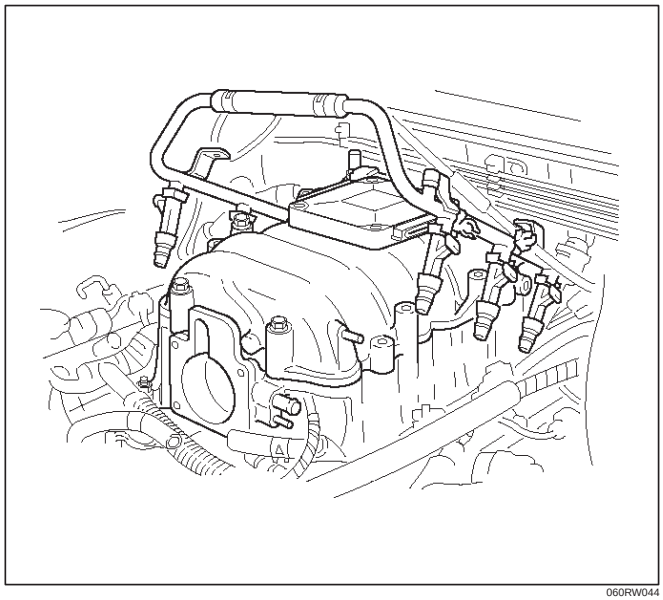

060RW044

4. Connect the vacuum hose on Canister VSV and positive crankcase ventilation hose.
5. Connect the connectors to, solenoid valve.
6. Connect the accelerator pedal cable to throttle body and cable bracket.
7. Install the engine cover.
8. Connect the negative battery cable.
9. Crank the engine until it starts. Cranking the engine may take longer than usual due to trapped air in the fuel rail and in the injectors.

Fuel Tank

Removal Procedure

Refer to*Fuel Tank In Fuel Pump Relay.*

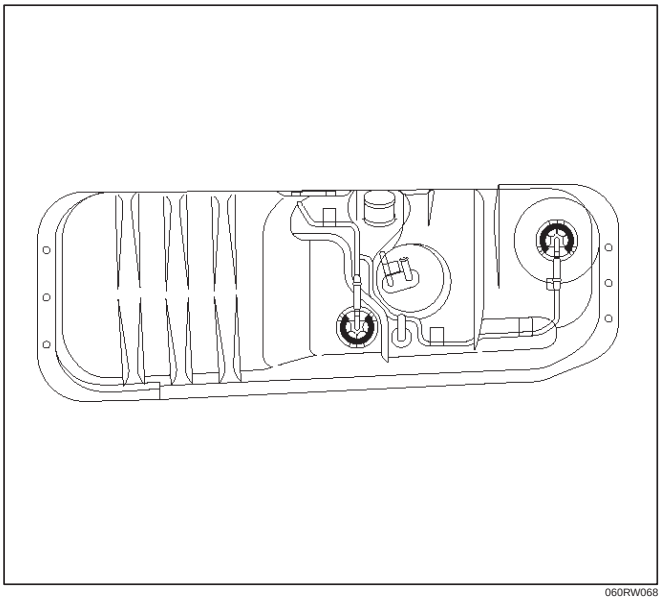

060RW068

Throttle Body (TB)

Removal Procedure

1. Disconnect the negative battery cable.
2. Drain the cooling system. Refer to *Cooling System*.
3. Remove the accelerator cable assembly. Refer to *Accelerator Cable in Engine Speed Control System*..
4. Disconnect the electrical connectors:
   - Throttle position (TP) sensor.
   - Idle air control (IAC) solenoid.
   - Intake air temperature (IAT) sensor. Refer to *Intake Air Temperature Sensor*.
5. Disconnect the vacuum hose below the air horn.
6. Remove the intake air duct clamp.
7. Disconnect the intake air duct.
8. Disconnect the coolant lines from the throttle body.
9. Remove the bolts from the common chamber.
10. Remove the throttle body from the common chamber.
11. Remove the gasket from the upper intake manifold.

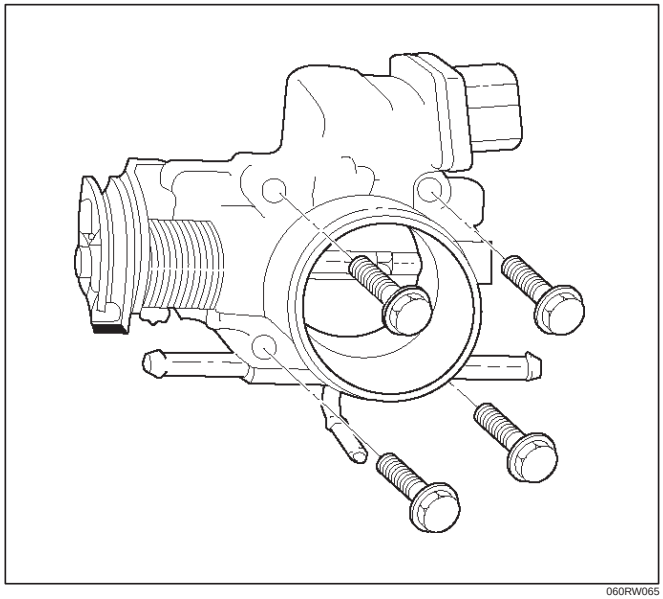

060RW065

12. Remove the IAC. Refer to *Idle Air Control (IAC) Solenoid*.
13. Remove the TP sensor. Refer to *Throttle Position (TP) Sensor*.

Inspection Procedure

NOTE: Do not use solvent of any type when you clean the gasket surfaces on the intake manifold and the throttle body assembly. The gasket surfaces and the throttle body assembly may be damaged as a result.

- If the throttle body gasket needs to be replaced, remove any gasket material that may be stuck to the mating surfaces of the manifold.
- Do not leave any scratches in the aluminum casting.

Installation Procedure

1. Install the TP sensor. Refer to *Throttle Position (TP) Sensor*.
2. Install the IAC. Refer to *Idle Air Control (IAC) Solenoid*.
3. Install the gasket on the common chamber.
4. Install the throttle body on the common chamber.
5. Secure the gasket and the throttle body with the four bolts.
   - The vacuum lines must be properly routed under the throttle body before tightening the mounting bolts.

Tighten

- **Tighten the throttle body mounting bolts to 24 N·m (2.4 kg·m/17 lb ft.).**

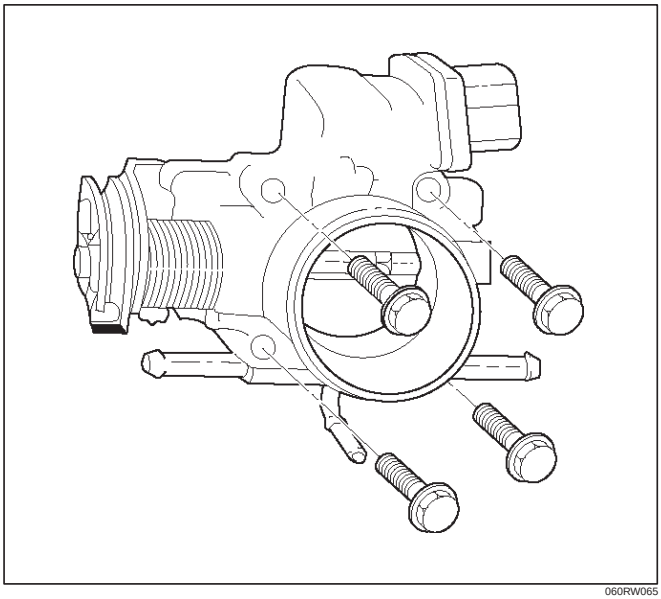

060RW065

6. Install the coolant lines.
7. Connect all the vacuum lines.
8. Install the intake air duct.
9. Tighten the intake air duct clamp.
10. Connect all the electrical connectors:
    - Throttle position (TP) sensor.
    - Idle air control (IAC) solenoid.
    - Intake air temperature (IAT) sensor. Refer to *Intake Air Temperature Sensor*.
11. Install the accelerator cable assembly. Refer to *Accelerator Cable in Engine Speed Control System*..
12. Fill the cooling system. Refer to *Cooling System*.
13. Install the negative battery cable.

Electronic Ignition System

Removal Procedure

1. Disconnect the negative battery cable.
2. Disconnect the electrical connector at the coil module.
3. Remove the two screws that secure the coil module to the rocker cover.

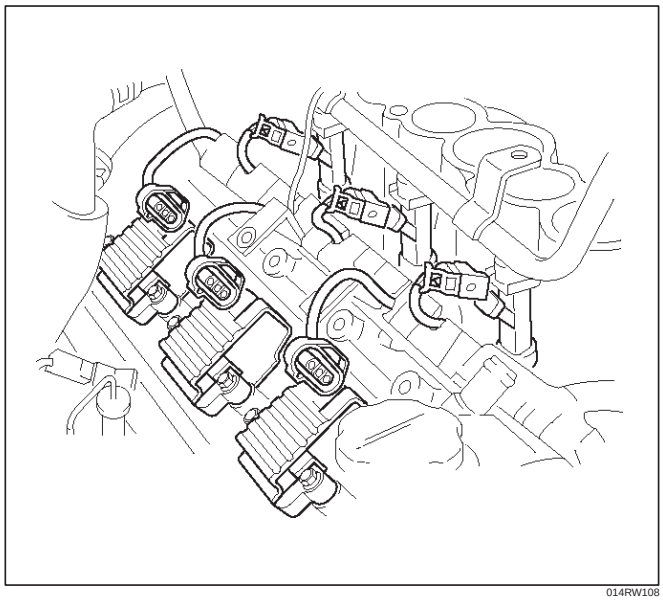

014RW108

4. Remove the coil module and the spark plug boot from the spark plug.
    - Twist the coil module while pulling it straight up.

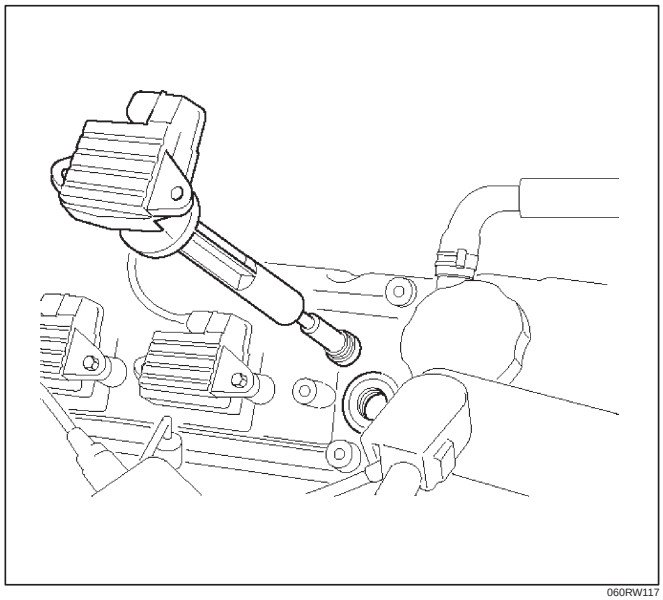

060RW117

5. Use the spark plug socket in order to remove the spark plug from the engine.

Spark Plug Gap Check

- Check the gap of all spark plugs before installation.
- Use a round wire feeler gauge to ensure an accurate check.
- Plugs installed with the wrong gap can cause poor engine performance and excessive emissions.

Installation Procedure

NOTE: The plug must thread smoothly into the cylinder head and be fully seated. Use a thread chaser if necessary to clean the threads in the cylinder head. Cross-threading or failure to fully seat the spark plug can cause plug overheating, exhaust blow-by gases, or thread damage. Do not overtighten the spark plugs. Over tightening can cause aluminum threads to strip.

1. Install the spark plug in the engine. Use the appropriate spark plug socket.

Tighten

- **Tighten the spark plug to 18 N·m (1.8 kg·m/13 lb ft.).**

2. Install the coil module and spark plug boot over the spark plug.
3. Secure the coil module to the rocker cover with two screws.

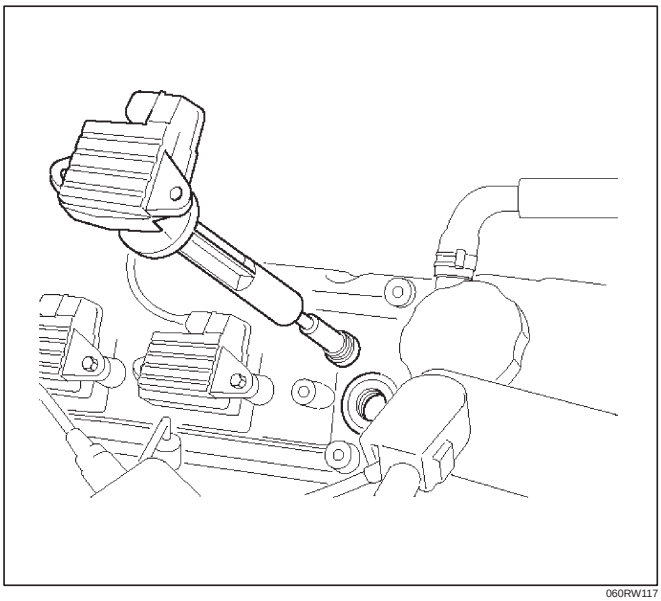

060RW117

4. Connect the electrical connector at the coil module.
5. Connect the negative battery cable.

Catalytic Converter

Removal and Installation Procedure

Refer to *Engine Exhaust in Engine*.

Air Conditioning Relay

Removal Procedure

1. Remove the fuse and relay box cover from under the hood.
2. Consult the diagram on the cover to determine which is the correct relay.
3. Pull the relay straight up and out of the fuse and relay box.

Installation Procedure

1. Insert the relay into the correct place in the fuse and relay box with the catch slot facing forward.
2. Press down until the catch engages.
   - An audible “click” will be heard.
3. Install the fuse and relay box cover.

EVAP Canister Hoses

Service Information

To view the routing of the EVAP canister hoses, refer to *Vehicle Emission Control Information* in *Diagnosis*. Use 6148M or equivalent when you replace the EVAP canister hoses.

EVAP Canister

Removal Procedure

1. Disconnect the negative battery cable.
2. Disconnect the hose from the EVAP canister.

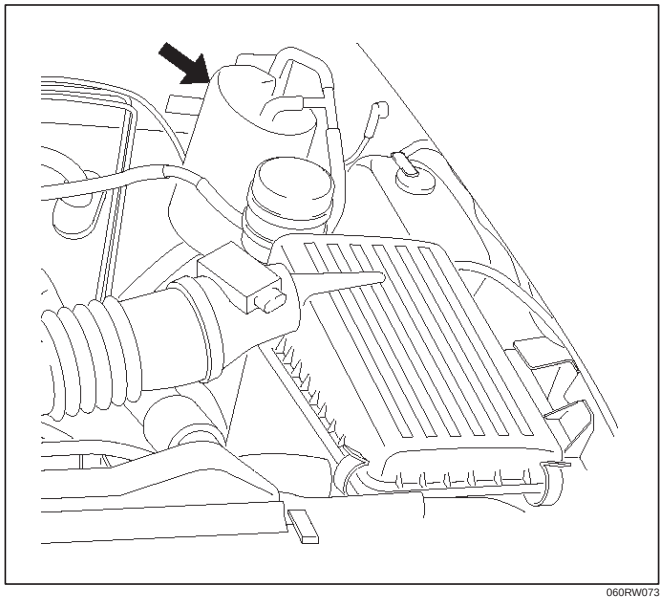

060RW073

3. Remove the EVAP canister to the mounting bracket.

Inspection Procedure

1. Inspect the hoses for cracks and leaks.
2. Inspect the canister for a damaged case.

Installation Procedure

1. Slide the canister into mounting bracket the install the mounting bracket bolt.

2. Install the EVAP canister to the mounting bracket.

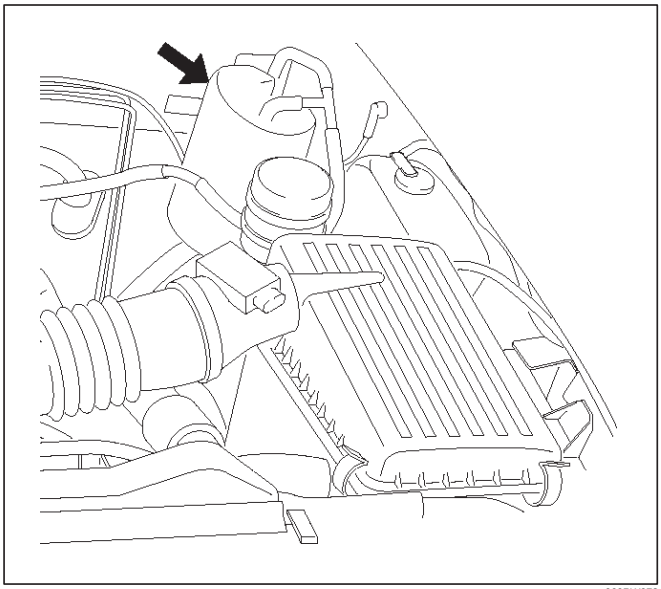

060RW073

3. Connect the two hoses to the EVAP canister.
4. Disconnect the negative battery cable.

EVAP Canister Purge Solenoid

Removal Procedure

1. Disconnect the electrical connector from the EVAP canister purge solenoid.
2. Disconnect the vacuum hoses from the EVAP canister purge solenoid.

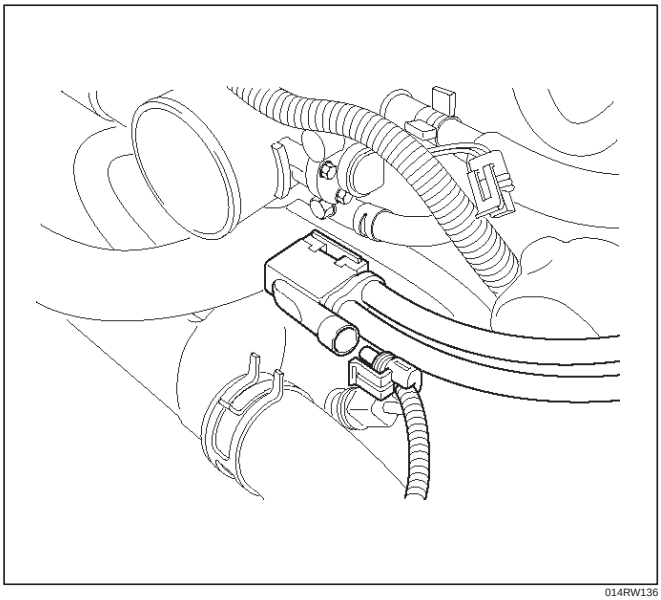

014RW136

3. Remove the EVAP canister purge solenoid retaining bolt from the upper intake manifold.
4. Remove the EVAP canister purge solenoid.

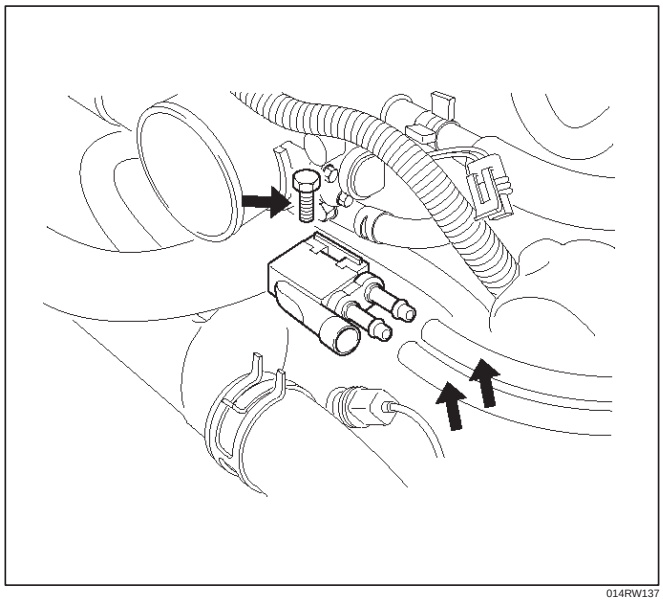

014RW137

Installation Procedure

1. Install the EVAP canister purge solenoid on the upper intake manifold.
2. Install the EVAP canister purge solenoid retaining bolt.
3. Connect the vacuum hoses to the EVAP canister purge solenoid.

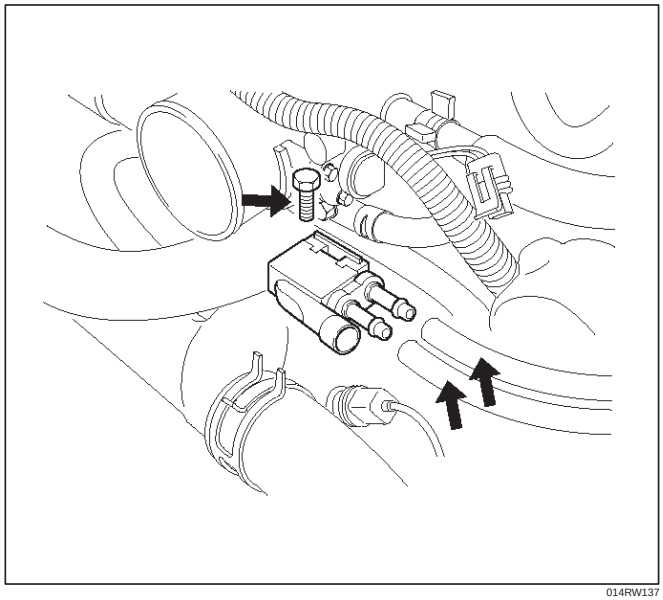

014RW137

4. Connect the electrical connector to the EVAP canister purge solenoid.

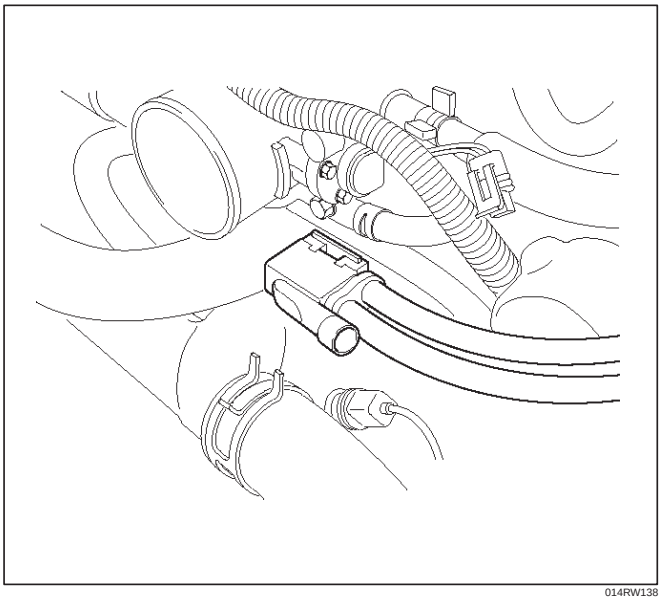

014RW138

Fuel Tank Vent Valve

Removal and Installation Procedure

Refer to *Fuel Pump*

Positive Crankcase Ventilation (PCV) Valve

Removal Procedure

1. Remove the vacuum hose at the PCV valve.
   - Slide the clamp back to release the hose.
2. Pull the PCV valve from the rubber grommet in the right valve cover.

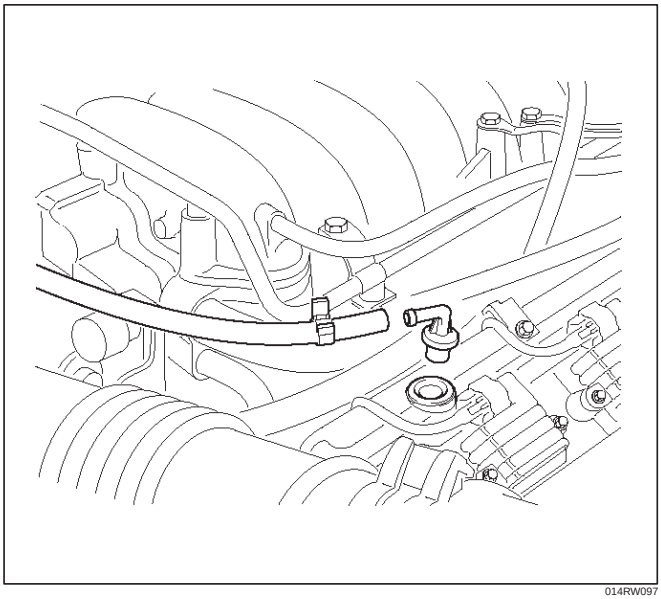

014RW097

Inspection Procedure

1. Shake the valve and listen for the rattle of the needle inside the valve.
2. If the valve does not rattle, replace the valve.

Installation Procedure

1. Push the PCV valve into the rubber grommet in the left valve cover.
2. Install the vacuum hose on the PCV valve and secure the vacuum hose with the clamp.

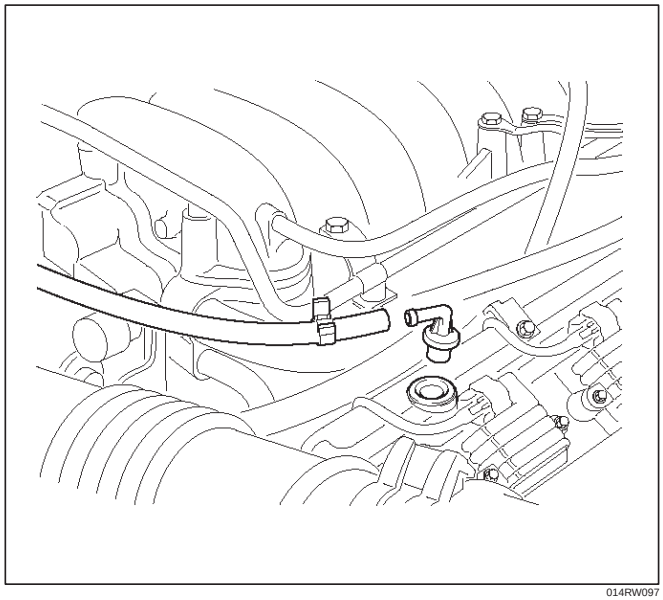

014RW097

Wiring and Connectors

Wiring Harness Service

The control module harness electrically connects the control module to the various solenoids, switches and sensors in the vehicle engine compartment and passenger compartment.

Replace wire harnesses with the proper part number replacement.

Because of the low amperage and voltage levels utilized in powertrain control systems, it is essential that all wiring in environmentally exposed areas be repaired with crimp and seal splice sleeves.

The following wire harness repair information is intended as a general guideline only. Refer to *Chassis Electrical* for all wire harness repair procedures.

Connectors and Terminals

Use care when probing a connector and when replacing terminals. It is possible to short between opposite terminals. Damage to components could result. Always use jumper wires between connectors for circuit checking. NEVER probe through Weather-Pack seals. Use an appropriate connector test adapter kit which contains an assortment of flexible connectors used to probe terminals during diagnosis. Use an appropriate fuse remover and test tool for removing a fuse and to adapt the fuse holder to a meter for diagnosis.

Open circuits are often difficult to locate by sight because oxidation or terminal misalignment are hidden by the connectors. Merely wiggling a connector on a sensor, or in the wiring harness, may temporarily correct the open circuit. Intermittent problems may also be caused by oxidized or loose connections.

Be certain of the type of connector/terminal before making any connector or terminal repair. Weather-Pack and Com-Pack III terminals look similar, but are serviced differently.

Wire Harness Repair: Twisted Shielded Cable

Removal Procedure

1. Remove the outer jacket.
2. Unwrap the aluminum/mylar tape. Do not remove the mylar.

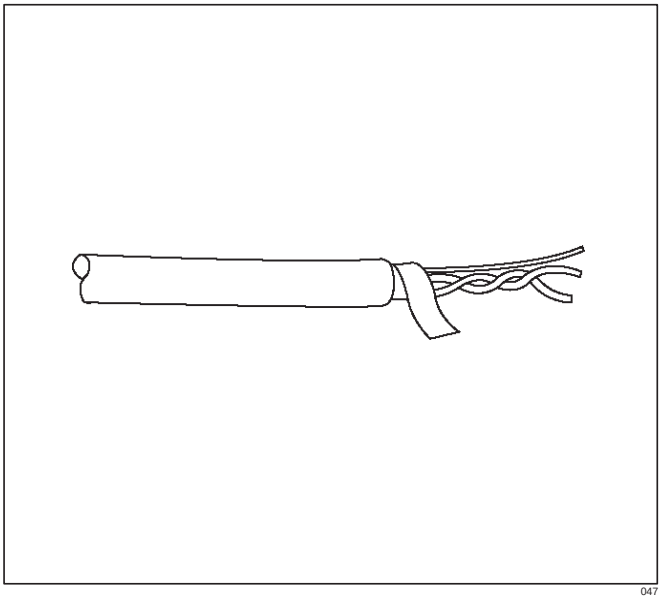

047

3. Untwist the conductors.
4. Strip the insulation as necessary.

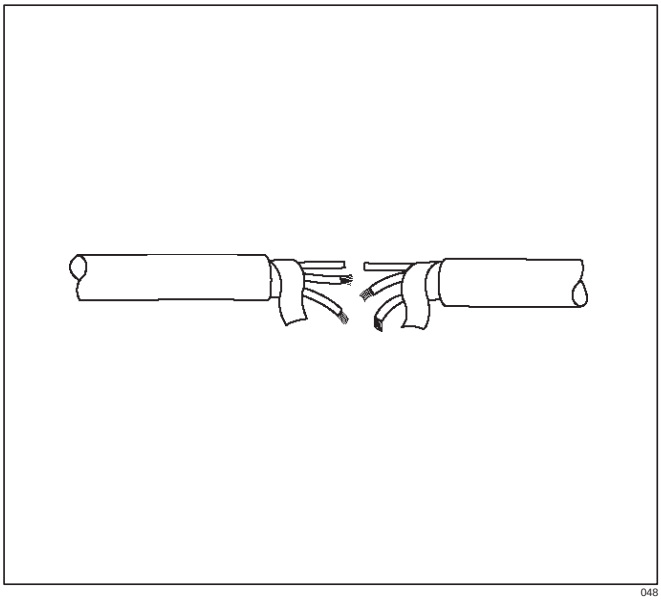

048

Installation Procedure

1. Splice the wires using splice clips and rosin core solder.
2. Wrap each splice to insulate.
3. Wrap the splice with mylar and with the drain (uninsulated) wire.

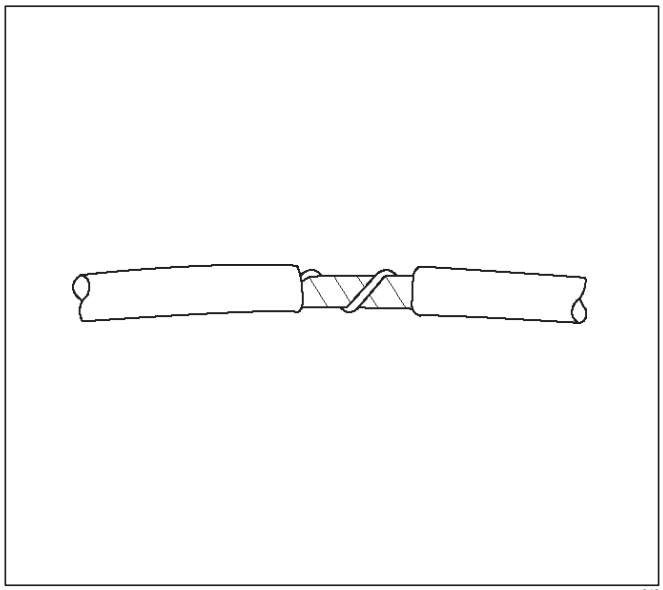

049

4. Tape over the whole bundle to secure.

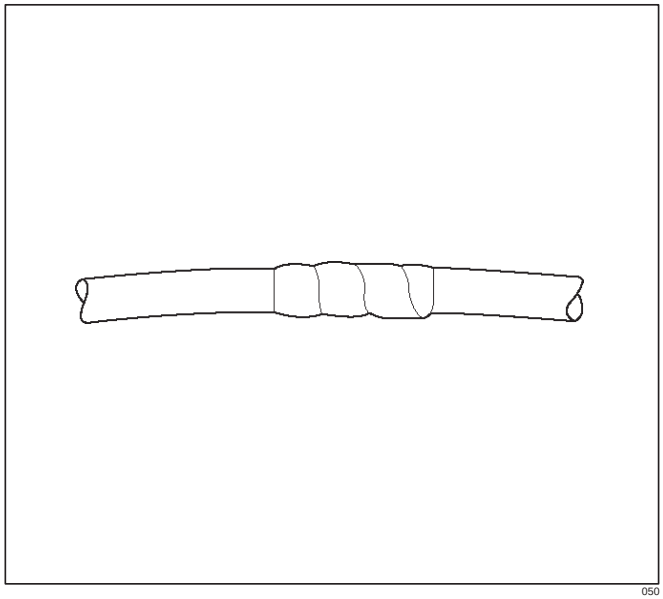

050

Twisted Leads

Removal Procedure

1. Locate the damaged wire.

2. Remove the insulation as required.

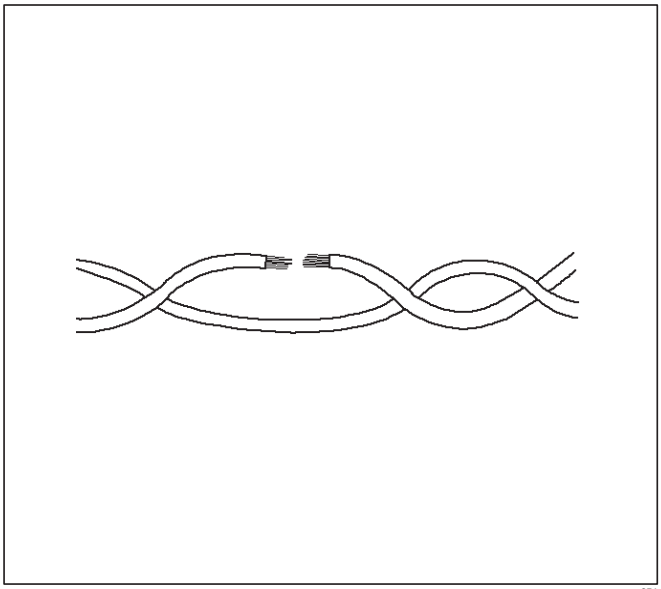

051

Installation Procedure

1. Use splice clips and rosin core solder in order to splice the two wires together.

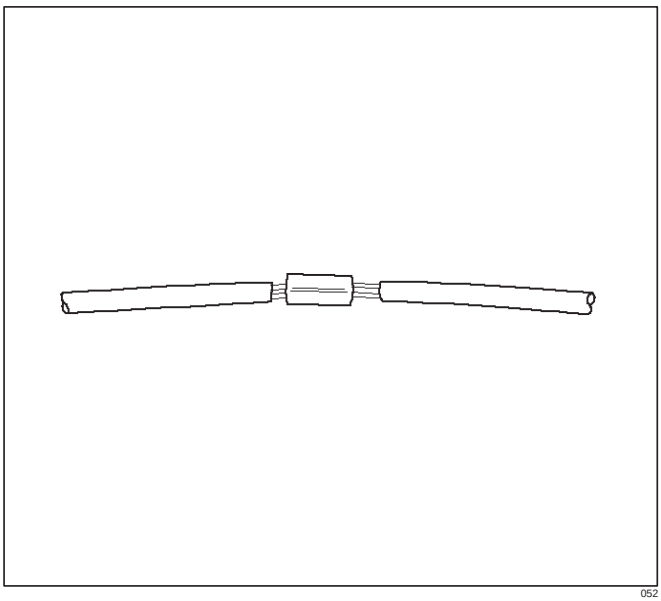

052

2. Cover the splice with tape in order to insulate it from the other wires.

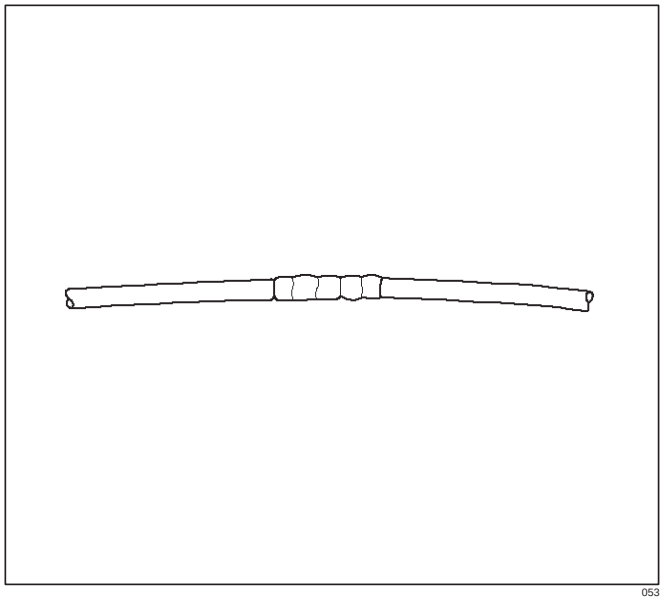

053

3. Twist the wires as they were before starting this procedure.

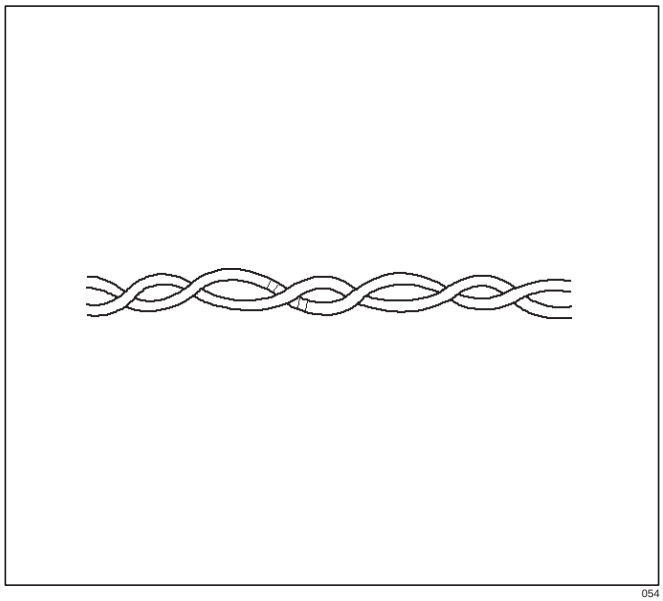

054

4. Tape the wires with electrical tape. Hold in place.

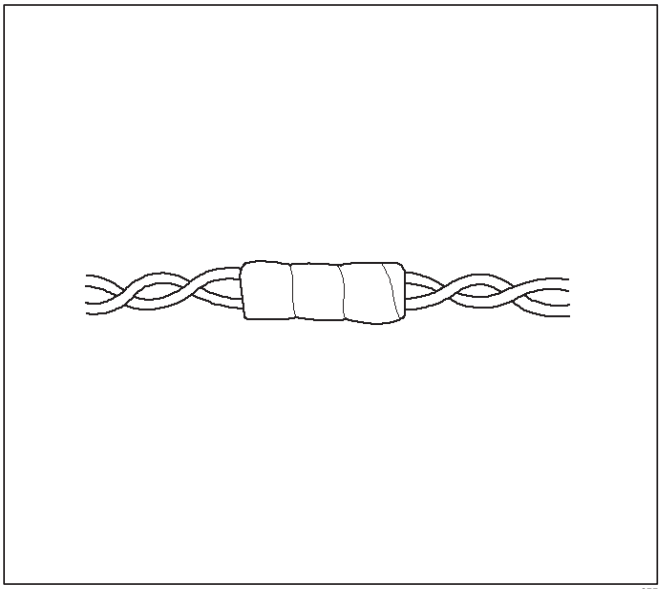

055

Weather-Pack Connector

Tools Required

5-8840-0388-0 Weather-Pack II Terminal Remover

Removal Procedure

A Weather-Pack connector can be identified by a rubber seal at the rear of the connector. This engine room connector protects against moisture and dirt, which could from oxidation and deposits on the terminals. This protection is important, because of the low voltage and the low amperage found in the electronic systems.

1. Open the secondary lock hinge on the connector.

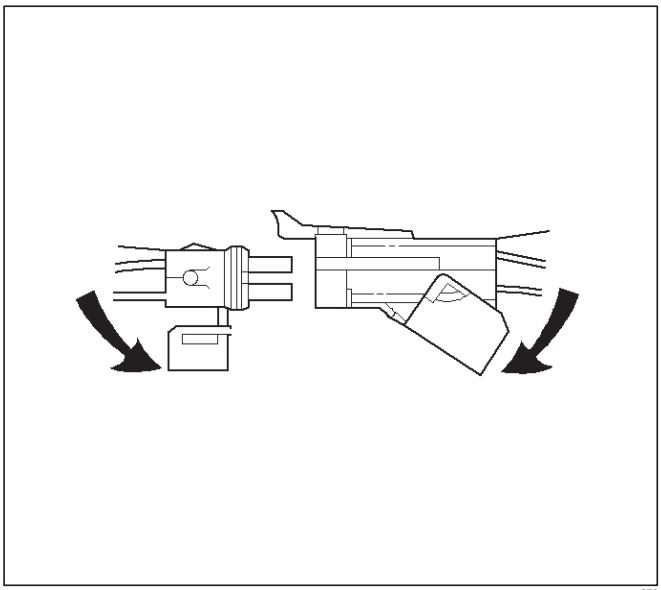

070

2. Use tool 5-8840-0388-0 or the equivalent to remove the pin and the sleeve terminals. Push on 5-8840-0388-0 to release.

NOTE: Do the use an ordinary pick or the terminal may be bent or deformed. Unlike standard blade terminals, these terminals cannot be straightened after they have been improperly bent.

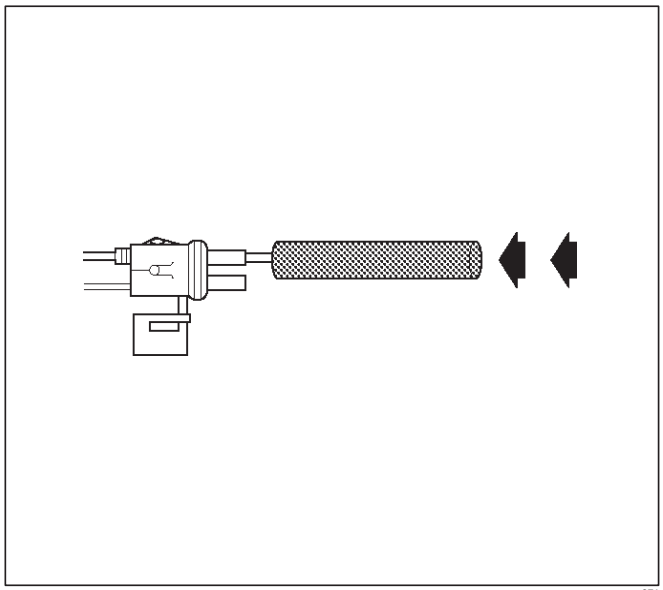

071

3. Cut the wire immediately behind the cable seal.

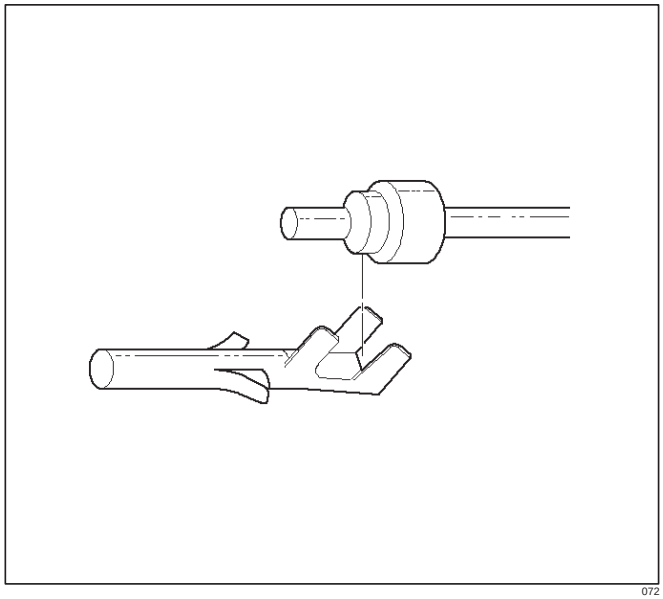

072

Installation Procedure

Make certain the connectors are properly seated and all of the sealing rings are in place when you reconnect the leads. The secondary lock hinge provides a backup locking feature for the connector. The secondary lock hinge is used for added reliability. This flap should retain the terminals even if the small terminal lock tangs are not positioned properly.

Do not replace the Weather-Pack connections with standard connections. Read the instructions provided with the Weather-Pack connector and terminal packages.

1. Replace the terminal.
2. Slip the new seal onto the wire.
3. Strip 5 mm (0.2”) of insulation from the wire.
4. Crimp the terminal over the wire and the seal.

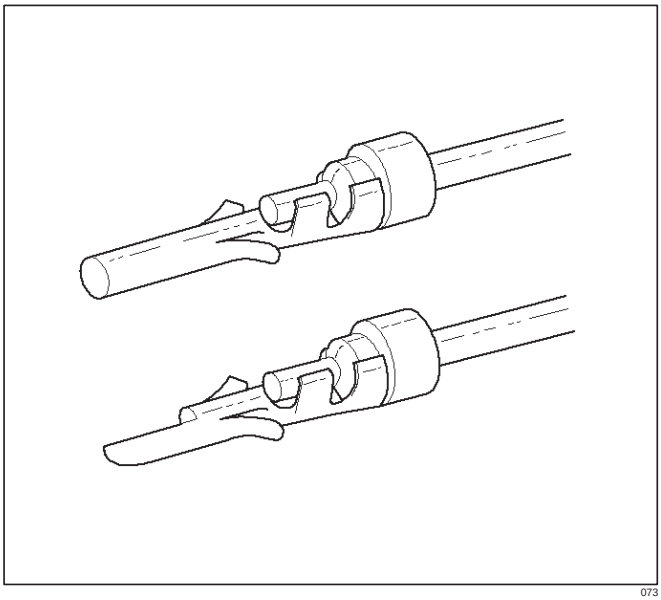

073

5. Push the terminal and the connector to engage the locking tangs.

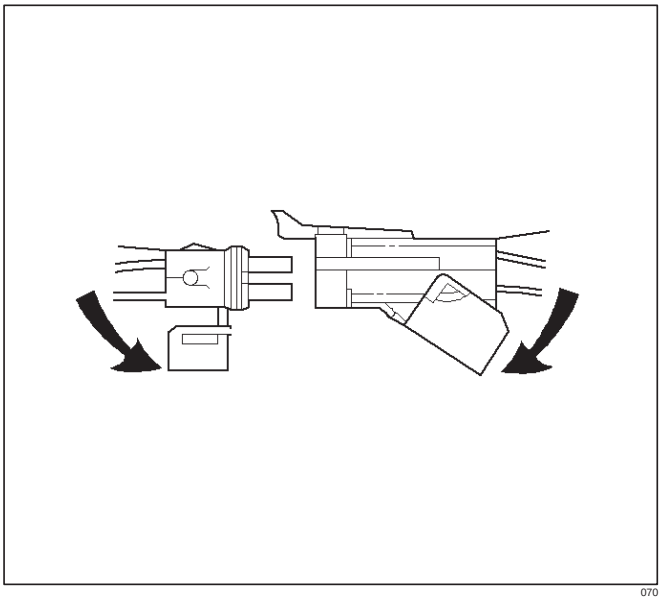

070

6. Close the secondary locking hinge.

Com-Pack III

General Information

The Com-Pack III terminal looks similar to some Weather-Pack terminals. This terminal is not sealed and is used where resistance to the environment is not required. Use the standard method when repairing a terminal. Do not use the Weather-Pack terminal tool 5-8840-0388-0 or equivalent. These will damage the terminals.

Metri-Pack

Tools Required

5-8840-0632-0 Terminal Remover

Removal Procedure

Some connectors use terminals called Metri-Pack Series 150. These may be used at the engine coolant temperature (ECT) sensor.

1. Slide the seal (1) back on the wire.
2. Insert the 5-8840-0632-0 tool or equivalent (3) in order to release the terminal locking tang (2).

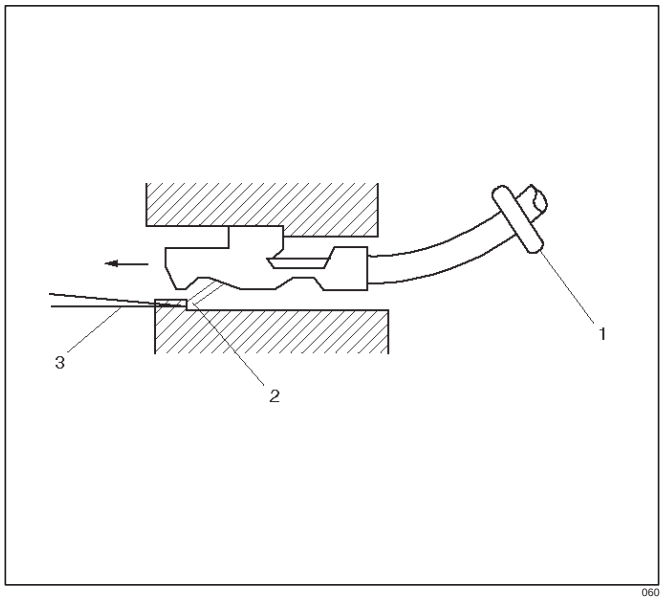

060

3. Push the wire and the terminal out through the connector. If you reuse the terminal, reshape the locking tang.

Installation Procedure

Metri-Pack terminals are also referred to as “pull-to-seat” terminals.

1. In order to install a terminal on a wire, the wire must be inserted through the seal (2) and through the connector (3).
2. The terminal (1) is then crimped onto the wire.

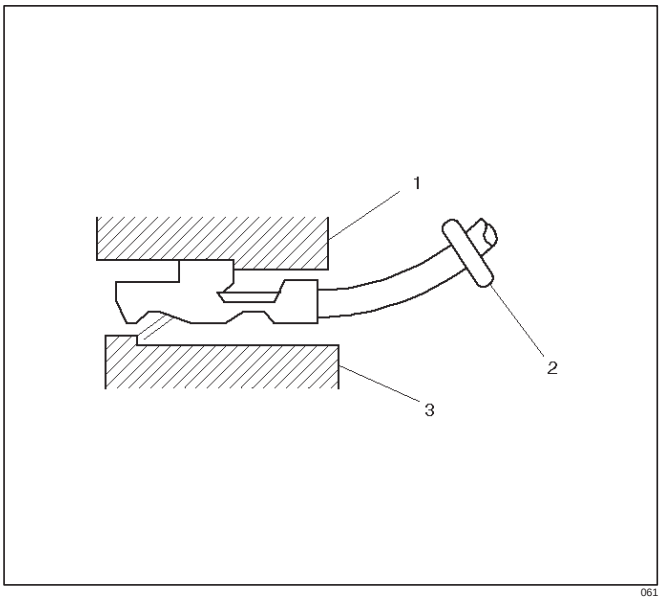

3. Then the terminal is pulled back into the connector to seat it in place.

General Description (ECM and Sensors)

Reference ECM Input

The engine control module (ECM) uses this signal from the crankshaft position (CKP) sensor to calculate engine RPM and crankshaft position at all engine speeds. The ECM also uses the pulses on this circuit to initiate injector pulses. If the ECM receives no pulses on this circuit, DTC P0337 will set. The engine will not start and run without using the reference signal.

A/C Request Signal

This signal tells the ECM when the A/C mode is selected at the A/C control head. The ECM uses this to adjust the idle speed before turning “ON” the A/C clutch. The A/C compressor will be inoperative if this signal is not available to the ECM.
Refer to *A/C Clutch Circuit Diagnosis* for A/C wiring diagrams and diagnosis for the A/C electrical system.

Crankshaft Position (CKP) Sensor

The crankshaft position (CKP) sensor provides a signal used by the engine control module (ECM) to calculate the ignition sequence. The CKP sensor initiates the 58X reference pulses which the ECM uses to calculate RPM and crankshaft position.
Refer to *Electronic Ignition System* for additional information.

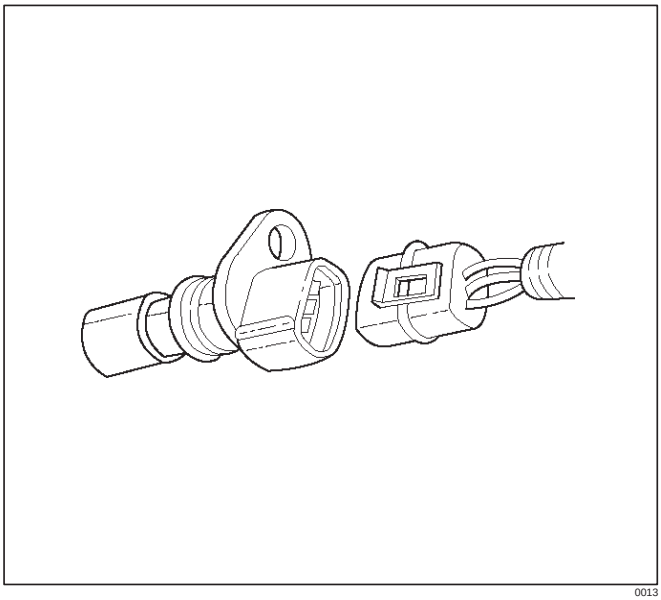

0013

Camshaft Position (CMP) Sensor and Signal

The camshaft position (CMP) sensor sends a CMP signal to the ECM. The ECM uses this signal as a “syncpulse” to trigger the injectors in the proper sequence. The ECM uses the CMP signal to indicate the position of the #1 piston during its power stroke. This allows the ECM to calculate true sequential fuel injection (SFI) mode of operation. If the ECM detects an incorrect CMP signal while the engine is running, DTC P0341 will set. If the CMP signal is lost while the engine is running, the fuel injection system will shift to a calculated sequential fuel injection mode based on the last fuel injection pulse, and the engine will continue to run. As long as the fault is present, the engine can be restarted. It will run in the calculated sequential mode with a 1-in-6 chance of the injector sequence being correct.
Refer to *DTC P0341* for further information.

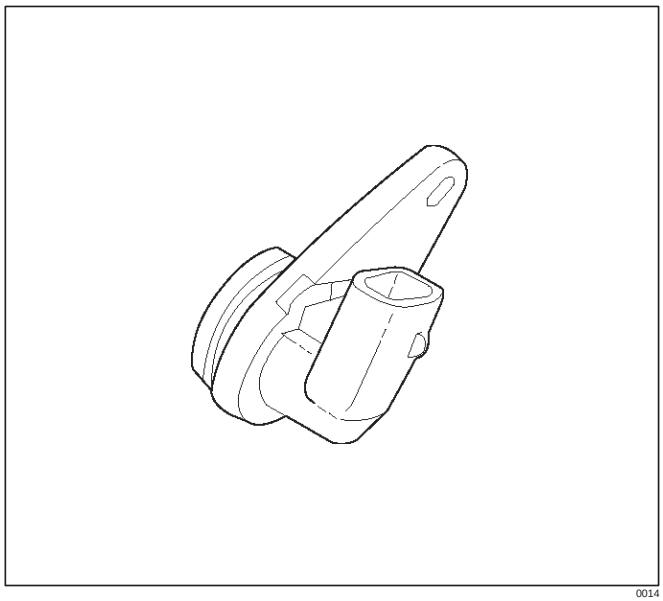

0014

Engine Coolant Temperature (ECT) Sensor

The engine coolant temperature (ECT) sensor is a thermistor (a resistor which changes value based on temperature) mounted in the engine coolant stream. Low coolant temperature produces a high resistance of 100,000 ohms at –40˚C (–40˚F). High temperature causes a low resistance of 70 ohms at 130˚C (266˚F). The ECM supplies a 5-volt signal to the ECT sensor through resistors in the ECM and measures the voltage. The signal voltage will be high when the engine is cold and low when the engine is hot. By measuring the voltage, the ECM calculates the engine coolant temperature. Engine coolant temperature affects most of the systems that the ECM controls.
The Tech 2 displays engine coolant temperature in degrees. After engine start-up, the temperature should rise steadily to about 85˚C (185˚F). It then stabilizes when the thermostat opens. If the engine has not been run for several hours (overnight), the engine coolant temperature and intake air temperature displays should be close to each other. A hard fault in the engine coolant sensor circuit will set DTC P0118.

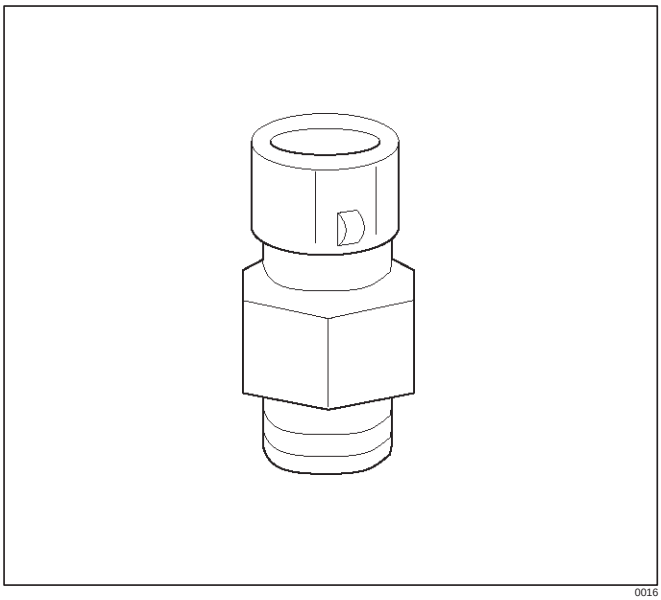

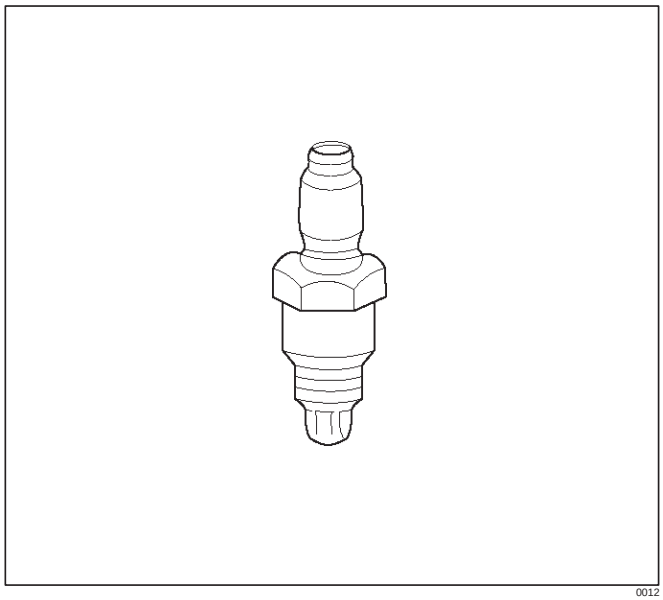

Electrically Erasable Programmable Read Only Memory (EEPROM)

The electrically erasable programmable read only memory (EEPROM) is a permanent memory chip that is physically soldered within the ECM. The EEPROM contains the program and the calibration information that the ECM needs to control powertrain operation.

Unlike the PROM used in past applications, the EEPROM is not replaceable. If the ECM is replaced, the new ECM will need to be programmed. Equipment containing the correct program and calibration for the vehicle is required to program the ECM.

Fuel Control Heated Oxygen Sensors

The fuel control heated oxygen sensor is mounted in the exhaust stream where they can monitor the oxygen content of the exhaust gas. The oxygen present in the exhaust gas reacts with the sensor to produce a voltage output. This voltage should constantly fluctuate from approximately 100 mV to 900 mV. The heated oxygen sensor voltage can be monitored with a Tech 2. By monitoring the voltage output of the oxygen sensor, the ECM calculates the pulse width command for the injectors to produce the proper combustion chamber mixture.

- Low HO2S voltage is a lean mixture which will result in a rich command to compensate.
- High HO2S voltage is a rich mixture which will result in a lean command to compensate.

Intake Air Temperature (IAT) Sensor

The intake air temperature (IAT) sensor is a thermistor which changes its resistance based on the temperature of air entering the engine. Low temperature produces a high resistance of 100,000 ohms at –40˚C (–40˚F). High temperature causes low resistance of 70 ohms at 130˚C (266˚F) . The ECM supplies a 5-volt signal to the sensor through a resistor in the ECM and monitors the signal voltage. The voltage will be high when the incoming air is cold. The voltage will be low when the incoming air is hot. By measuring the voltage, the ECM calculates the incoming air temperature. The IAT sensor signal is used to adjust spark timing according to the incoming air density.

The Tech 2 displays the temperature of the air entering the engine. The temperature should read close to the ambient air temperature when the engine is cold and rise as underhood temperature increases. If the engine has not been run for several hours (overnight), the IAT sensor temperature and engine coolant temperature should read close to each other. A fault in the IAT sensor circuit will set DTC P0112 or DTC P0113.

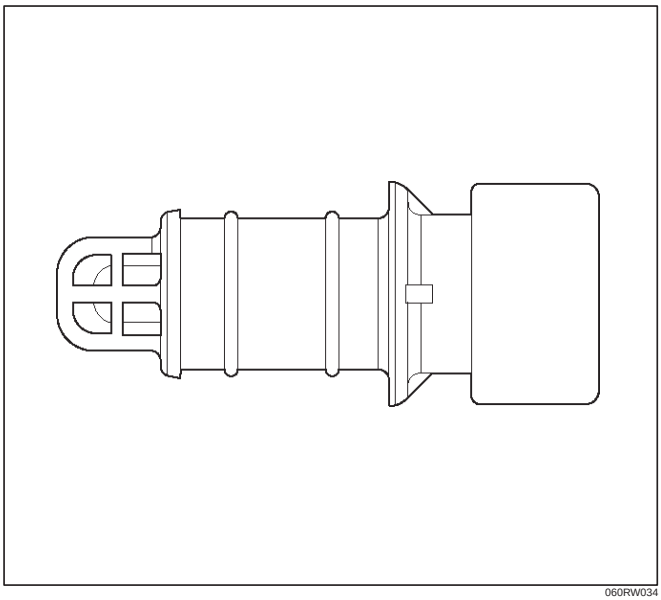

060RW034

Mass Air Flow (MAF) Sensor

The mass air flow (MAF) sensor measures the difference between the volume and the quantity of air that enters the engine. “Volume” means the size of the space to be filled. “Quantity” means the number of air molecules that will fit into the space. This information is important to the ECM because heavier, denser air will hold more fuel than lighter, thinner air. The ECM adjusts the air/fuel ratio as needed depending on the MAF value. The Tech 2 reads the MAF value and displays it in terms of grams per second (gm/s). At idle, the Tech 2 should read between 4-7 gm/s on a fully warmed up engine. Values should change quickly on acceleration. Values should remain stable at any given RPM. A failure in the MAF sensor or circuit will set DTC P0101, DTC P0102, or DTC P0103.

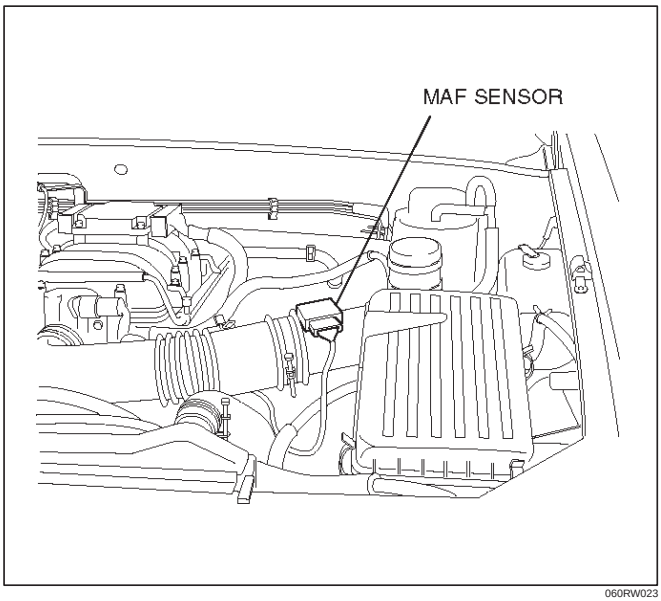

060RW023

Barometric Pressure (BARO) Sensor

The barometric pressure (BARO) sensor responds to changes in intake manifold pressure (vacuum).

- Barometric pressure (BARO).

If the ECM detects a voltage that is lower than the possible range of the BARO sensor, DTC P0107 will be set. A signal voltage higher than the possible range of the sensor will set DTC P0108. The ECM can detect a shifted BARO sensor. The ECM compares the BARO sensor signal to a calculated BARO based on throttle position and various engine load factors.

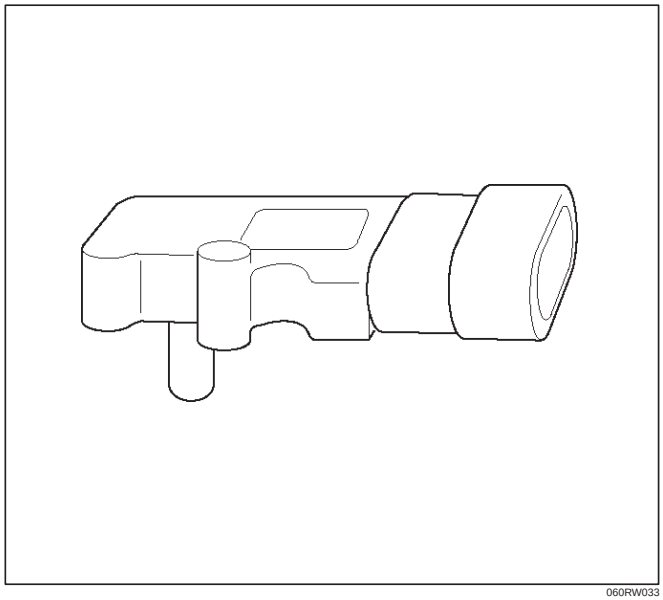

060RW033

Engine Control Module (ECM)

The engine control module (ECM) is located on the common chamber. The ECM controls the following:

- Fuel metering system.
- Ignition timing.
- On-board diagnostics for powertrain functions.

The ECM constantly observes the information from various sensors. The ECM controls the systems that affect vehicle performance. The ECM performs the diagnostic function of the system. It can recognize operational problems, alert the driver through the MIL (Service Engine Soon lamp), and store diagnostic trouble codes (DTCs). DTCs identify the problem areas to aid the technician in making repairs.

ECM Function

The ECM supplies either 5 or 12 volts to power various sensors or switches. The power is supplied through resistances in the ECM which are so high in value that a test light will not light when connected to the circuit. In some cases, even an ordinary shop voltmeter will not give an accurate reading because its resistance is too low. Therefore, a digital voltmeter with at least 10 megohms input impedance is required to ensure accurate voltage readings. Tool J 39200 meets this requirement. The ECM controls output circuits such as the injectors, IAC, cooling fan relays, etc., by controlling the ground or the power

feed circuit through transistors or through either of the following:

- Output Driver Module (ODM)

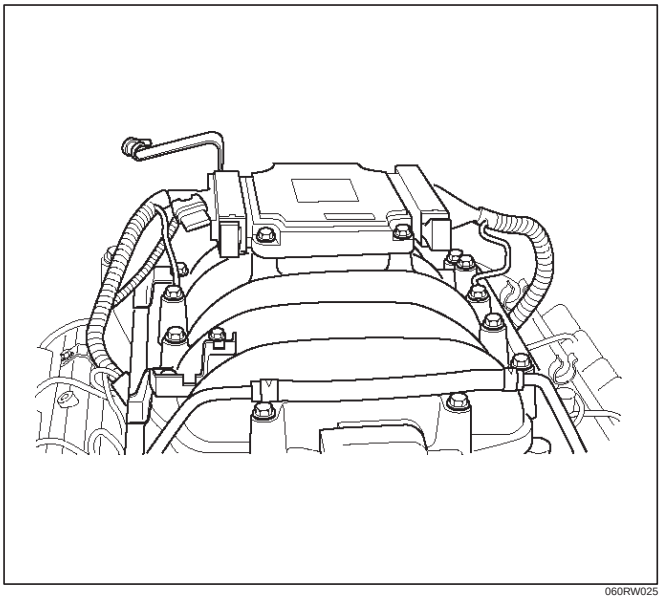

060RW025

ECM Components

The ECM is designed to maintain exhaust emission levels to government mandated standards while providing excellent driveability and fuel efficiency. The ECM monitors numerous engine and vehicle functions via electronic sensors such as the throttle position (TP) sensor, heated oxygen sensor (HO2S), and vehicle speed sensor (VSS). The ECM also controls certain engine operations through the following:

- Fuel injector control
- Ignition control module
- Evaporative emission (EVAP) purge
- A/C clutch control

ECM Voltage Description

The ECM supplies a buffered voltage to various switches and sensors. It can do this because resistance in the ECM is so high in value that a test light may not illuminate when connected to the circuit. An ordinary shop voltmeter may not give an accurate reading because the voltmeter input impedance is too low. Use a 10-megohm input impedance digital voltmeter (such as 5-8840-0285-0) to assure accurate voltage readings.

The input/output devices in the ECM include analog-to-digital converters, signal buffers, counters, and special drivers. The ECM controls most components with electronic switches which complete a ground circuit when turned “ON.”

ECM Input/Outputs

Inputs – Operating Conditions Read

- Air Conditioning “ON” or “OFF”
- Engine Coolant Temperature
- Crankshaft Position
- Exhaust Oxygen Content
- Electronic Ignition
- Barometric Pressure
- Battery Voltage
- Throttle Position
- Vehicle Speed
- Fuel Pump Voltage
- Power Steering Pressure
- Intake Air Temperature
- Mass Air Flow
- Camshaft Position

Outputs – Systems Controlled

- EVAP Canister Purge
- Ignition Control
- Fuel Control
- Idle Air Control
- Electric Fuel Pump
- Air Conditioning
- Diagnostics
  - Malfunction Indicator Lamp (Service Engine Soon lamp)
  - Data Link Connector (DLC)
  - Data Output

ECM Service Precautions

The ECM is designed to withstand normal current draws associated with vehicle operation. Avoid overloading any circuit. When testing for opens and shorts, do not ground or apply voltage to any of the ECM’s circuits unless instructed to do so. These circuits should only be tested using digital voltmeter 5-8840-0285-0. The ECM should remain connected to the ECM or to a recommended breakout box.

Throttle Position (TP) Sensor

The throttle position (TP) sensor is a potentiometer connected to the throttle shaft on the throttle body. The ECM monitors the voltage on the signal line and calculates throttle position. As the throttle valve angle is changed (accelerator pedal moved), the TP sensor signal also changes. At a closed throttle position, the output of the TP sensor is low. As the throttle valve opens, the output increases so that at wide open throttle (WOT), the output voltage should be above 4 volts.

The ECM calculates fuel delivery based on throttle valve angle (driver demand). A broken or loose TP sensor may cause intermittent bursts of fuel from an injector and unstable idle because the ECM thinks the throttle is moving. A hard failure in the TP sensor 5-volt reference or signal circuits will set either a DTC P0122 or DTC P0123. A hard failure with the TP sensor ground circuit may set DTC P0123 and DTC P0112. Once a DTC is set, the ECM will use an artificial default value based on engine RPM and mass air flow for the throttle position, and some vehicle performance will return. A high idle may result when either DTC P0122 or DTC P0123 is set. The ECM can detect intermittent TP sensor faults. The ECM can also detect a shifted TP sensor. The ECM monitors throttle position and compares the actual TP

sensor reading to a predicted TP value calculated from engine speed. If the ECM detects an out-of-range condition, DTC P0121 will be set.

Vehicle Speed Sensor (VSS)

The ECM determines the speed of the vehicle by converting a plusing voltage signal from the vehicle speed sensor (VSS) into miles per hour. The ECM uses this signal to operate the cruise control, speedometer, and the TCC and shift solenoids in the transmission. For more information on the TCC and shift solenoids, refer to *4L30-E Automatic Transmission.*

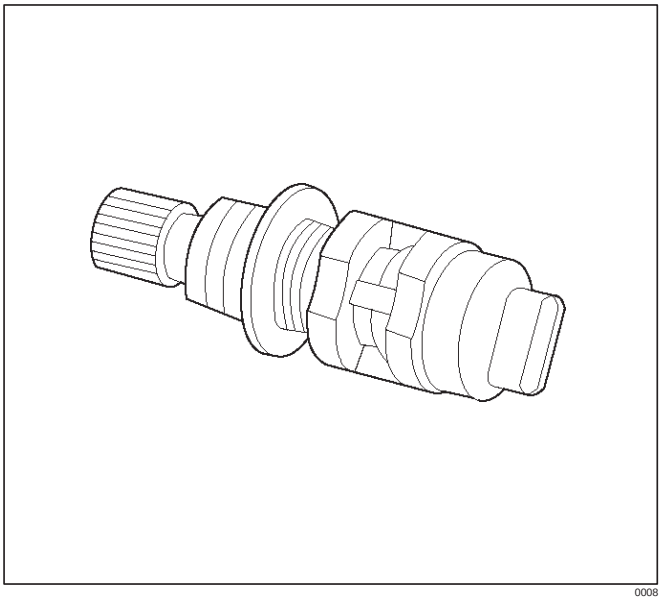

0008

Use of Circuit Testing Tools

Do not use a test light to diagnose the powertrain electrical systems unless specifically instructed by the diagnostic procedures. Use Connector Test Adapter Kit J 35616 whenever diagnostic procedures call for probing connectors.

Aftermarket Electrical and Vacuum Equipment

Aftermarket (add-on) electrical and vacuum equipment is defined as any equipment which connects to the vehicle's electrical or vacuum systems that is installed on a vehicle after it leaves the factory. No allowances have been made in the vehicle design for this type of equipment.

NOTE: No add-on vacuum equipment should be added to this vehicle.

NOTE: Add-on electrical equipment must only be connected to the vehicle's electrical system at the battery (power and ground).

Add-on electrical equipment, even when installed to these guidelines, may still cause the powertrain system to malfunction. This may also include equipment not connected to the vehicle electrical system such as portable telephones and radios. Therefore, the first step in diagnosing any powertrain problem is to eliminate all aftermarket electrical equipment from the vehicle. After this is done, if the problem still exists, it may be diagnosed in the normal manner.

Electrostatic Discharge Damage

Electronic components used in the ECM are often designed to carry very low voltage. Electronic components are susceptible to damage caused by electrostatic discharge. Less than 100 volts of static electricity can cause damage to some electronic components. By comparison, it takes as much as 4000 volts for a person to feel even the zap of a static discharge.

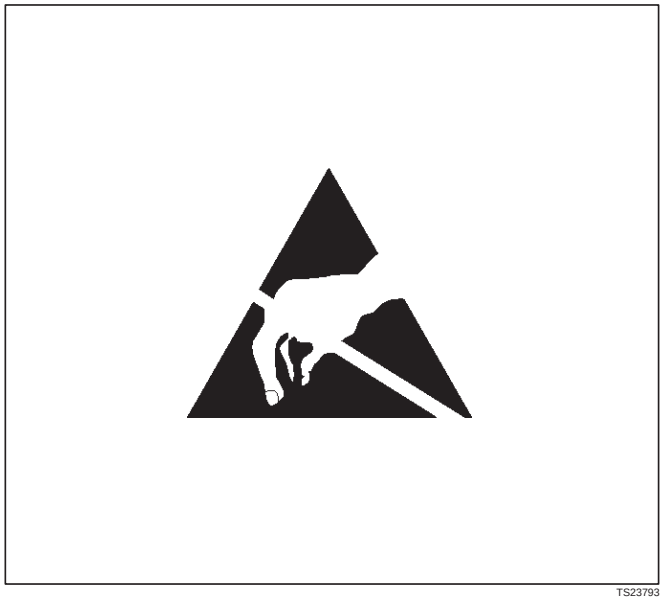

TS23793

There are several ways for a person to become statically charged. The most common methods of charging are by friction and induction.

- An example of charging by friction is a person sliding across a vehicle seat.
- Charge by induction occurs when a person with well insulated shoes stands near a highly charged object and momentary touches ground. Charges of the same polarity are drained off leaving the person highly charged with the opposite polarity. Static charges can cause damage, therefore it is important to use care when handling and testing electronic components.

NOTE: To prevent possible electrostatic discharge damage, follow these guidelines:

- Do not touch the ECM connector pins or soldered components on the ECM circuit board.
- Do not open the replacement part package until the part is ready to be installed.
- Before removing the part from the package, ground the package to a known good ground on the vehicle.
- If the part has been handled while sliding across the seat, while sitting down from a standing position, or while walking a distance, touch a known good ground before installing the part.

General Description (Air Induction)

Air Induction System

The air induction system filters contaminants from the outside air, and directs the progress of the air as it is drawn into the engine. A remote-mounted air cleaner prevents dirt and debris in the air from entering the engine. The air duct assembly routes filtered air to the throttle body. Air enters the engine by to following steps:

1. Through the throttle body.
2. Into the common chamber.
3. Through the cylinder head intake ports.
4. Into the cylinders.

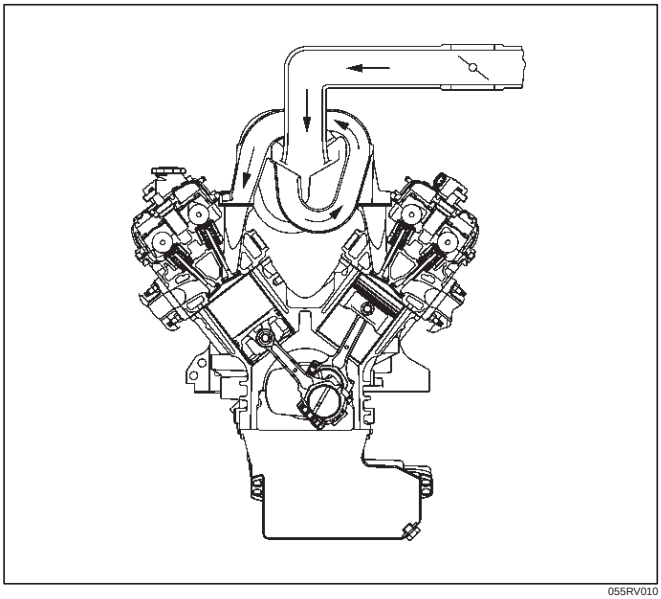

055RV010

General Description (Fuel Metering)

Acceleration Mode

The ECM provides extra fuel when it detects a rapid increase in the throttle position and the air flow.

Accelerator Controls

The accelerator control system is a cable-type system.

Battery Voltage Correction Mode

When battery voltage is low, the ECM will compensate for the weak spark by increasing the following:

- The amount of fuel delivered.
- The idle RPM.
- Ignition dwell time.

CMP Signal

The ECM uses this signal to determine the position of the number 1 piston during its power stroke, allowing the ECM to calculate true sequential multiport fuel injection (SFI). Loss of this signal will set a DTC P0341. If the CMP signal is lost while the engine is running, the fuel injection system will shift to a calculated sequential fuel injection based on the last fuel injection pulse, and the engine will continue to run. The engine can be restarted and will run in the calculated sequential mode as long as the fault is present, with a 1-in-6 chance of being correct.

Clear Flood Mode

Clear a flooded engine by pushing the accelerator pedal down all the way. The ECM then de-energizes the fuel injectors. The ECM holds the fuel injectors de-energized as long as the throttle remains above 80% and the engine speed is below 800 RPM. If the throttle position becomes less than 80%, the ECM again begins to pulse the injectors “ON” and “OFF,” allowing fuel into the cylinders.

Deceleration Mode

The ECM reduces the amount of fuel injected when it detects a decrease in the throttle position and the air flow. When deceleration is very fast, the ECM may cut off fuel completely for short periods.

Engine Speed/Vehicle Speed/Fuel Disable Mode

The ECM monitors engine speed. It turns off the fuel injectors when the engine speed increase above 6400 RPM. The fuel injectors are turned back on when engine speed decreases below 6150 RPM.

Fuel Cutoff Mode

No fuel is delivered by the fuel injectors when the ignition is “OFF.” This prevents engine run-on. In addition, the ECM suspends fuel delivery if no reference pulses are detected (engine not running) to prevent engine flooding.

Fuel Injector

The sequential multiport fuel injection (SFI) fuel injector is a solenoid-operated device controlled by the ECM. The ECM energizes the solenoid, which opens a valve to allow fuel delivery.

The fuel is injected under pressure in a conical spray pattern at the opening of the intake valve. Excess fuel not used by the injectors passes through the fuel pressure regulator before being returned to the fuel tank.

A fuel injector which is stuck partly open will cause a loss of fuel pressure after engine shut down, causing long crank times.

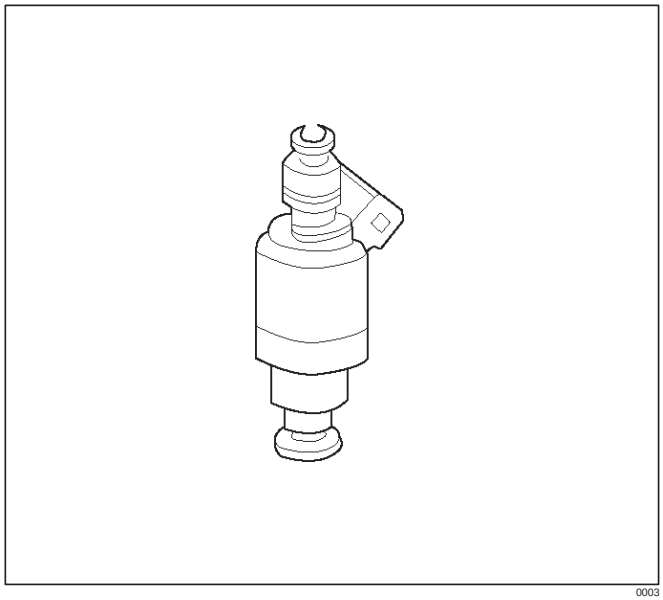

0003

Fuel Metering System Components

The fuel metering system is made up of the following parts:

- The fuel injectors.
- The throttle body.
- The fuel rail.
- The fuel pressure regulator.
- The ECM.
- The crankshaft position (CKP) sensor.
- The camshaft position (CMP) sensor.
- The idle air control (IAC) valve.
- The fuel pump.
- The fuel pump relay.

Basic System Operation

The fuel metering system starts with the fuel in the fuel tank. An electric fuel pump, located in the fuel tank, pumps fuel to the fuel rail through an in-line fuel filter. The pump is designed to provide fuel at a pressure above the pressure needed by the injectors. A fuel pressure regulator in the fuel rail keeps fuel available to the fuel injectors at a constant pressure. A return line delivers unused fuel back to the fuel tank. Refer to *Section 6C* for further information on the fuel tank, line filter, and fuel pipes.

Fuel Metering System Purpose

The basic function of the air/fuel metering system is to control the air/fuel delivery to the engine. Fuel is delivered to the engine by individual fuel injectors mounted in the intake manifold near each intake valve.

The main control sensor is the heated oxygen sensor (HO2S) located in the exhaust system. The HO2S tells the ECM how much oxygen is in the exhaust gas. The ECM changes the air/fuel ratio to the engine by controlling the amount of time that fuel injector is “ON.” The best mixture to minimize exhaust emissions is 14.7 parts of air to 1 part of gasoline by weight, which allows the catalytic converter to operate most efficiently. Because of the constant measuring and adjusting of the air/fuel ratio, the fuel injection system is called a “closed loop” system.

The ECM monitors signals from several sensors in order to determine the fuel needs of the engine. Fuel is delivered under one of several conditions called “modes.” All modes are controlled by the ECM.

Fuel Pressure Regulator

The fuel pressure regulator is a diaphragm-operated relief valve mounted on the fuel rail with fuel pump pressure on one side and manifold pressure on the other side. The fuel pressure regulator maintains the fuel pressure available to the injector at three times barometric pressure adjusted for engine load. It may be serviced separate.

If the pressure is too low, poor performance and a DTC P0131,DTC P0171 or DTC P1171 will be the result. If the pressure is too high, excessive odor and/or a DTC P0132, DTC P0172 will be the result. Refer to *Fuel System Diagnosis* for information on diagnosing fuel pressure conditions.

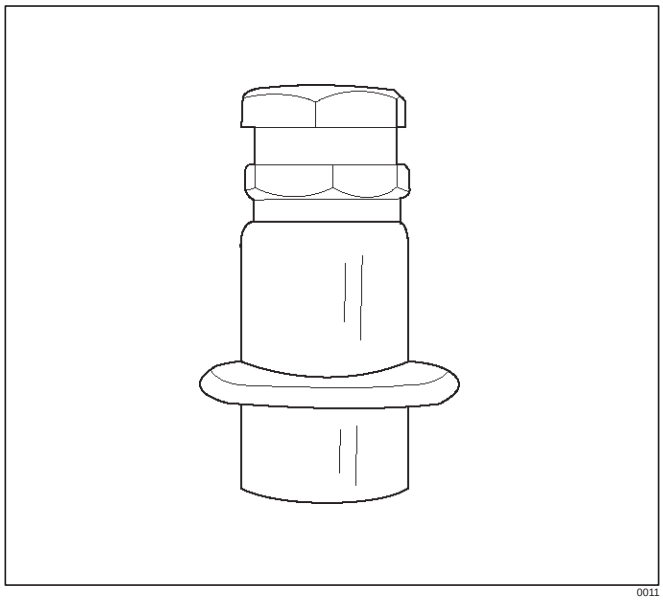

0011

Fuel Pump Electrical Circuit

When the key is first turned “ON,” the ECM energizes the fuel pump relay for two seconds to build up the fuel pressure quickly. If the engine is not started within two seconds, the ECM shuts the fuel pump off and waits until the engine is cranked. When the engine is cranked and the 58 X crankshaft position signal has been detected by the ECM, the ECM supplies 12 volts to the fuel pump relay to energize the electric in-tank fuel pump.

An inoperative fuel pump will cause a “no-start” condition. A fuel pump which does not provide enough pressure will result in poor performance.

Fuel Rail

The fuel rail is mounted to the top of the engine and distributes fuel to the individual injectors. Fuel is delivered to the fuel inlet tube of the fuel rail by the fuel lines. The fuel goes through the fuel rail to the fuel pressure regulator. The fuel pressure regulator maintains a constant fuel pressure at the injectors. Remaining fuel is then returned to the fuel tank.

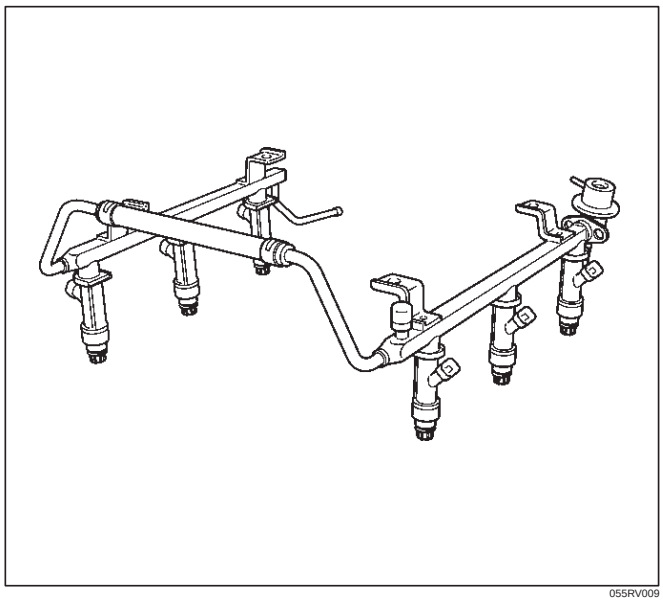

055RV009

Idle Air Control (IAC) Valve

The purpose of the idle air control (IAC) valve is to control engine idle speed, while preventing stalls due to changes in engine load. The IAC valve, mounted in the throttle body, controls bypass air around the throttle plate. By moving the conical valve (pintle) in (to decrease air flow) or out (to increase air flow), a controlled amount of air can move around the throttle plate. If the RPM is too low, the ECM will retract the IAC pintle, resulting in more air moving past the throttle plate to increase the RPM. If the RPM is too high, the ECM will extend the IAC pintle, allowing less air to move past the throttle plate, decreasing the RPM.

The IAC pintle valve moves in small steps called counts. During idle, the proper position of the IAC pintle is calculated by the ECM based on battery voltage, coolant temperature, engine load, and engine RPM. If the RPM drops below a specified value, and the throttle plate is closed, the ECM senses a near-stall condition. The ECM will then calculate a new IAC pintle valve position to prevent stalls.

If the IAC valve is disconnected and reconnected with the engine running, the idle RPM will be wrong. In this case, the IAC must be reset. The IAC resets when the key is cycled “ON” then “OFF.” When servicing the IAC, it should only be disconnected or connected with the ignition “OFF.”

The position of the IAC pintle valve affects engine start-up and the idle characteristics of the vehicle. If the IAC pintle is fully open, too much air will be allowed into the manifold. This results in high idle speed, along with possible hard starting and a lean air/fuel ratio. DTC P1509 may set. If the IAC pintle is stuck closed, too little air will be allowed in the manifold. This results in a low idle speed, along with possible hard starting and a rich air/fuel ratio. DTC P1508 may set. If the IAC pintle is stuck part-way open, the idle may be high or low and will not respond to changes in the engine load.

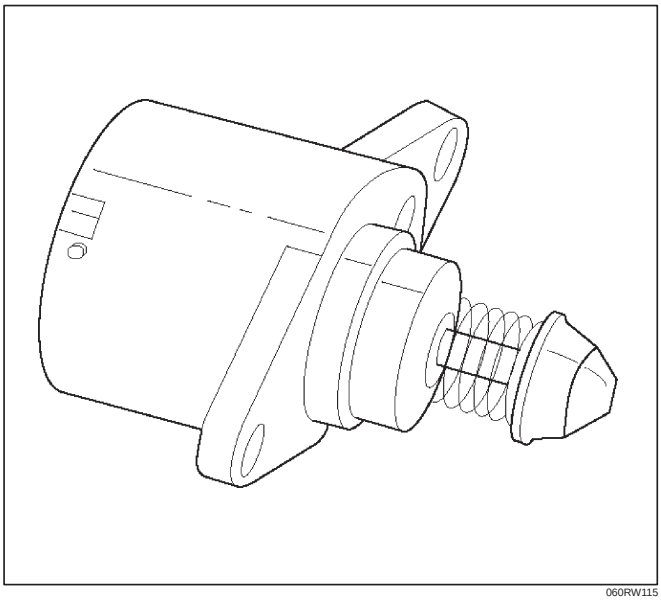

060RW115

Run Mode

The run mode has the following two conditions:

- Open loop
- Closed loop

When the engine is first started the system is in “open loop” operation. In “open loop,” the ECM ignores the signal from the heated oxygen sensor (HO2S). It calculates the air/fuel ratio based on inputs from the TP, ECT, and MAF sensors.

The system remains in “open loop” until the following conditions are met:

- The HO2S has a varying voltage output showing that it is hot enough to operate properly (this depends on temperature).
- The ECT has reached a specified temperature.
- A specific amount of time has elapsed since starting the engine.
- Engine speed has been greater than a specified RPM since start-up.

The specific values for the above conditions vary with different engines and are stored in the programmable read only memory (PROM). When these conditions are met, the system enters “closed loop” operation. In “closed loop,” the ECM calculates the air/fuel ratio (injector on-time) based on the signal from the HO2S. This allows the air/fuel ratio to stay very close to 14.7:1.

Starting Mode

When the ignition is first turned “ON,” the ECM energizes the fuel pump relay for two seconds to allow the fuel pump to build up pressure. The ECM then checks the engine coolant temperature (ECT) sensor and the throttle position (TP) sensor to determine the proper air/fuel ratio for starting.

The ECM controls the amount of fuel delivered in the starting mode by adjusting how long the fuel injectors are energized by pulsing the injectors for very short times.

Throttle Body Unit

The throttle body has a throttle plate to control the amount of air delivered to the engine. The TP sensor and IAC valve are also mounted on the throttle body. Vacuum ports located behind the throttle plate provide the vacuum signals needed by various components.

Engine coolant is directed through a coolant cavity in the throttle body to warm the throttle valve and to prevent icing.

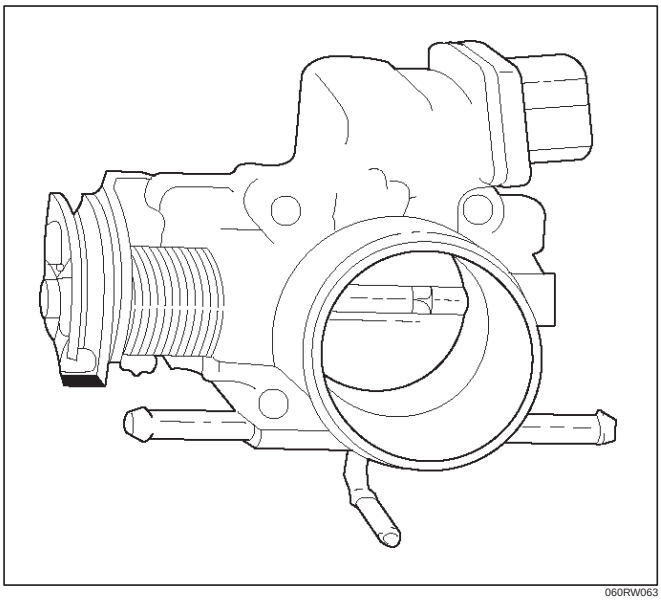

060RW063

General Description (Electronic Ignition System)

Camshaft Position (CMP) Sensor

The camshaft position (CMP) sensor is located on the timing cover near the camshaft sprocket. As the camshaft sprocket turns, a magnet in the sprocket activates the Hall-effect switch in the CMP sensor. When the Hall-effect switch is activated, it grounds the signal line to the ECM, pulling the camshaft position sensor signal circuit's applied voltage low. This is a CMP signal. The CMP signals is created as piston #1 is approximately 25° after top dead counter on the power stroke. If the correct CMP signal is not received by the ECM, DTC P0341 will be set.

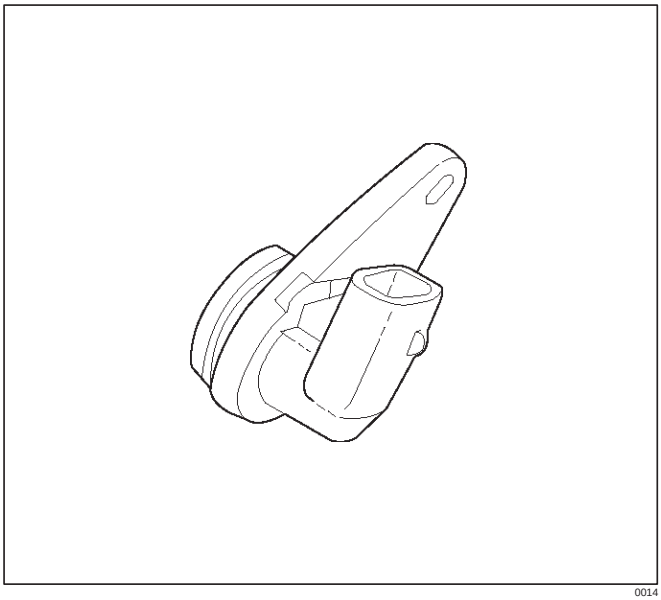

0014

Crankshaft Position (CKP) Sensor

The crankshaft position (CKP) sensor provides a signal used by the engine control module (ECM) to calculate the ignition sequence. The sensor initiates the 58X reference pulses which the ECM uses to calculate RPM and crankshaft position. Refer to *Electronic Ignition System* for additional information.

Electronic Ignition

The electronic ignition system controls fuel combustion by providing a spark to ignite the compressed air/fuel mixture at the correct time. To provide optimum engine performance, fuel economy, and control of exhaust emissions, the ECM controls the spark advance of the ignition system. Electronic ignition has the following advantages over a mechanical distributor system:

- No moving parts.
- Less maintenance.
- Remote mounting capability.
- No mechanical load on the engine.
- More coil cooldown time between firing events.
- Elimination of mechanical timing adjustments.
- Increased available ignition coil saturation time.

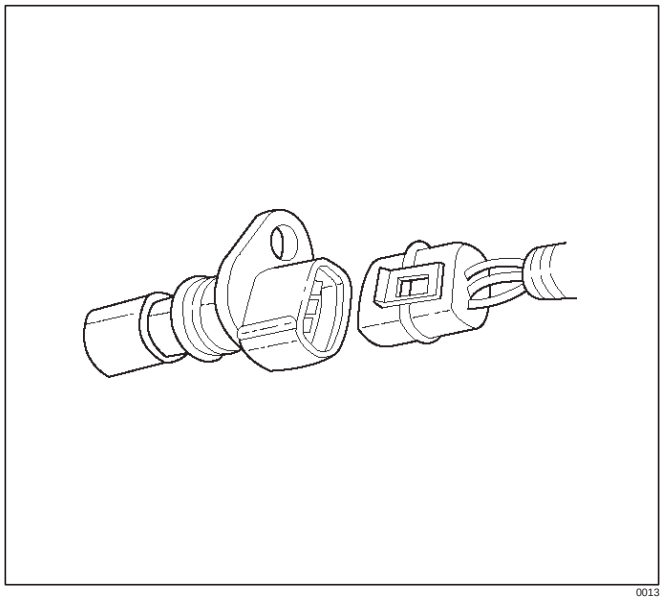

0013

Ignition Coils

A separate coil-at-plug module is located at each spark plug. The coil-at-plug module is attached to the engine with two screws. It is installed directly to the spark plug by an electrical contact inside a rubber boot. A three-way connector provides 12-volt primary supply from the 15-amp ignition fuse, a ground-switching trigger line from the ECM, and a ground.

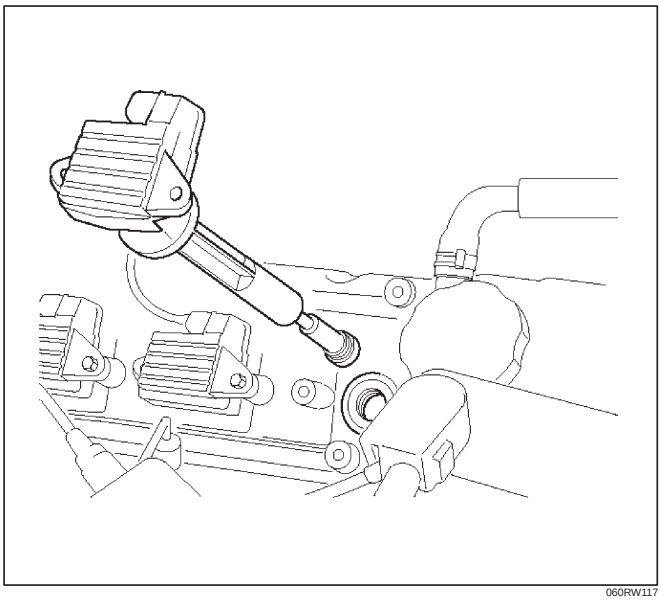

060RW117

Ignition Control

The ignition control (IC) spark timing is the ECM's method of controlling the spark advance and the ignition dwell. The IC spark advance and the ignition dwell are calculated by the ECM using the following inputs:

- Engine speed.
- Crankshaft position.
- Camshaft position (CMP) sensor.
- Engine coolant temperature (ECT) sensor.
- Throttle position (TP) sensor.
- Park/Neutral position (PRNDL input).
- Vehicle speed (vehicle speed sensor).
- ECM and ignition system supply voltage.
- The crankshaft positron (CKP) sensor sends the ECM a signal related to the exact position of the crankshaft.

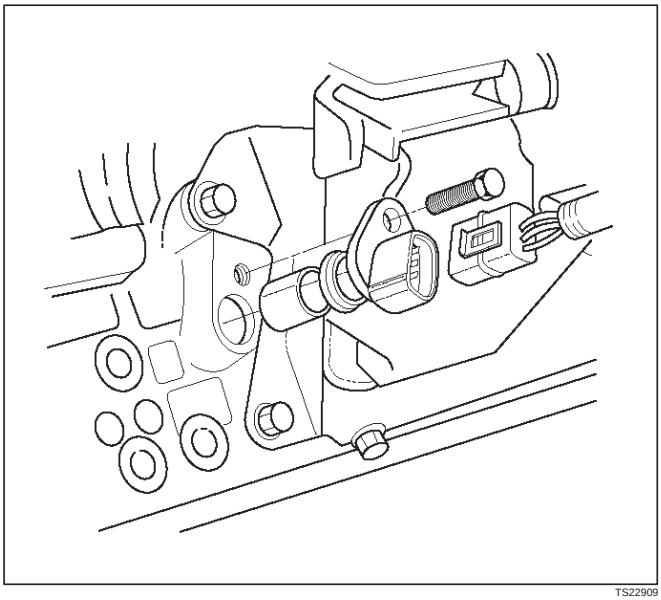

TS22909

- The camshaft position (CMP) sensor sends a signal related to the position of the camshaft.

Based on these sensor signals and engine load information, the ECM sends 5V to each ignition coil.

The ECM applies 5V signal voltage to the ignition coil requiring ignition. This signal sets on the power transistor of the ignition coil to establish a grounding circuit for the primary coil, applying battery voltage to the primary coil. At the ignition timing, the ECM stops sending the 5V signal voltage. Under this condition the power transistor of the ignition coil is set off to cut the battery voltage to the primary coil, thereby causing a magnetic field generated in the primary coil to collapse. On this moment a line of magnetic force flows to the secondary coil, and when this magnetic line crosses the coil, high voltage induced by the secondary ignition circuit to flow through the spark plug to the ground.

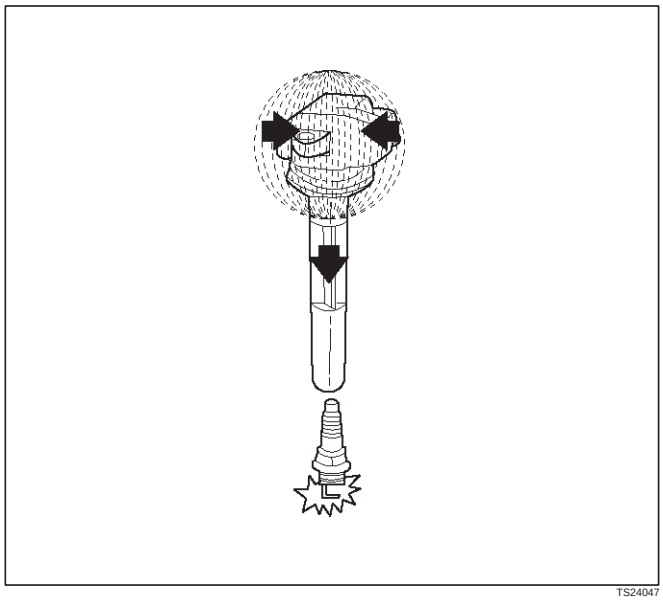

TS24047

Ignition Control ECM Output

The ECM provides a zero volt (actually about 100 mV to 200 mV) or a 5-volt output signal to the ignition control (IC) module. Each spark plug has its own primary and secondary coil module ("coil-at-plug") located at the spark plug itself. When the ignition coil receives the 5-volt signal from the ECM, it provides a ground path for the B+ supply to the primary side of the coil-at -plug module. This energizes the primary coil and creates a magnetic field in the coil-at-plug module. When the ECM shuts off the 5-volt signal to the ignition control module, the ground path for the primary coil is broken. The magnetic field collapses and induces a high voltage secondary impulse which fires the spark plug and ignites the air/fuel mixture. The circuit between the ECM and the ignition coil is monitored for open circuits, shorts to voltage, and shorts to ground. If the ECM detects one of these events, it will set one of the following DTCs:

- P0351: Ignition coil Fault on Cylinder #1
- P0352: Ignition coil Fault on Cylinder #2
- P0353: Ignition coil Fault on Cylinder #3
- P0354: Ignition coil Fault on Cylinder #4

- P0355: Ignition coil Fault on Cylinder #5
- P0356: Ignition coil Fault on Cylinder #6

Engine Control Module (ECM)

The ECM is responsible for maintaining proper spark and fuel injection timing for all driving conditions. To provide optimum driveability and emissions, the ECM monitors the input signals from the following components in order to calculate spark timing:

- Engine coolant temperature (ECT) sensor.
- Intake air temperature (IAT) sensor.
- Mass air flow (MAF) sensor.
- PRNDL input from transmission range switch.
- Throttle position (TP) sensor.
- Vehicle speed sensor (VSS) .
- Crankshaft position (CKP) sensor.

Spark Plug

Although worn or dirty spark plugs may give satisfactory operation at idling speed, they frequency fail at higher engine speeds. Faulty spark plugs may cause poor fuel economy, power loss, loss of speed, hard starting and generally poor engine performance. Follow the scheduled maintenance service recommendations to ensure satisfactory spark plug performance. Refer to *Maintenance and Lubrication*.

Normal spark plug operation will result in brown to grayish-tan deposits appearing on the insulator portion of the spark plug. A small amount of red-brown, yellow, and white powdery material may also be present on the insulator tip around the center electrode. These deposits are normal combustion by-products of fuels and lubricating oils with additives. Some electrode wear will also occur. Engines which are not running properly are often referred to as “misfiring.” This means the ignition spark is not igniting the air/fuel mixture at the proper time. Spark plugs may also misfire due to fouling, excessive gap, or a cracked or broken insulator. If misfiring occurs before the recommended replacement interval, locate and correct the cause.

Carbon fouling of the spark plug is indicated by dry, black carbon (soot) deposits on the portion of the spark plug in the cylinder. Excessive idling and slow speeds under light engine loads can keep the spark plug temperatures so low that these deposits are not burned off. Very rich fuel mixtures or poor ignition system output may also be the cause. Refer to DTC P0172.

Oil fouling of the spark plug is indicated by wet oily deposits on the portion of the spark plug in the cylinder, usually with little electrode wear. This may be caused by oil during break-in of new or newly overhauled engines.

Deposit fouling of the spark plug occurs when the normal red-brown, yellow or white deposits of combustion by products become sufficient to cause misfiring. In some cases, these deposits may melt and form a shiny glaze on the insulator around the center electrode. If the fouling is found in only one or two cylinders, valve stem clearances or intake valve seals may be allowing excess lubricating oil to enter the cylinder, particularly if the deposits are heavier on the side of the spark plug facing the intake valve.

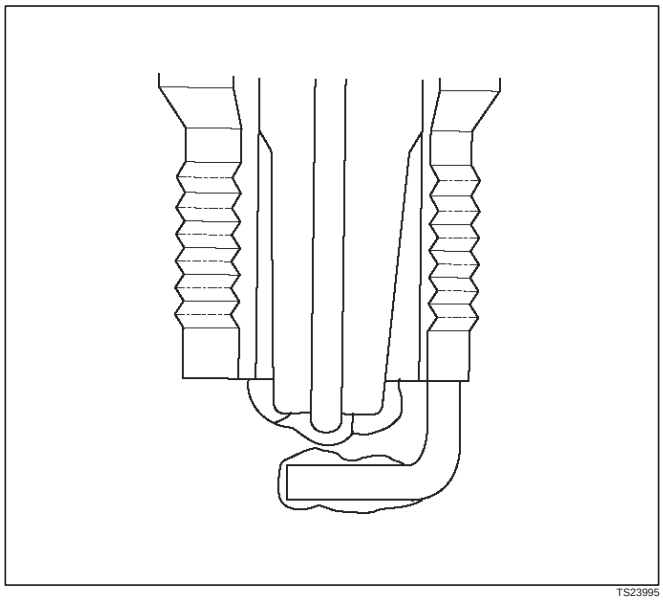

TS23995

Excessive gap means that the air space between the center and the side electrodes at the bottom of the spark plug is too wide for consistent firing. This may be due to improper gap adjustment or to excessive wear of the electrode during use. A check of the gap size and comparison to the gap specified for the vehicle in *Maintenance and Lubrication* will tell if the gap is too wide. A spark plug gap that is too small may cause an unstable idle condition. Excessive gap wear can be an indication of continuous operation at high speeds or with engine loads, causing the spark to run too hot. Another possible cause is an excessively lean fuel mixture.

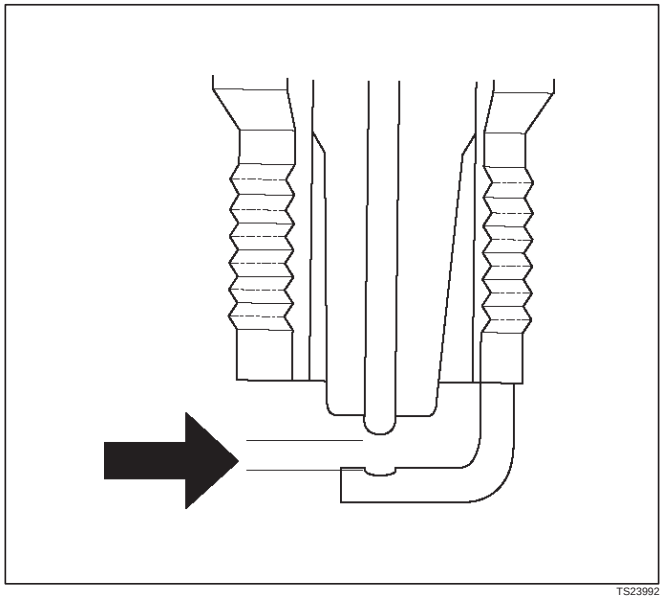

TS23992

Low or high spark plug installation torque or improper seating can result in the spark plug running too hot and can cause excessive center electrode wear. The plug and the cylinder head seats must be in good contact for proper heat transfer and spark plug cooling. Dirty or damaged threads in the head or on the spark plug can keep it from seating even though the proper torque is applied. Once spark plugs are properly seated, tighten them to the torque shown in the Specifications Table. Low

torque may result in poor contact of the seats due to a loose spark plug. Overtightening may cause the spark plug shell to be stretched and will result in poor contact between the seats. In extreme cases, exhaust blow-by and damage beyond simple gap wear may occur.

Cracked or broken insulators may be the result of improper installation, damage during spark plug re-gapping, or heat shock to the insulator material. Upper insulators can be broken when a poorly fitting tool is used during installation or removal, when the spark plug is hit from the outside, or is dropped on a hard surface. Cracks in the upper insulator may be inside the shell and not visible. Also, the breakage may not cause problems until oil or moisture penetrates the crack later.

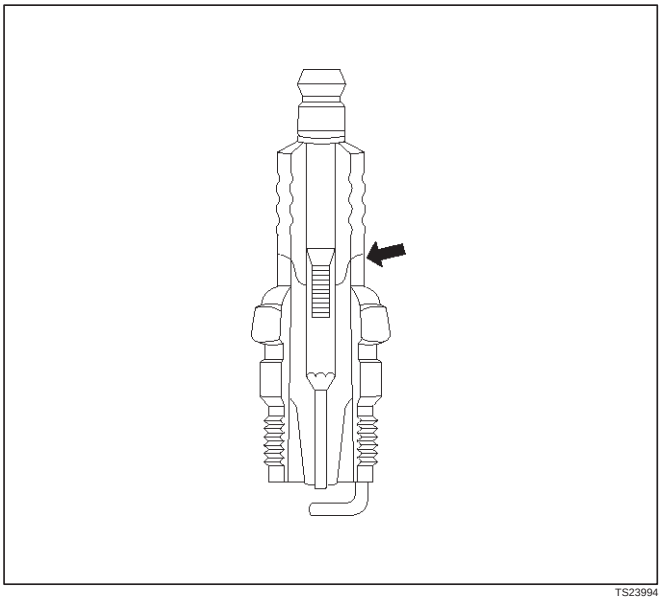

TS23994

A broken or cracked lower insulator tip (around the center electrode) may result from damage during re-gapping or from “heat shock” (spark plug suddenly operating too hot).

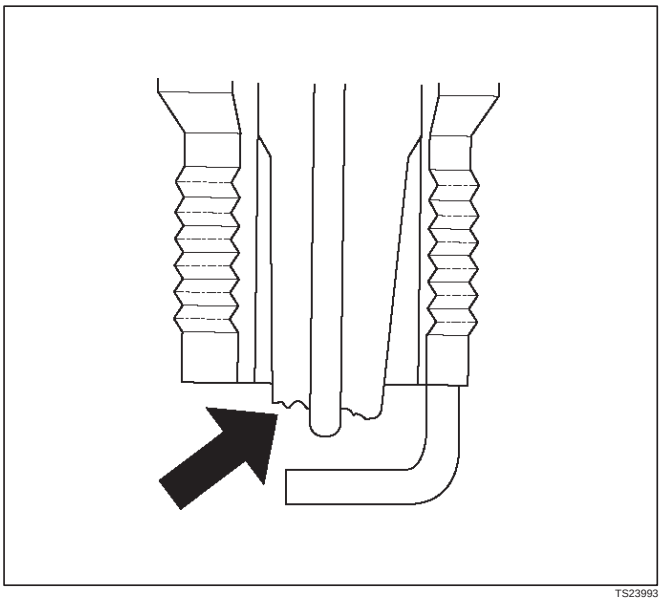

TS23993

- Damage during re-gapping can happen if the gapping tool is pushed against the center electrode or the insulator around it, causing the insulator to crack. When re-gapping a spark plug, make the adjustment by bending only the ground side terminal, keeping the tool clear of other parts.
- ”Heat shock” breakage in the lower insulator tip generally occurs during several engine operating conditions (high speeds or heavy loading) and may be caused by over-advanced timing or low grade fuels. Heat shock refers to a rapid increase in the tip temperature that causes the insulator material to crack.

Spark plugs with less than the recommended amount of service can sometimes be cleaned and re-gapped , then returned to service. However, if there is any doubt about the serviceability of a spark plug, replace it. Spark plugs with cracked or broken insulators should always be replaced.

A/C Clutch Diagnosis

A/C Clutch Circuit Operation

A 12-volt signal is supplied to the A/C request input of the ECM when the A/C is selected through the A/C control switch.

The A/C compressor clutch relay is controlled through the ECM. This allows the ECM to modify the idle air control position prior to the A/C clutch engagement for better idle quality. If the engine operating conditions are within their specified calibrated acceptable ranges, the ECM will enable the A/C compressor relay. This is done by providing a ground path for the A/C relay coil within the ECM. When the A/C compressor relay is enabled, battery voltage is supplied to the compressor clutch coil. The ECM will enable the A/C compressor clutch whenever the engine is running and the A/C has been requested. The ECM will not enable the A/C compressor clutch if any of the following conditions are met:

- The throttle is greater than 90%.
- The engine speed is greater than 6315 RPM.
- The ECT is greater than 119˚C (246˚F).
- The IAT is less than 5˚C (41˚F).
- The throttle is more than 80% open.

A/C Clutch Circuit Purpose

The A/C compressor operation is controlled by the engine control module (ECM) for the following reasons:

- It improvises idle quality during compressor clutch engagement.
- It improvises wide open throttle (WOT) performance.
- It provides A/C compressor protection from operation with incorrect refrigerant pressures.

The A/C electrical system consists of the following components:

- The A/C control head.
- The A/C refrigerant pressure switches.
- The A/C compressor clutch.
- The A/C compressor clutch relay.
- The ECM.

A/C Request Signal

This signal tells the ECM when the A/C mode is selected at the A/C control head. The ECM uses this to adjust the idle speed before turning on the A/C clutch. The A/C compressor will be inoperative if this signal is not available to the ECM.
Refer to *A/C Clutch Circuit Diagnosis* for A/C wiring diagrams and diagnosis for A/C electrical system.

General Description (Evaporative (EVAP) Emission System)

EVAP Emission Control System Purpose

The basic Evaporative Emission (EVAP) Control System used on all vehicle is the charcoal canister storage method. This method transfers fuel vapor from the fuel tank to an activated carbon (charcoal) storage device (canister) to hold the vapors when the vehicle is not operating. When the engine is running, the fuel vapor is purged from the carbon element by intake air flow and consumed in the normal combustion process.

Vapor Canister

Gasoline vapors from the fuel tank flow into the tube labeled tank. Any liquid fuel goes into a reservoir in the bottom of the canister to protect the integrity of the carbon bed above. These vapors are absorbed into the carbon. The canister is purged when the engine is running or commanded by Engine Control Module (ECM). Ambient air is allowed into the canister through the air tube in the top. The air mixes with the vapor and the mixture is drawn into the intake manifold.

Evap Control System

The solenoid used with this canister uses Vacuum Switch Valve to control purge. The ECM opens and closes the solenoid to control purge.
The ECM energizes the solenoid valve and allows purge when:

- Engine is warm above 69˚C (156˚F).
- After the engine has been running a specified time.

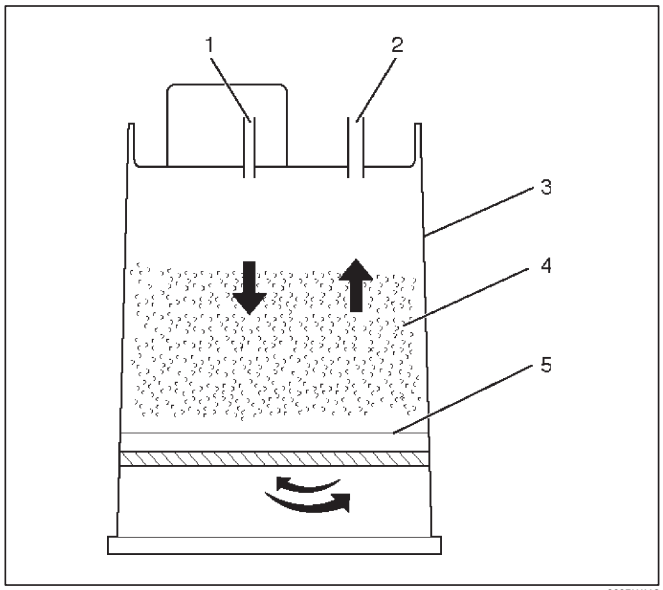

060RW118

Legend

(1) Vapor from Fuel Tank
(2) Evaporate Emission Canister Purge Vacuum
(3) Canister Body
(4) Carbon
(5) Filter
(6) Grid
(7) Air Flow During Purge

- Throttle position is above 7% throttle position sensor.

Results of Incorrect Operation

Poor idle, stalling and poor driveability can be caused by:

- Inoperative purge solenoid.
- Damaged canister.
- Hoses split, cracked and/or not connected to the proper tubes.

Evidence of fuel loss or fuel vapor odor can be caused by:

- Liquid fuel leaking from fuel lines, or fuel pump.
- Cracked or damaged canister.
- Disconnected, misrouted, kinked, deteriorated or damaged vapor hoses, or control hoses.

If the solenoid is always open, the canister can purge to the intake manifold at all times. This can allow extra fuel at idle or during warm-up, which can cause rough or unstable idle, or too rich operation.
If the solenoid is always closed, the canister can become over-loaded, resulting in fuel odor.

Diagnosis

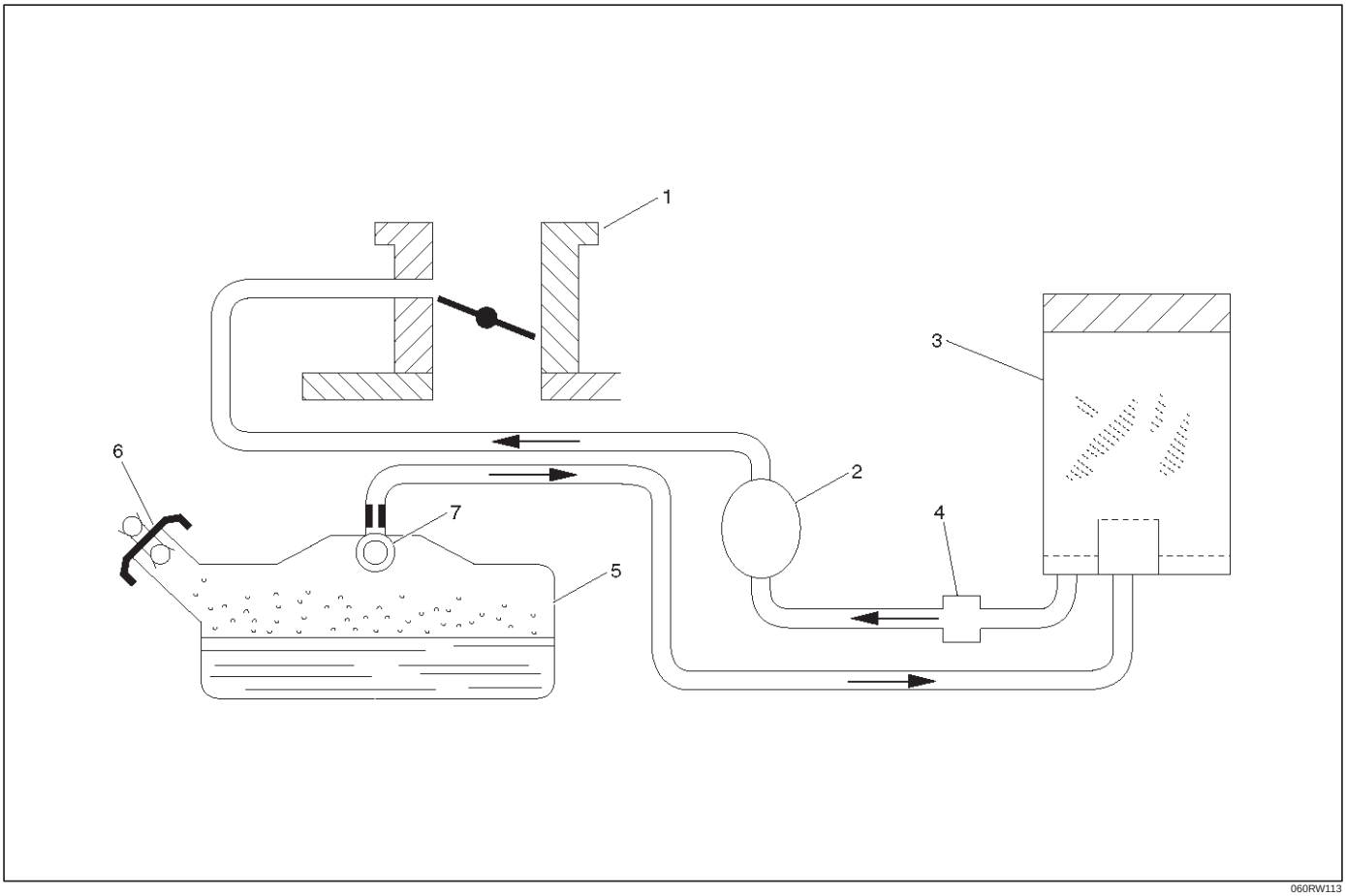

Legend

(1) Throttle Body
(2) Fuel Vapor Purge Control Solenoid
(3) Fuel Vapor Canister
(4) Check and Relief Valve
(5) Fuel Tank
(6) Pressure/Vacuum Vented
(7) Rollover Valve

Visual Check of Canister

Cracked or damaged, replace canister.

Evaporate Emission Canister Purge Valve Check

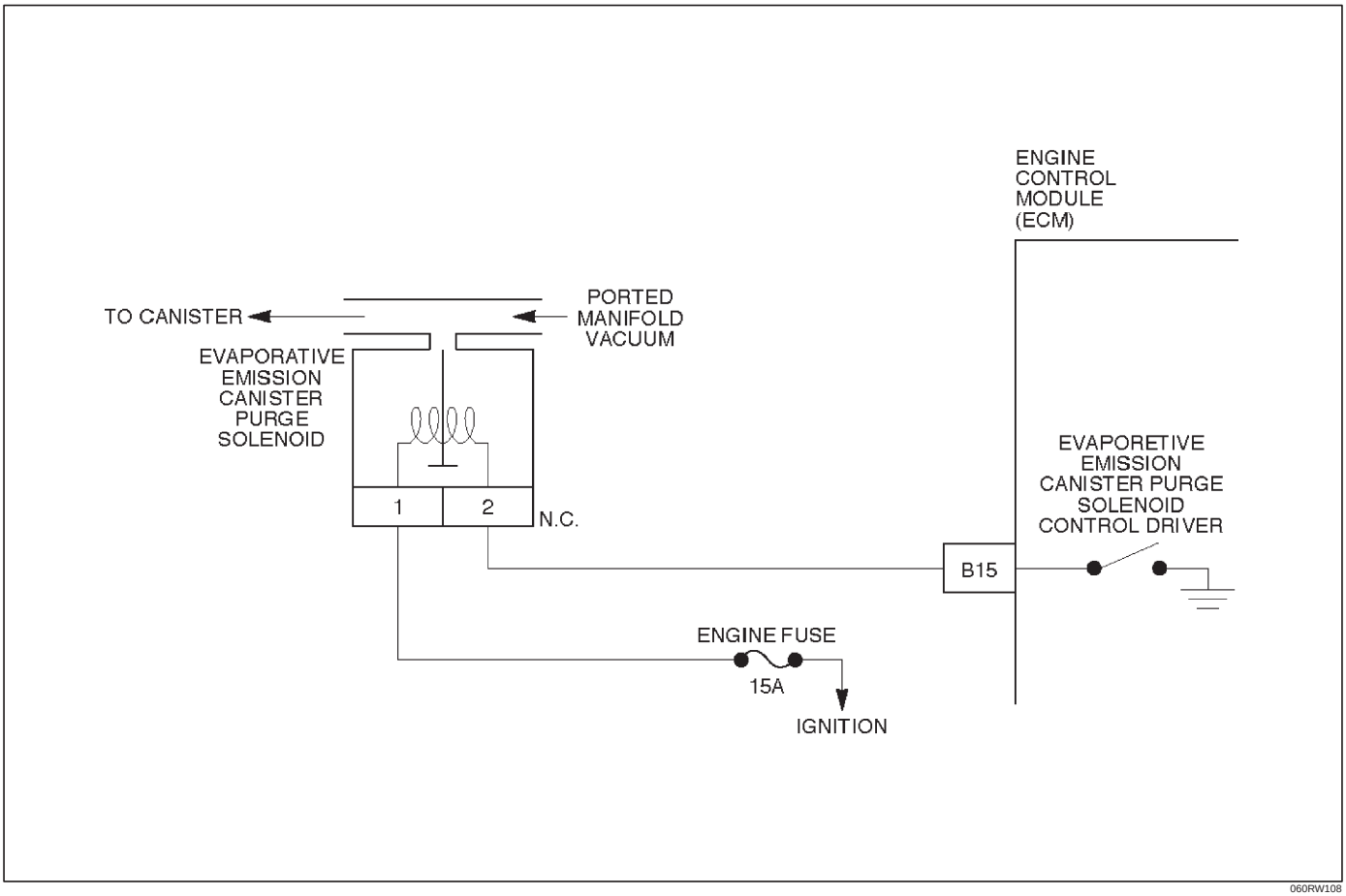

060RW108

Circuit Description:

Evaporate emission canister purge is controlled by a solenoid that allows manifold and/or ported vacuum to purge the canister when energized. The Engine Control Module (ECM) supplies a ground to energize the solenoid (purge “ON”). The purge solenoid control by the ECM is turned “;ON” or “;OFF” under specific engine conditions. The purge solenoid is turned “;ON” when all of the following conditions are met.

- Data link connector is ungrounded.
- Engine run time after start more than 20 seconds.
- Engine coolant temperature above 60˚C.
- Vehicle speed is above 9 mile per hour.

Also, if the diagnostic test terminal is grounded with the engine stopped, the purge solenoid is energized (purge “ON”).

Test Description:

Numbers below refer to circled numbers on the diagnostic chart.

1. Check to see if the solenoid is opened or closed. The solenoid is normally de-energized in this step, so it should be closed.
2. Check to determine if solenoid was open due to electrical CKT problem or defective solenoid.
3. Completes functional check by grounding test terminal. This should normally energize the solenoid opening the valve which should allow the vacuum to drop (purge “ON”).

Diagnostic Aids:

Make a visual check of vacuum hose(s). Check throttle body for possible cracked, or plugged vacuum block. Malfunction indicator lamp for possible mechanical problem.

Special Tools

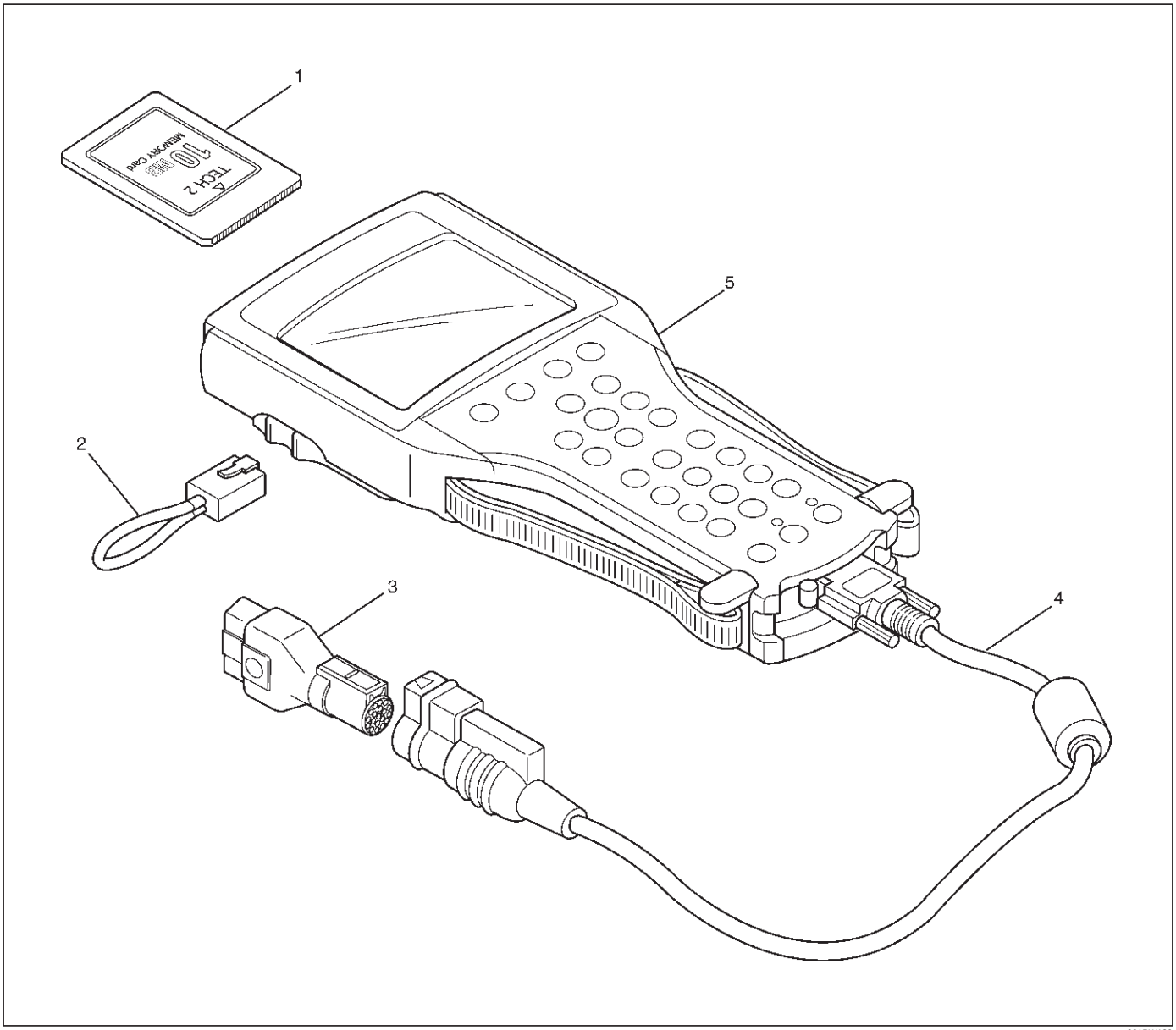

901RW180

Legend

(1) PCMCIA Card
(2) RS232 Loop Back Connector
(3) SAE 16/19 Adapter
(4) DLC Cable
(5) TECH 2

ILLUSTRATION	**TOOL NO.** TOOL NAME
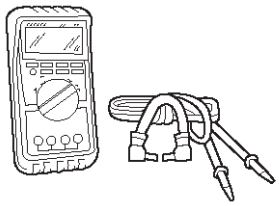	**5–8840–0285–0** **(J 39200)** High Impedance Multimeter (Digital Voltmeter – DVM)
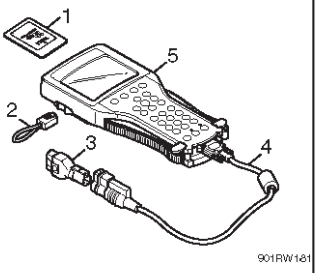	(1) PCMCIA Card (2) RS232 Loop Back Connector (3) SAE 16/19 Adapter (4) DLC Cable (5) TECH 2
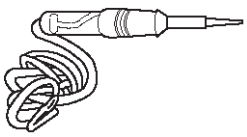	**5–8840–0607–0** **(J 34142-B)** Unpowered Test Light
	5–8840–0385–0 **(J 35616-A/BT-8637)** Connector Test Adapter Kit
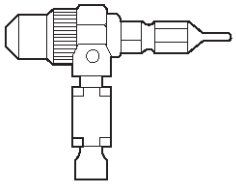	**5–8840–0383–0** **(J 26792/BT-7220-1)** Spark Tester
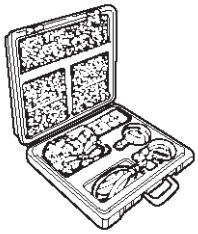	**5–8840–0378–0** **(J 34730-E)** Port Fuel Injection Diagnostic Kit

ILLUSTRATION	**TOOL NO.** TOOL NAME
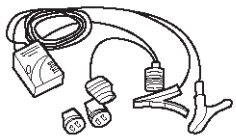	**5–8840–2312–0** **(J 37027-A)** IAC Motor Analyzer
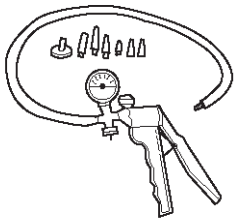	**5–8840–0279–0** **(J 23738-A)** Vacuum Pump with Gauge
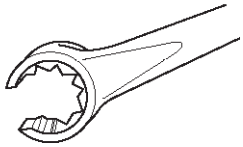	**5–8840–2640–0** **(J 39194-B)** Heated Oxygen Sensor Wrench
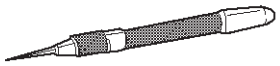	**5–8840–0632–0** **(J 35689-A)** Terminal Remover
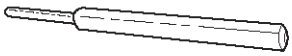	**5–8840–0388–0** **(J 28742-A)** Weather Pack II Terminal Remover
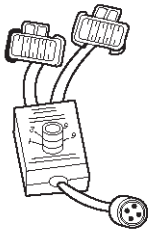	**5–8840–2635–0** **(J 39021-90)** Injector Switch Box

ILLUSTRATION	**TOOL NO.** TOOL NAME
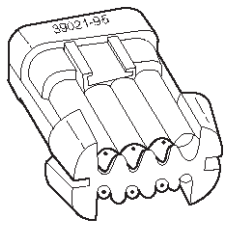	**5–8840–2636–0** **(J 39021-65)** Injector Test Light
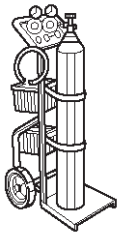	**5–8840–2607–0** **(J 41413)** EVAP Pressure/Purge Diagnostic Station
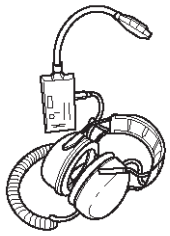	**5–8840–2608–0** **(J 41416)** Ultrasonic Leak Detector

1. 5–8840–2607–0 (J 41413) EVAP Pressure/Purge Diagnostic Station is a multipurpose tool which is used to perform several diagnostic procedures for enhanced emission testing. The station will accommodate a nitrogen gas filled cylinder which is used to pressurize the vehicle EVAP system for a leakdown test and leak location test when a vehicle is repaired for leakage in the enhanced evaporative emission control system. It also has two additional gauges (inches of mercury and inches of water) which are used to measure both source vacuum and EVAP canister purge vacuum to verify correct operation and vapor flow within the canister purge circuit.
2. 5–8840–2608–0 (J 41416) Ultrasonic Leak Detector is a microprocessor-based device used to detect leaks in the enhanced evaporative emission control system. The evaporative system is pressurized to 30 inches of water using the 5–8840–2607–0 (J 41413) EVAP Pressure/Purge Diagnostic System. Small leaks in the EVAP system will emit sound at a high frequency undetectable by a human ear but detectable with the 5–8840–2608–0 (J 41416). The technician traces along the evaporative system and can pinpoint leaks due to corroded lines, cracked hoses, or a damaged EVAP component. The detector includes a high quality set of headphones to block out surrounding shop noise and the LED sensitivity meter allows a visual reference for locating leaks in conjunction with the audio output heard through the headphones. Powered by (1) nine volt battery.

ENGINE

ENGINE EXHAUST (6VD1 3.2L)

CONTENTS

Service Precaution 6F–1
General Description 6F–2
Three Way Catalytic Converter and Forked Exhaust Pipe 6F–3
Three Way Catalytic Converter and Front Exhaust Pipe and Associated Parts 6F–3
Removal 6F–3
Installation 6F–3
Exhaust Silencer 6F–4
Exhaust Silencer and Associated Parts . . . 6F–4
Removal 6F–4
Installation 6F–4
Rear Exhaust pipe 6F–5
Rear Exhaust pipe and Associated Parts . 6F–5
Removal 6F–5
Installation 6F–5
Main Data and Specifications 6F–6

Service Precaution

WARNING: THIS VEHICLE HAS A SUPPLEMENTAL RESTRAINT SYSTEM (SRS). REFER TO THE SRS COMPONENT AND WIRING LOCATION VIEW IN ORDER TO DETERMINE WHETHER YOU ARE PERFORMING SERVICE ON OR NEAR THE SRS COMPONENTS OR THE SRS WIRING. WHEN YOU ARE PERFORMING SERVICE ON OR NEAR THE SRS COMPONENTS OR THE SRS WIRING, REFER TO THE SRS SERVICE INFORMATION. FAILURE TO FOLLOW WARNINGS COULD RESULT IN POSSIBLE AIR BAG DEPLOYMENT, PERSONAL INJURY, OR OTHERWISE UNNEEDED SRS SYSTEM REPAIRS.

CAUTION: Always use the correct fastener in the proper location. When you replace a fastener, use ONLY the exact part number for that application. ISUZU will call out those fasteners that require a replacement after removal. ISUZU will also call out the fasteners that require thread lockers or thread sealant. UNLESS OTHERWISE SPECIFIED, do not use supplemental coatings (Paints, greases, or other corrosion inhibitors) on threaded fasteners or fastener joint interfaces. Generally, such coatings adversely affect the fastener torque and the joint clamping force, and may damage the fastener. When you install fasteners, use the correct tightening sequence and specifications. Following these instructions can help you avoid damage to parts and systems.

General Description

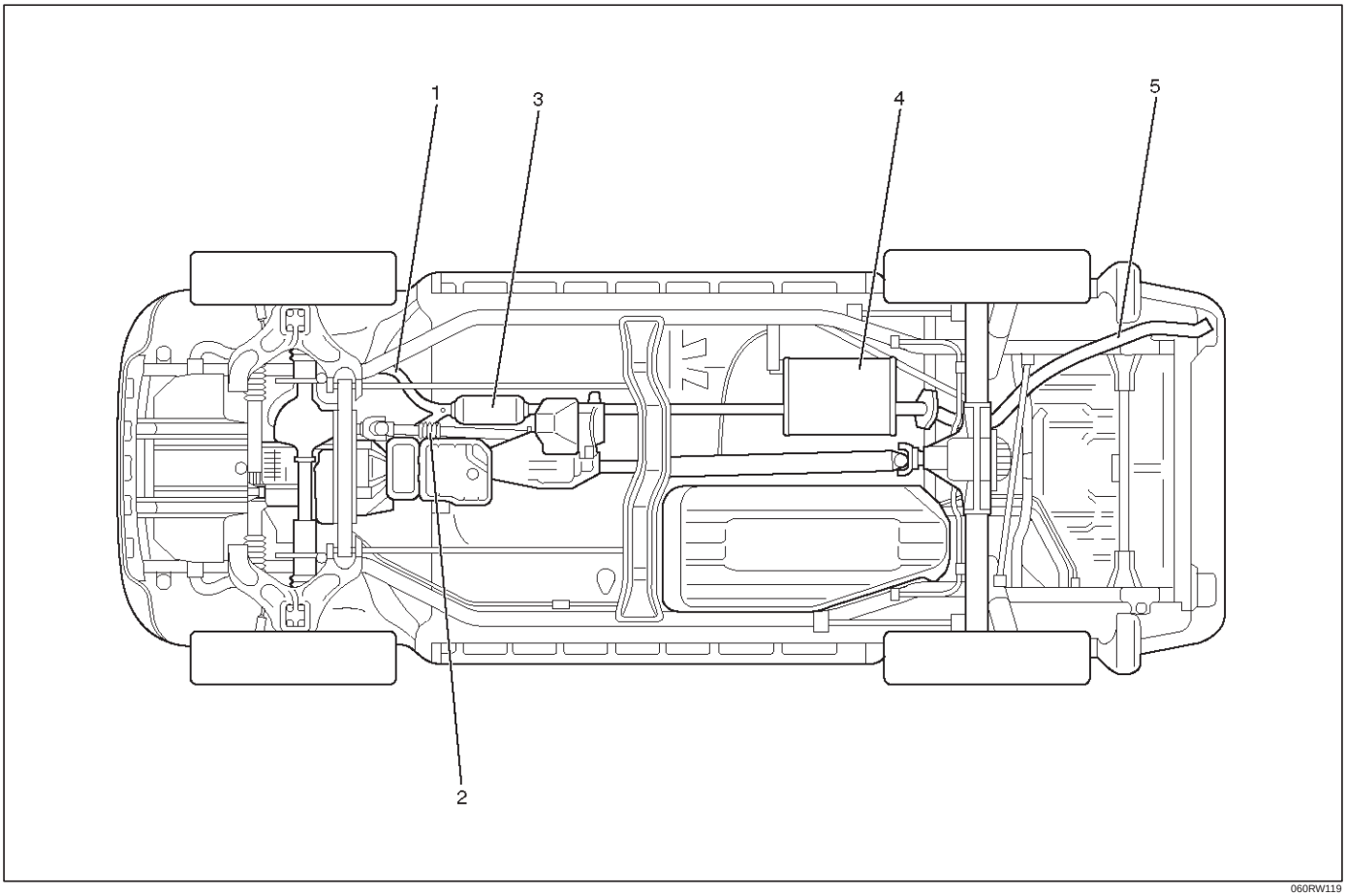

Legend

(1) Front Exhaust Pipe LH
(2) Front Exhaust Pipe RH
(3) Three Way Catalytic Converter
(4) Exhaust Silencer
(5) Rear Exhaust Pipe

When inspecting or replacing exhaust system components, make sure there is adequate clearance from all points on the underbody to prevent overheating the floor pan and possible damage to the passenger compartment insulation and trim materials.

Check complete exhaust system and nearby body areas and rear compartment lid for broken, damaged, missing or mispositioned parts, open seams, holes, loose connections or other deterioration which could permit exhaust fumes to seep into the rear compartment or passenger compartment. Dust or water in the rear compartment may be an indication of a problem in one of these areas. Any faulty areas should be corrected immediately.

Hangers

Various types of hangers are used to support exhaust system(s). These include conventional rubber straps, rubber rings, and rubber blocks.

The installation of exhaust system supports is very important, as improperly installed supports can cause annoying vibrations which can be difficult to diagnose.

Three Way Catalytic Converter

The three way catalytic converter is an emission control device added to the exhaust system to reduce pollutants from the exhaust gas stream.

CAUTION: The catalytic converter requires the use of unleaded fuel only.

Periodic maintenance of the exhaust system is not required. If the vehicle is raised for other service, it is advisable to check the condition of the complete exhaust system.

A dual bed monolith catalytic converter is used in combination with three way catalytic converter.

Catalytic Converter Types:

Three way (Reduction/Oxidation) catalyst

The catalyst coating on the three way (reduction) converter contains platinum and rhodium which lowers the levels of nitrous oxide (NOx) as well as hydrocarbons (HC) and carbon monoxide (Co).

Gasket

The gasket must be replaced whenever a new exhaust pipe, muffler or catalytic converter is installed.

Three Way Catalytic Converter and Forked Exhaust Pipe

Three Way Catalytic Converter and Front Exhaust Pipe and Associated Parts

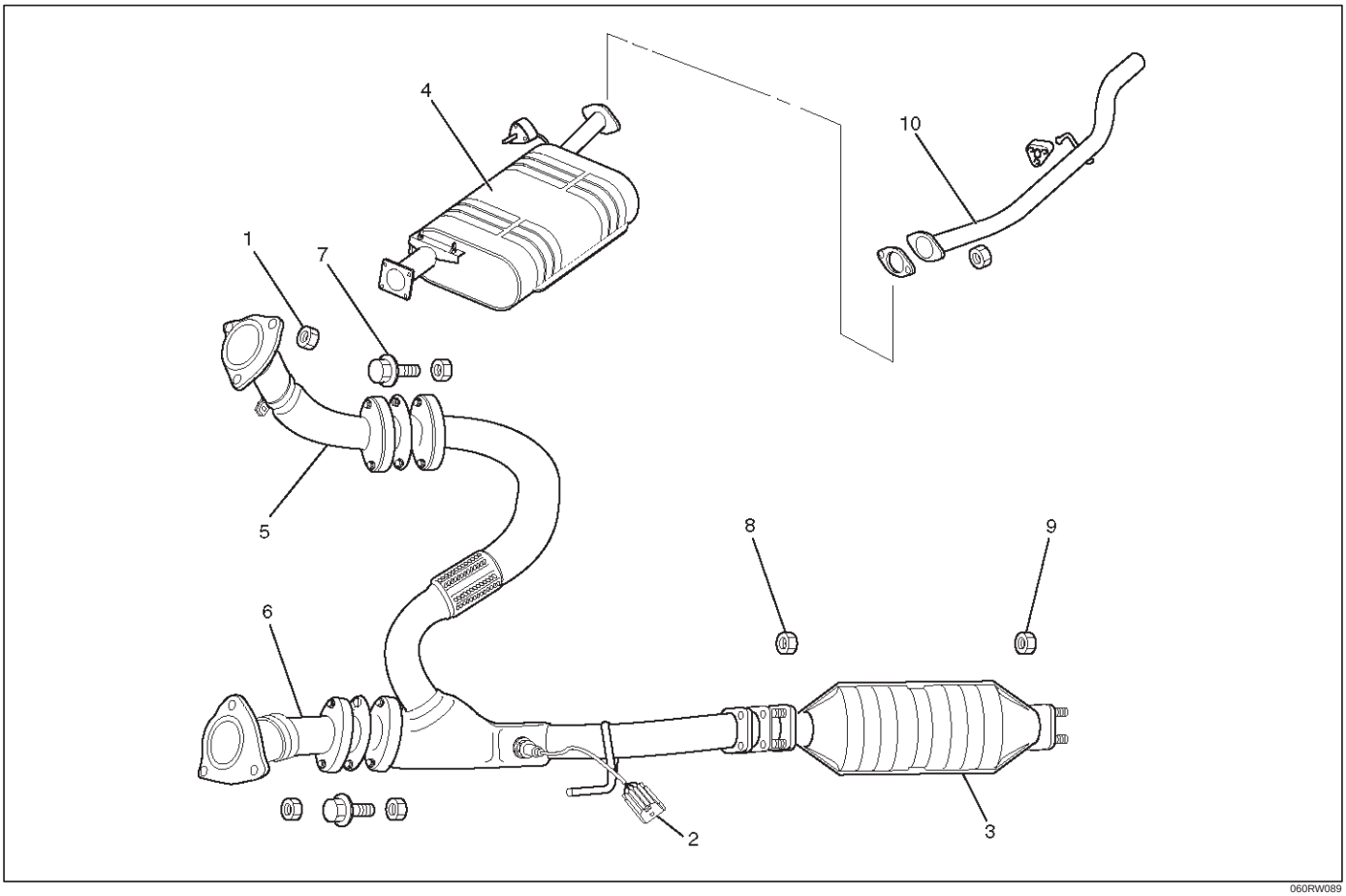

060RW089

Legend

(1) Front Exhaust Pipe Fixing Nuts
(2) O_2 Sensor
(3) Three Way Catalytic Converter
(4) Exhaust Silencer
(5) Front Exhaust Pipe RH
(6) Front Exhaust Pipe LH
(7) Exhaust Pipe Fixing Bolts
(8) Exhaust Pipe Fixing Nuts
(9) Exhaust Pipe Fixing Nuts
(10) Rear Exhaust Pipe

Removal

1. Disconnect battery ground cable.
2. Lift up the vehicle and support with suitable safety stands.
3. Disconnect O_2 sensor harness connectors (2).
4. Remove the forked exhaust pipe fixing bolts and nuts (7) (8) and the exhaust silencer fixing bolts (8), then remove the forked exhaust pipe and the mass damper.
5. Remove the three way catalytic converter fixing bolts (8) and the mounting rubber, then remove the three way catalytic converter (3).

Installation

1. Install the three way catalytic converter (3) and the mounting rubber, and tighten the fixing bolts (9) to the specified torque.

   Torque

   Nuts : 67 N·m (6.8 kg·m/49 lb ft)
2. Install the forked exhaust pipe and the mass damper, and tighten the fixing bolts (7) (8) to the specified torque.

   Torque

   Bolts&Nuts : 43 N·m (4.4 kg·m/32 lb ft)

   Nuts : 43 N·m (4.4 kg·m/32 lb ft)
3. Connect the O_2 sensor connectors (2).

Exhaust Silencer

Exhaust Silencer and Associated Parts

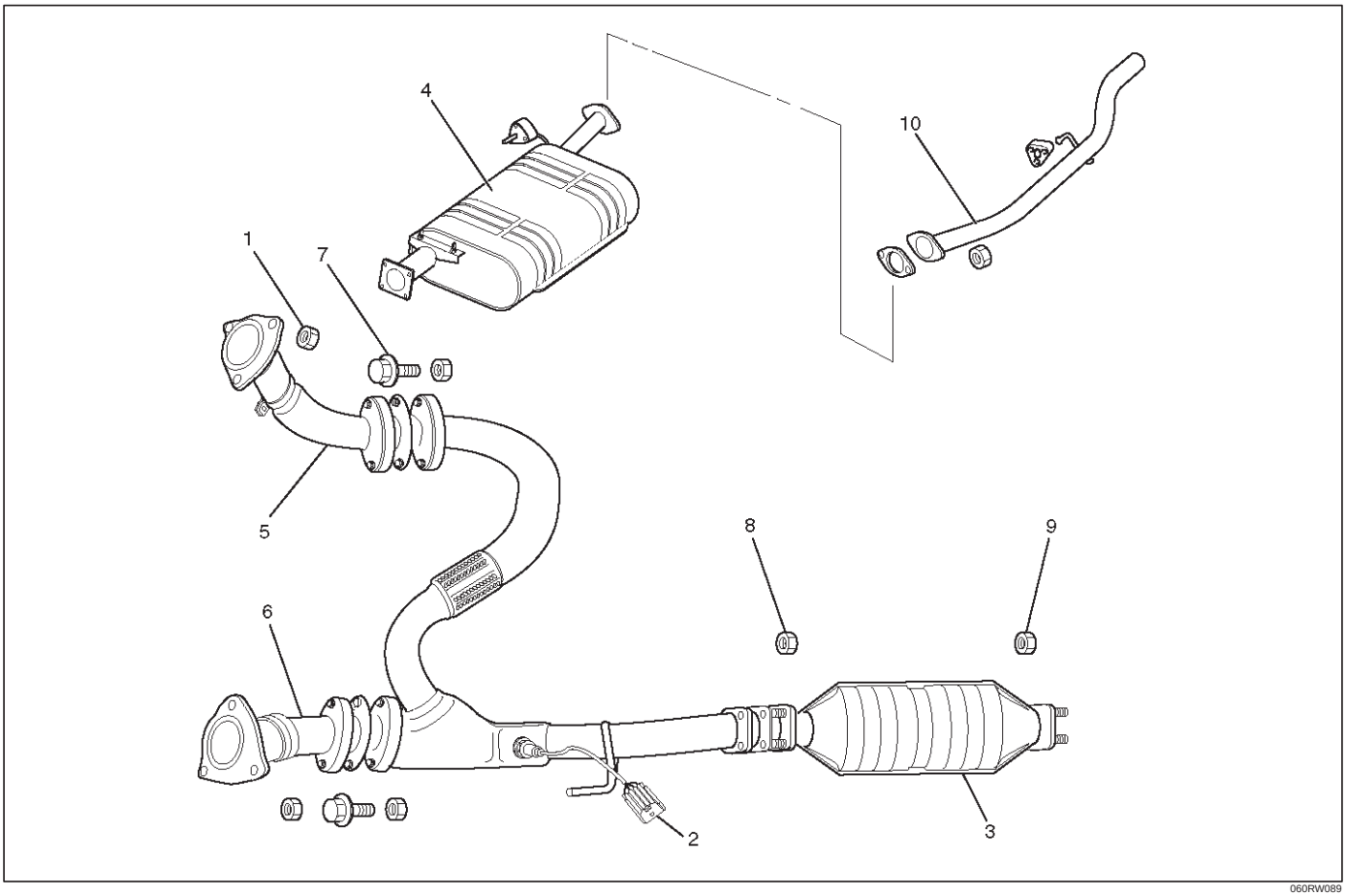

060RW089

Legend

(1) Front Exhaust Pipe Fixing Nuts
(2) O_2 Sensor
(3) Three Way Catalytic Converter
(4) Exhaust Silencer
(5) Front Exhaust Pipe RH
(6) Front Exhaust Pipe LH
(7) Exhaust Pipe Fixing Bolts
(8) Exhaust Pipe Fixing Nuts
(9) Exhaust Pipe Fixing Nuts
(10) Rear Exhaust Pipe

Removal

1. Disconnect battery ground cable.
2. Lift up the vehicle and support with suitable safety stands.
3. Remove the support rubber fixing nuts, the exhaust silencer fixing bolts (9) and rear exhaust pipe fixing nuts, then remove the exhaust silencer (4).

Installation

1. Install the exhaust silencer (4) and tighten the fixing nuts to the specified torque.

   Torque

   Nuts: 43 N·m (4.4 kg·m/32 lb ft)

2. Tighten the support rubber fixing nuts (2) to the specified torque.

   Torque

   Bolts: 15 N·m (1.5 kg·m/11 lb ft)

Rear Exhaust pipe

Rear Exhaust pipe and Associated Parts

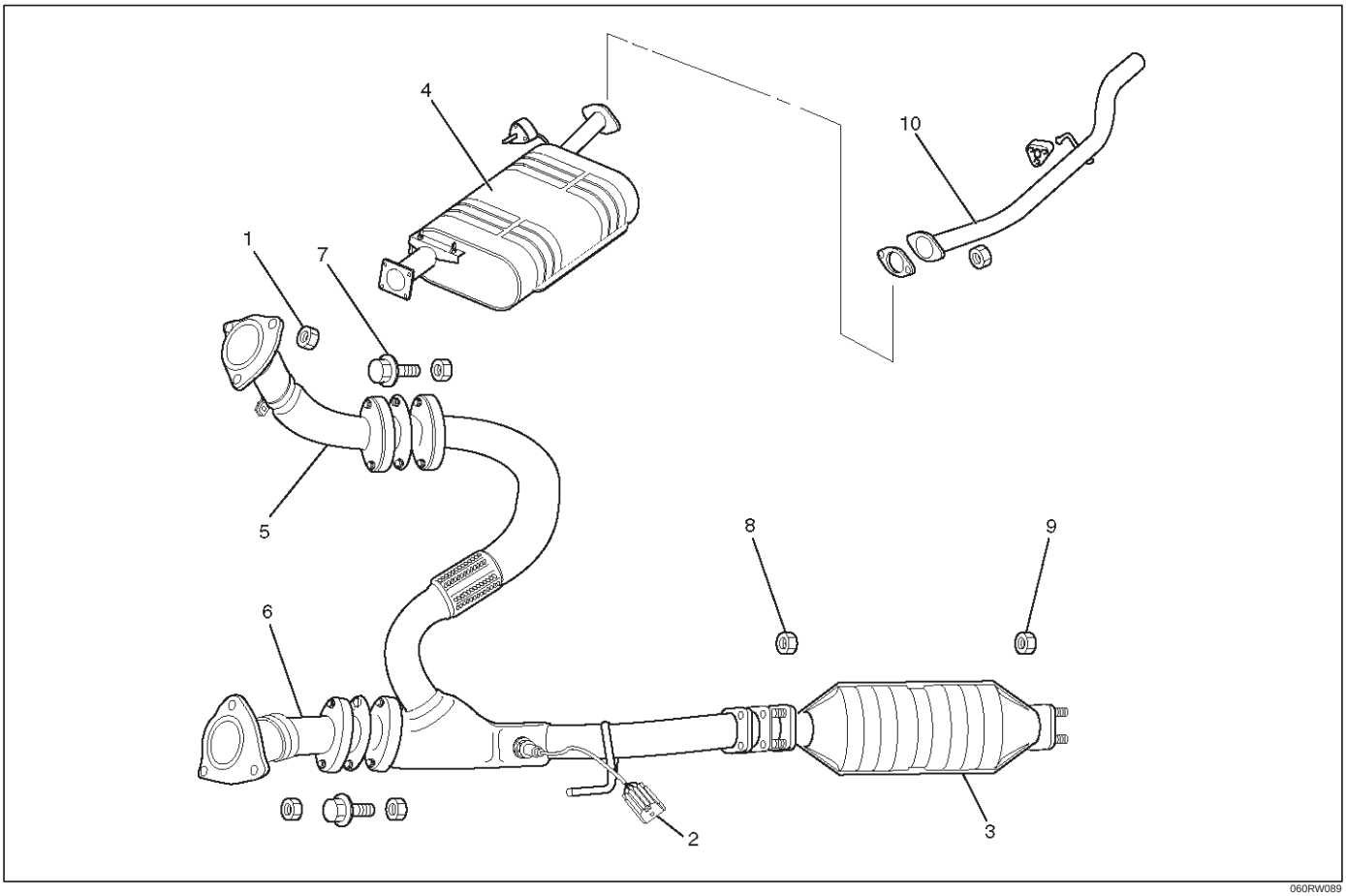

060RW089

Legend

(1) Front Exhaust Pipe Fixing Nuts
(2) O_2 Sensor
(3) Three Way Catalytic Converter
(4) Exhaust Silencer
(5) Front Exhaust Pipe RH
(6) Front Exhaust Pipe LH
(7) Exhaust Pipe Fixing Bolts
(8) Exhaust Pipe Fixing Nuts
(9) Exhaust Pipe Fixing Nuts
(10) Rear Exhaust Pipe

Removal

1. Disconnect battery ground cable.
2. Lift up the vehicle and support with suitable safety stands.
3. Remove the rear exhaust fixing nuts and the mounting rubbers, then remove the rear exhaust pipe (10).

Installation

1. Install the rear exhaust pipe (10) and the mounting rubbers (1) (3), then tighten the fixing nuts to the specified torque.

Torque

Nuts: 43 N·m (4.4 kg·m/32 lb ft)

Main Data and Specifications

Torque Specifications

N·m (kg·m/ lb·ft)

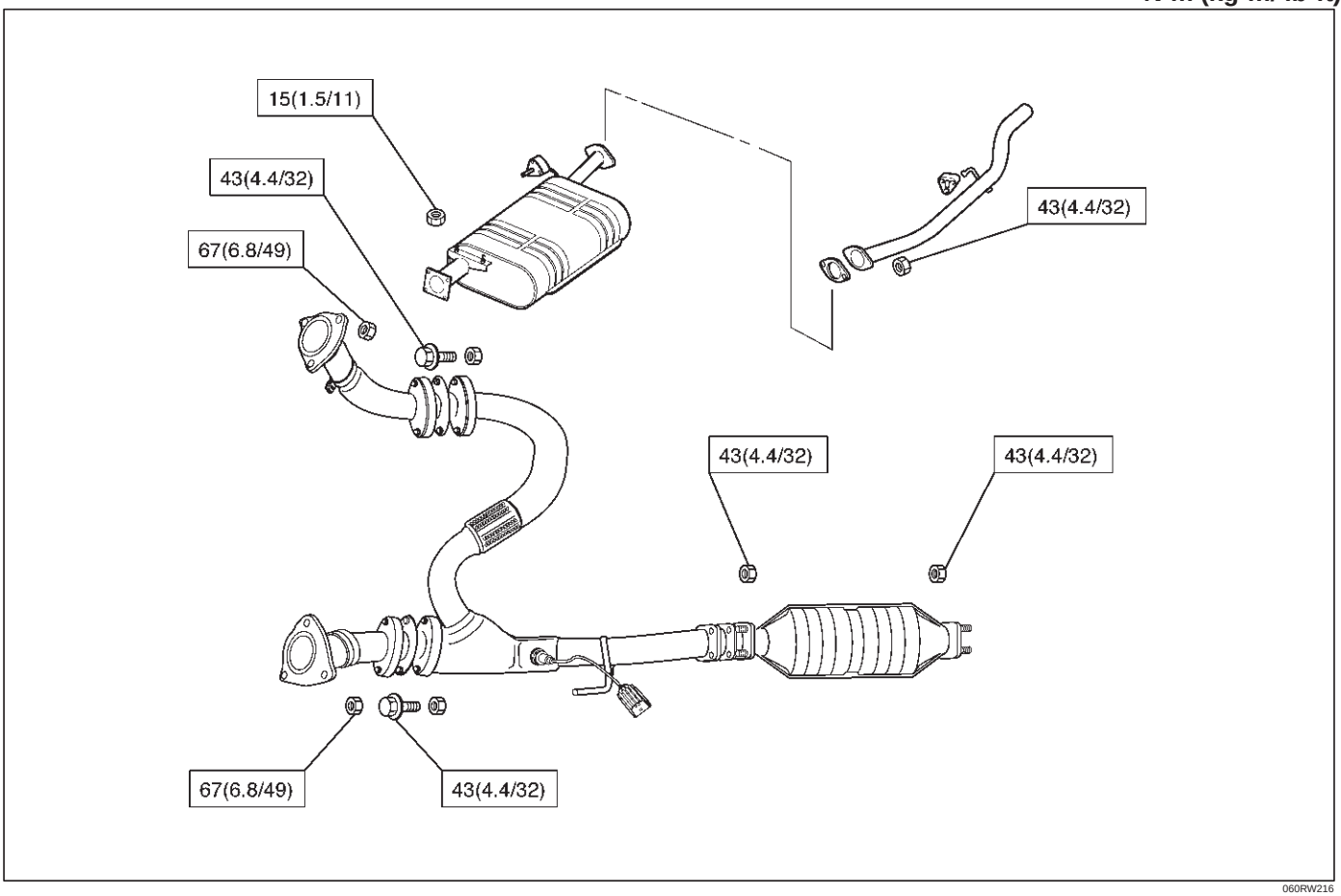

060RW216

ENGINE

ENGINE LUBRICATION (6VD1 3.2L)

CONTENTS

Service Precaution 6G–1
General Description 6G–2
Oil Pump 6G–3
Oil Pump and Associated Parts 6G–3
Disassembly 6G–3
Inspection and Repair 6G–4
Reassembly 6G–5
Oil Pan and Crankcase 6G–7
Removal 6G–7
Installation 6G–7
Oil Pump 6G–10
Removal 6G–10
Installation 6G–10
Oil Pump Oil Seal 6G–12
Removal 6G–12
Installation 6G–12
Main Data and Specification 6G–13

Service Precaution

WARNING: THIS VEHICLE HAS A SUPPLEMENTAL RESTRAINT SYSTEM (SRS). REFER TO THE SRS COMPONENT AND WIRING LOCATION VIEW IN ORDER TO DETERMINE WHETHER YOU ARE PERFORMING SERVICE ON OR NEAR THE SRS COMPONENTS OR THE SRS WIRING. WHEN YOU ARE PERFORMING SERVICE ON OR NEAR THE SRS COMPONENTS OR THE SRS WIRING, REFER TO THE SRS SERVICE INFORMATION. FAILURE TO FOLLOW WARNINGS COULD RESULT IN POSSIBLE AIR BAG DEPLOYMENT, PERSONAL INJURY, OR OTHERWISE UNNEEDED SRS SYSTEM REPAIRS.

CAUTION: Always use the correct fastener in the proper location. When you replace a fastener, use ONLY the exact part number for that application. ISUZU will call out those fasteners that require a replacement after removal. ISUZU will also call out the fasteners that require thread lockers or thread sealant. UNLESS OTHERWISE SPECIFIED, do not use supplemental coatings (Paints, greases, or other corrosion inhibitors) on threaded fasteners or fastener joint interfaces. Generally, such coatings adversely affect the fastener torque and the joint clamping force, and may damage the fastener. When you install fasteners, use the correct tightening sequence and specifications. Following these instructions can help you avoid damage to parts and systems.

General Description

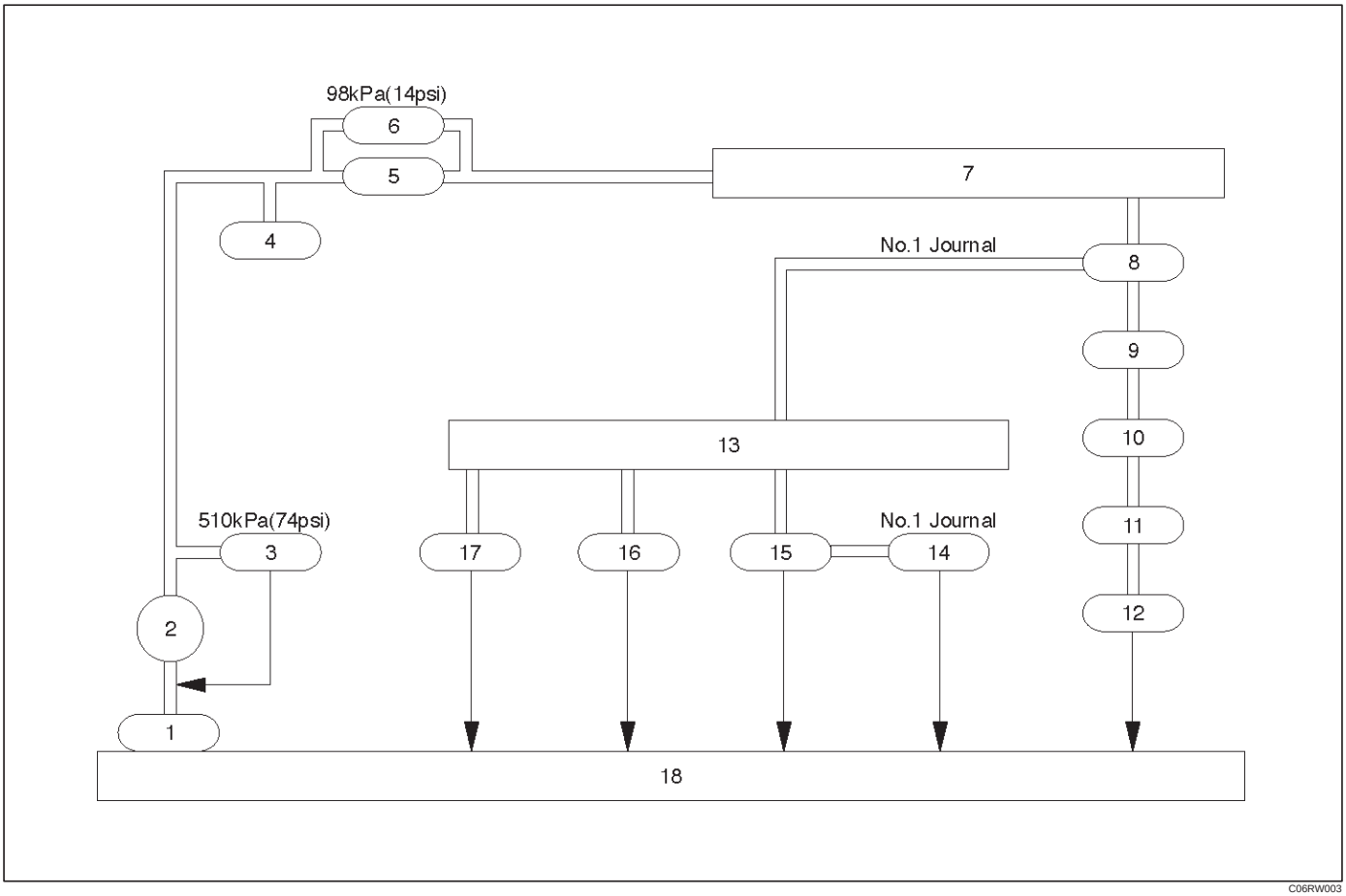

Legend

(1) Oil Strainer
(2) Oil Pump
(3) Relief Valve
(4) Oil Pressure Switch
(5) Oil Filter
(6) Safety Valve
(7) Oil Gallery
(8) Crankshaft Bearing
(9) Crankshaft
(10) Connecting Rod Bearing
(11) Connecting Rod
(12) Piston
(13) Oil Gallery; Cylinder Head
(14) Camshaft
(15) Camshaft Journal
(16) Front Journal; Camshaft Drive Gear
(17) Rear Journal; Camshaft Drive Gear
(18) Oil Pan

Oil Pump

Oil Pump and Associated Parts

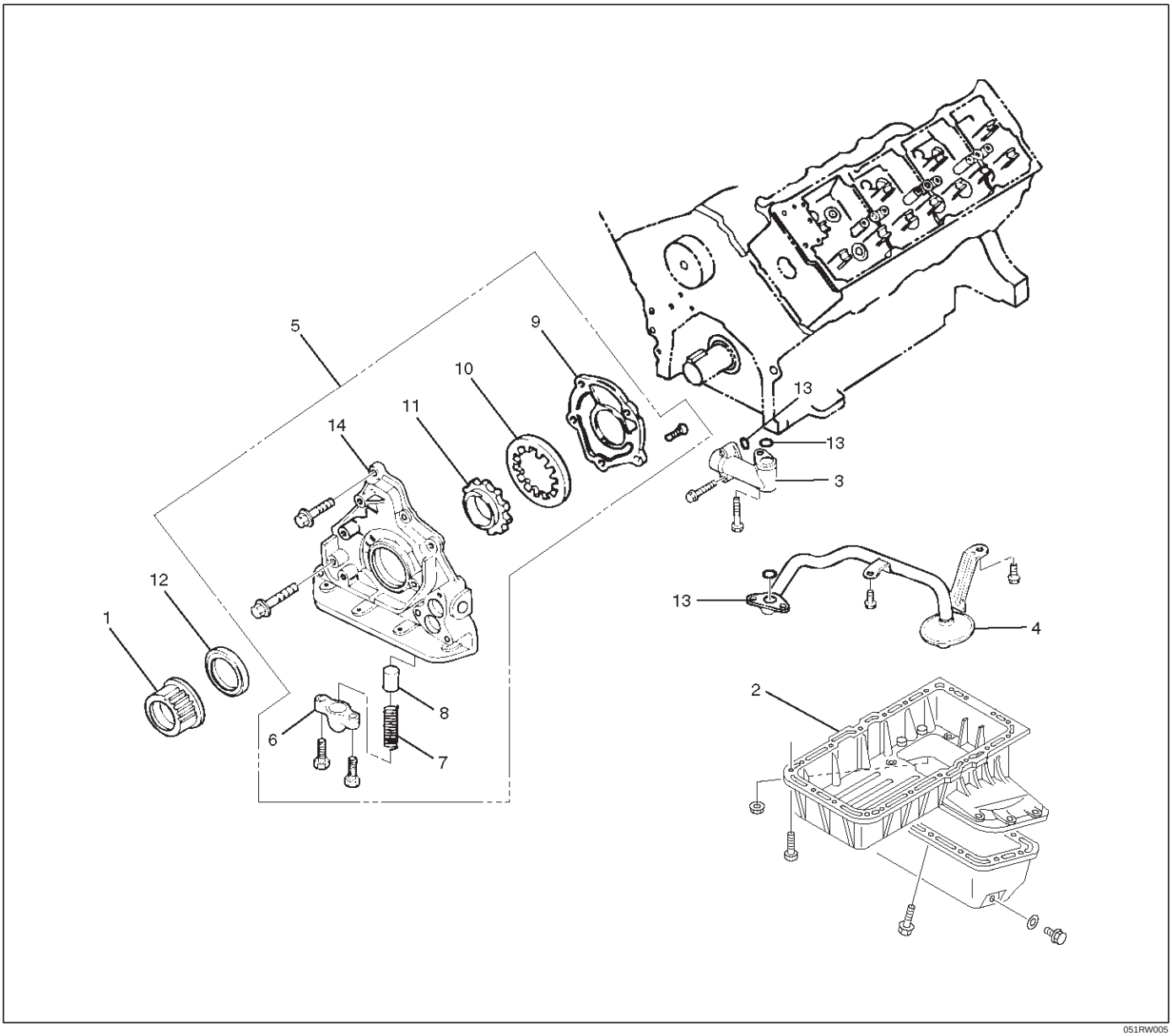

051RW005

Legend

(1) Crankshaft Timing Pulley
(2) Crankcase with Oil Pan
(3) Oil Pipe
(4) Oil Strainer
(5) Oil Pump Assembly
(6) Plug
(7) Spring
(8) Relief Valve
(9) Oil Pump Cover
(10) Driven Gear
(11) Drive Gear
(12) Oil Seal
(13) O-ring
(14) Oil Pump Body

Disassembly

1. Remove crankshaft timing pulley.
2. Remove crankcase with oil pan.
3. Remove oil pipe.
4. Remove oil strainer.
5. Remove oil pump assembly.
6. Remove plug.
7. Remove spring.
8. Remove relief valve.
9. Remove oil pump cover.
10. Remove driven gear.

11. Remove drive gear.
12. Remove oil seal.
13. Remove O-ring.

Inspection and Repair

CAUTION: Make necessary correction or parts replacement if wear, damage or any other abnormal conditions are found during inspection.

Relief Valve (8)

- Check to see that the relief valve slides freely.
- The oil pump must be replaced if the relief valve does not slide freely.
- Replace the spring and/or the oil pump assembly (5) if the spring is damaged or badly worn.

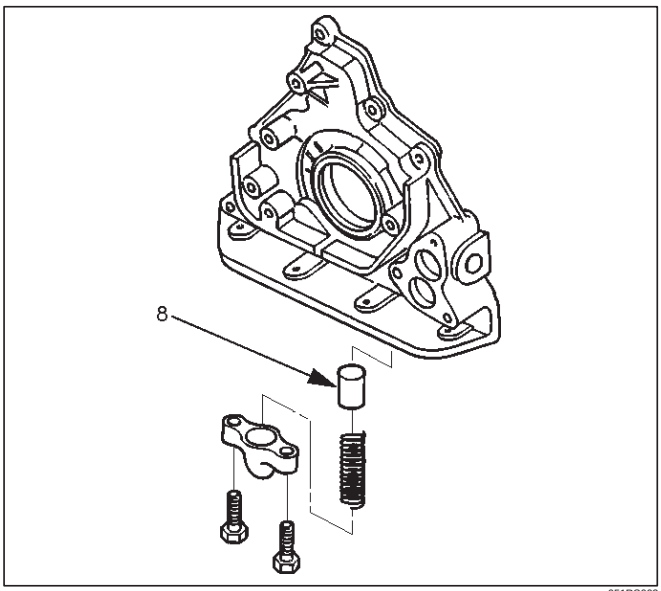

051RS002

Body (14) and Gears (10, 11)

The pump assembly must be replaced if one or more of the conditions below is discovered during inspection.

- Badly worn or damaged driven gear (10).
- Badly worn drive gear (11) driving face.
- Badly scratched or scored body sliding face (14) or driven gear (10).
- Badly worn or damaged gear teeth.

Measure the clearance between the body and the driven gear with a feeler gauge.

Standard : 0.10 mm–0.18 mm (0.0039 in.–0.0070 in)

Limit : 0.20mm (0.0079 in)

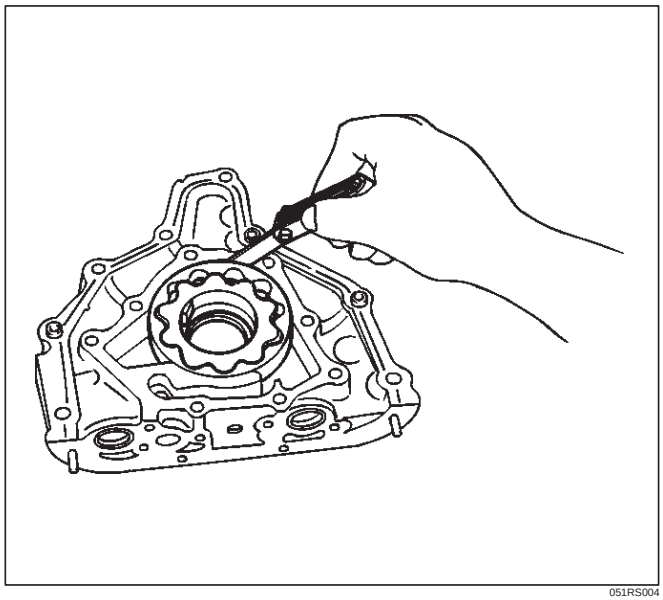

051RS004

- Measure the clearance between the drive gear and driven gear with a feeler gauge.

Standard : 0.11 mm–0.24 mm (0.0043 in–0.0094 in)

Limit : 0.35mm (0.0138 in)

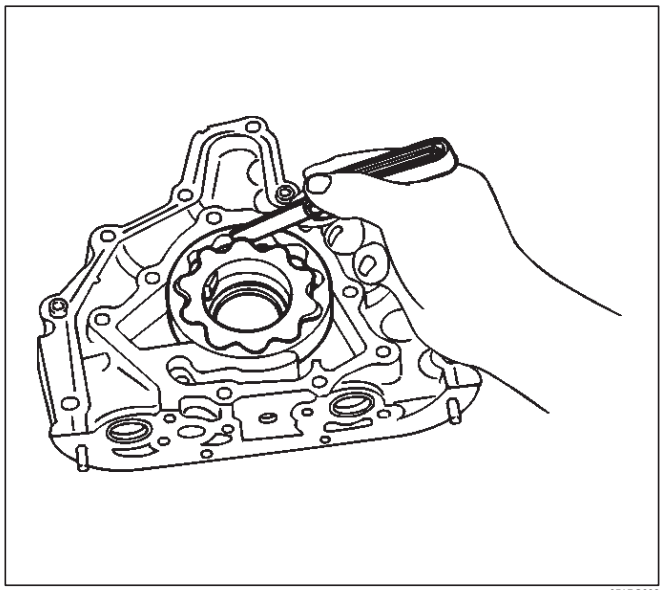

051RS003

- Measure the side clearance with a precision straight edge and a feeler gauge.

Clearance

Standard : 0.03 mm–0.09 mm (0.0011 in–0.0035 in)

Limit : 0.15mm (0.0059 in)

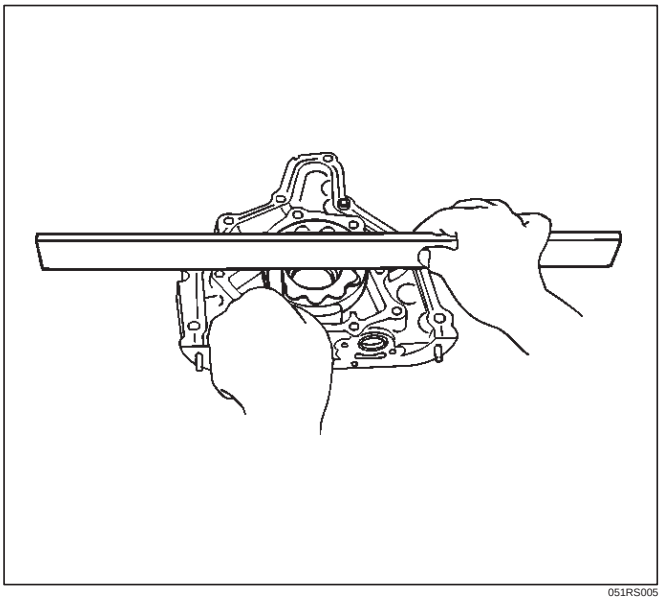

051RS005

Oil Strainer

Check the oil strainer for cracking and scoring. If cracking and scoring are found, the oil strainer must be replaced.

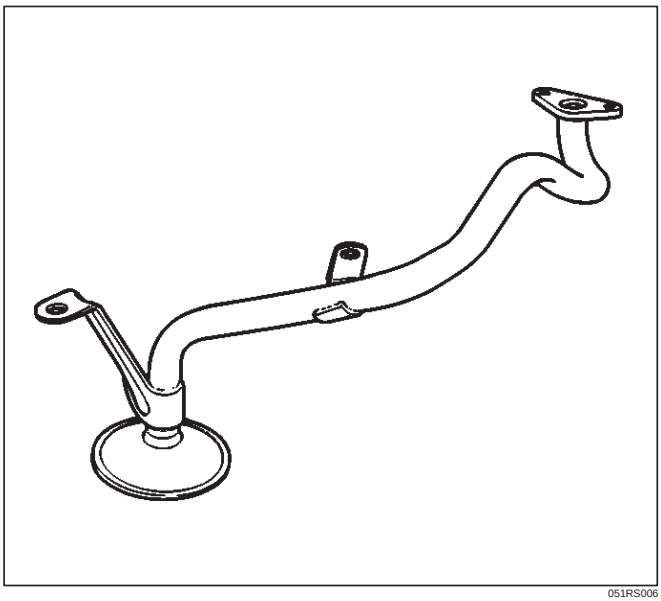

051RS006

Reassembly

1. Install drive gear (11).
2. Install driven gear (10).
3. Install oil pump cover (9) and first, loosely tighten all of the attaching screws. Next, tighten the attaching screws to the specified torque.

   Torque : 10 N·m (1.0 kg·m/89 lb in)

   After installation, check that the gear rotates smoothly.
4. Install relief valve (8) and apply engine oil to the relief valve and spring (7).
5. Install spring (7).
6. Install the plug (6).

   Torque : 8 N·m (0.8 kg·m/69 lb in)

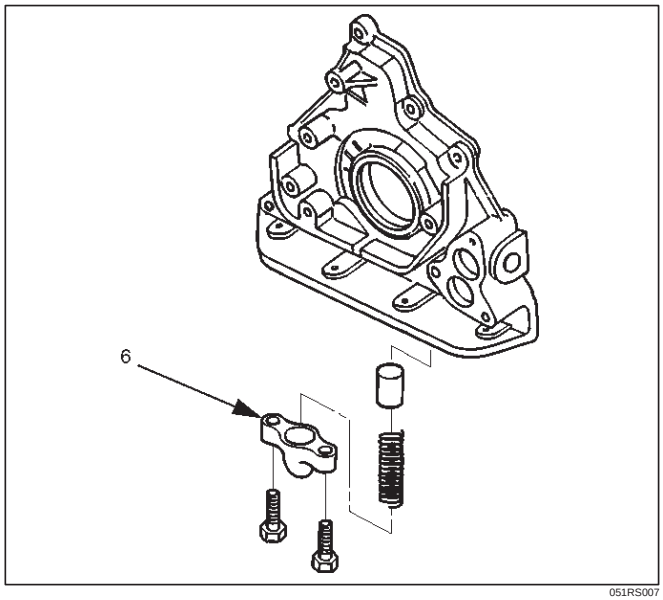

051RS007

7. Install oil pump assembly (5).
   - Carefully remove any oil from the cylinder body and the pump. Apply sealant (TB–1207B or equivalent) to the pump fitting face as shown in illustration. Take care that sealant is not applied to oil port surfaces. The oil pump assembly must be installed within 5 minutes after sealant application to prevent premature hardening of sealant.

CAUTION: Do not apply an excessive amount of sealant to the contact surface. Applying too much sealant will overflow the contact surfaces. This could cause serious damage to the engine.

- **Attach oil pump assembly to cylinder body.**
- **Tighten the oil pump fixing bolts.**

  Torque : 25 N·m (2.6 kg·m/18 lb·ft)

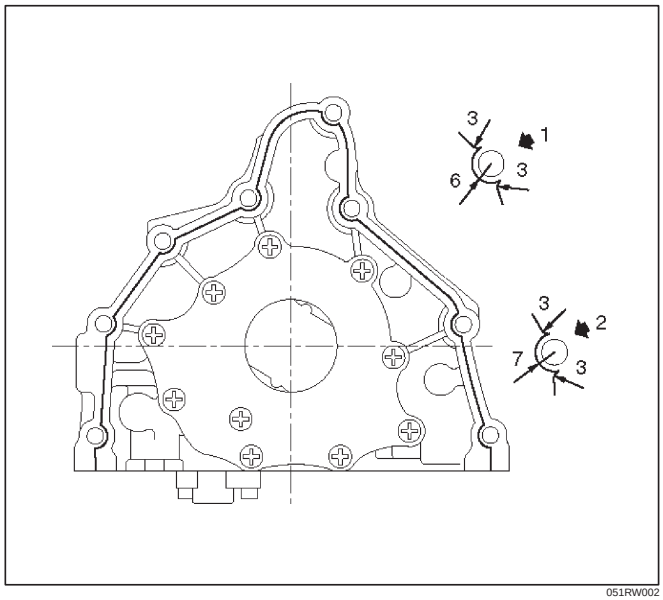

051RW002

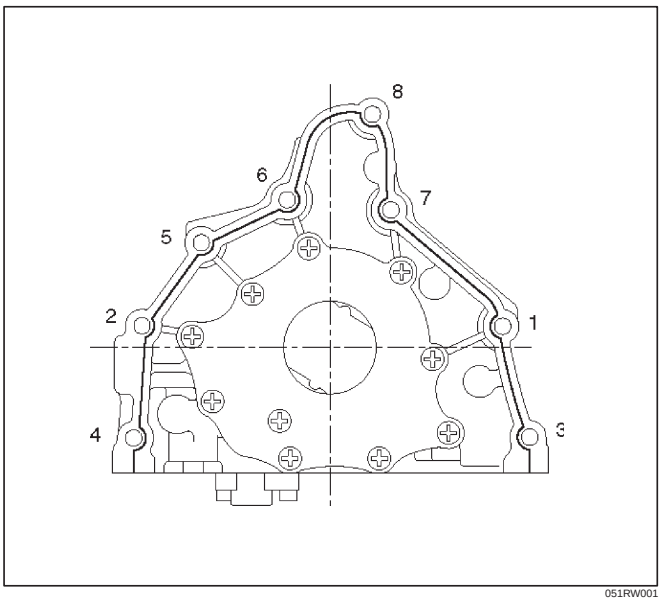

051RW001

Legend

(1) Around Bolt Holes
(2) Around Dowel Pin

8. Install the new oil seal (12). Apply engine oil to the oil seal lip before installation then use 5–8840–2287–0 oil seal Installer, install oil seal.

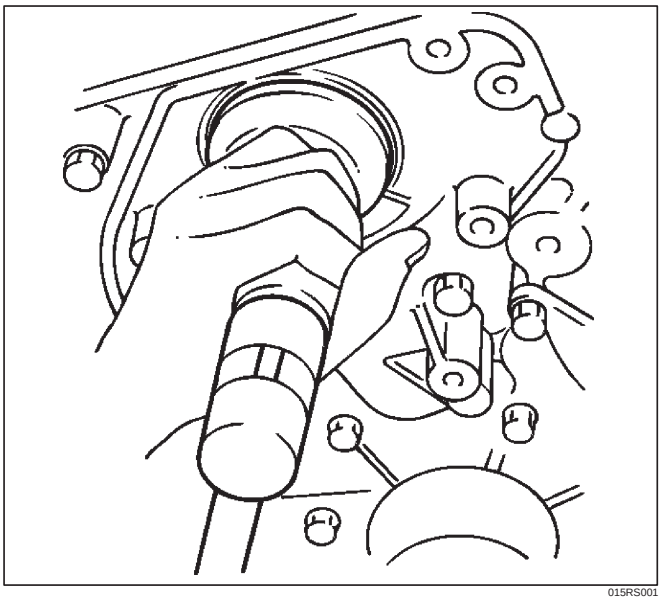

015RS001

9. Install oil strainer (4) with O-ring (13).

   Torque: 25 N·m (2.6 kg·m/18 lb ft)

10. Install oil pipe (3) with O-ring (13).

    Torque: 25 N·m (2.6 kg·m/18 lb ft)

11. Install crankcase with oil pan (2).
    - Remove oil on crankcase mounting surface and dry the surface.
    - Apply a proper 4.5 mm (0.7 in) wide bead of sealant (TB1207C or equivalent) to the crankcase mounting surface. The bead must be continuous.
    - The crankcase must be installed within 5 minutes after sealant application to prevent premature hardening of sealant.
    - Tighten fixing bolts to the specified torque.

    Torque : 10 N·m (1.0 kg·m/89 lb in)

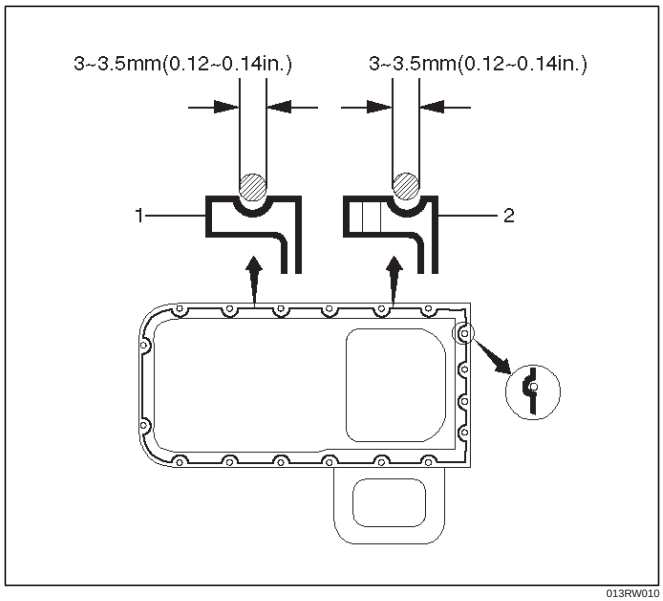

013RW010

12. Install crankshaft timing pulley.

Oil Pan and Crankcase

Removal

1. Disconnect battery ground cable.
2. Drain engine oil.
3. Lift vehicle by supporting the frame.
4. Remove front wheels.
5. Remove oil level dipstick from level gauge tube.
6. Remove stone guard.
7. Remove radiator under fan shroud.
8. Remove suspension cross member fixing bolts, 2 pcs each per side and remove suspension cross member.
9. Remove pitman arm and relay lever assembly, using the 5–8840–2005–0 remover, remove pitman arm from the steering unit and remove four fixing bolts for relay lever assembly.
10. Remove axle housing assembly four fixing bolts from housing isolator side and mounting bolts from wheel side. At this time support the axle with a garage jack and remove axle housing assembly.
11. Remove oil pan fixing bolts.
12. Remove oil pan, using 5–8840–2153–0 sealer cutter, remove oil pan.

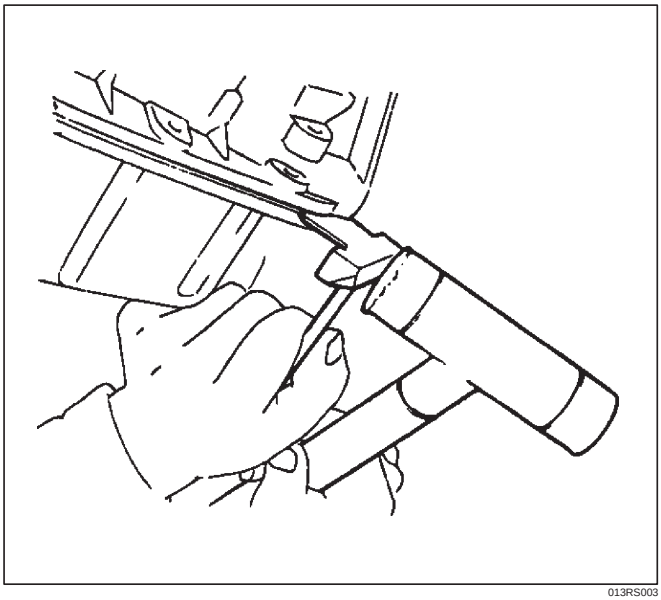

013RS003

13. Remove crankcase fixing bolts.
14. Remove crankcase, using 5–8840–2153–0 sealer cutter, remove crankcase.

NOTE: Do not deform or damage the flange of oil pan and crankcase.

Replace the oil pan and/or crankcase if deformed or damaged.

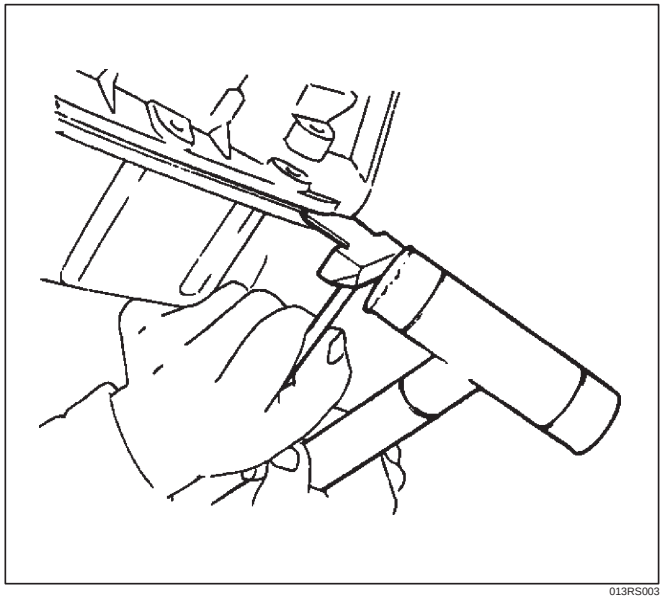

013RS003

Installation

1. Install crankcase.
   1. Remove residual sealant, lubricant and moisture from mounting surface, then dry thoroughly.
   2. Properly apply a 4.5 mm (0.7 in) wide bead of sealant (TB-1207C or equivalent) to mounting surface of crankcase.

      Sealant beat must be continuous.
      - The crankcase must be installed within 5 minutes after sealant application before the sealant hardens.

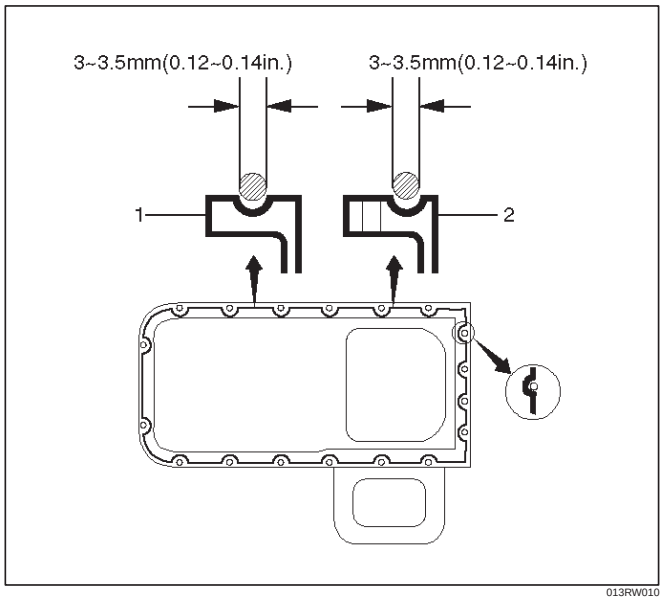

013RW010

3. Install crankcase, tighten crankcase fixing bolts to the specified torque.

Torque : 10 N·m (1.0 kg·m/89 lb in)

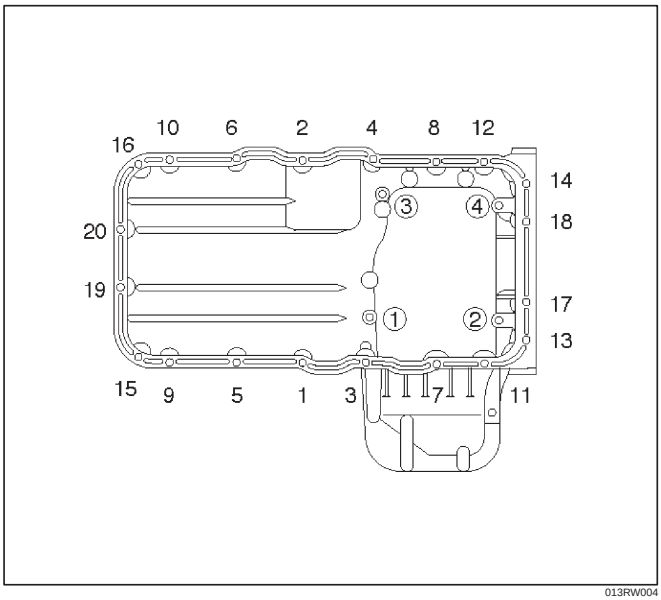

013RW004

2. Install oil pan
   1. Remove residual sealant, lubricant and moisture from mounting surface, then dry thoroughly.
   2. Properly apply a 4.5 mm (07 in) wide bead of sealant (TB-1207C or equivalent) to mounting surface of oil pan.

      Sealant beat must be continuous.
      - The crankcase must be installed within 5 minutes after sealant application befor the sealant hardens.

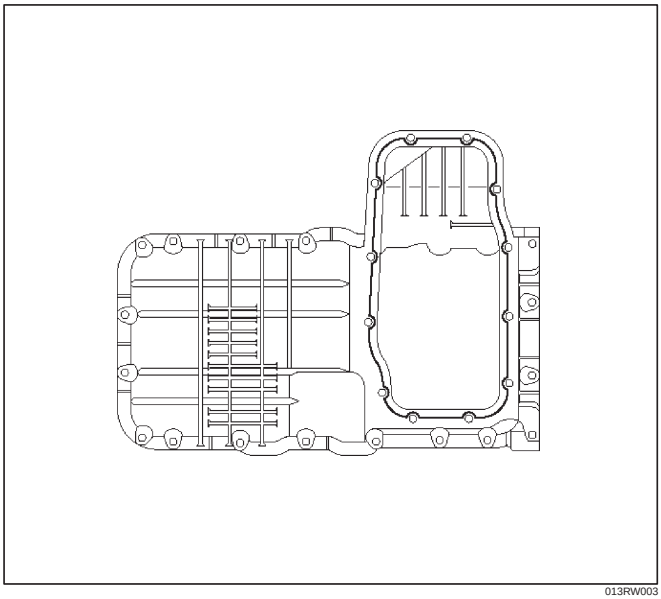

013RW003

3. Install oil pan, tighten oil pan fixing bolts to the specified torque.

Torque : 25 N·m (2.5 kg·m/18 lb ft)

3. Install axle housing assembly and tighten fixing bolts to the specified torque.

Axle case bolts

Torque : 82 N·m (8.4 kg·m/60 lb ft)

Mounting bolts

Torque : 152 N·m (15.5 kg·m/112 lb ft)

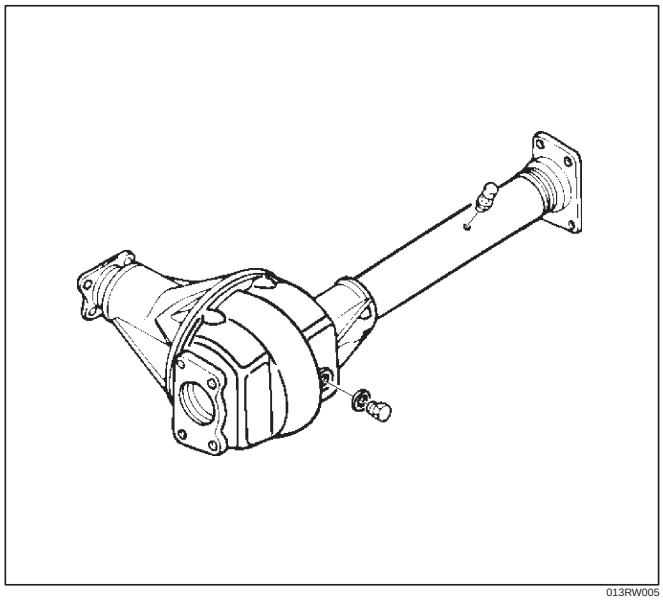

013RW005

4. Install relay lever assembly and tighten fixing bolts.

Torque: 44 N·m (4.5 kg·m/32 lb ft)

5. Engage teeth of pitman arm and steering unit, and tighten nut to the specified torque.

Torque : 216 N·m (22.0 kg·m/159 lb ft)

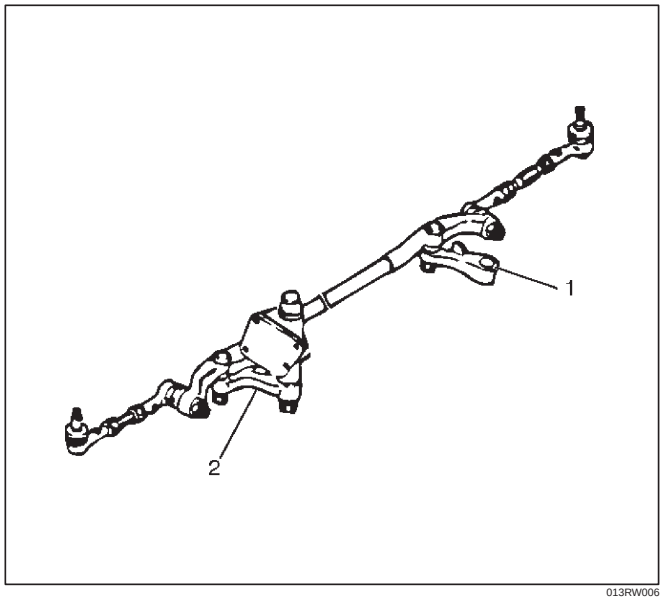

013RW006

Legend

(1) Pitman Arm
(2) Relay Lever

6. Install suspension cross member and tighten fixing bolts to the specified torque.

Torque : 78 N·m (8.0 kg·m/58 lb ft)

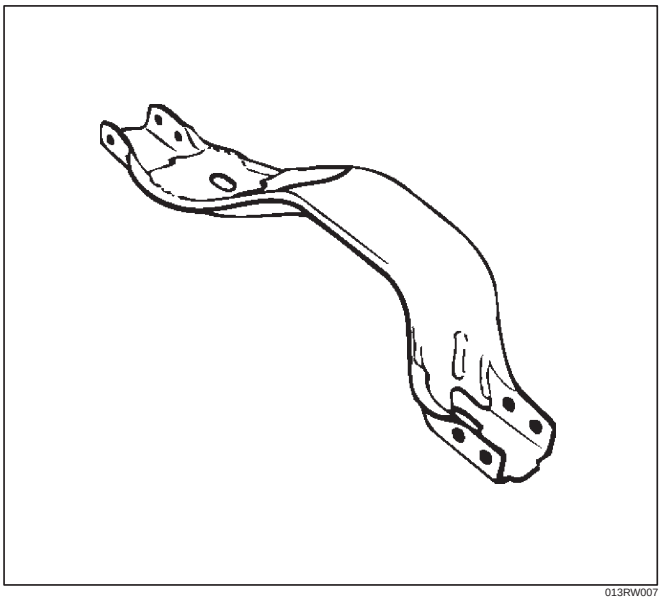

013RW007

7. Install radiator under fan shroud.
8. Install stone guard.
9. Install engine oil level dipstick.
10. Fill engine oil until full level on engine oil gauge dipstick.

Oil Pump

Removal

1. Disconnect battery ground cable.
2. Drain engine oil.
3. Remove crankcase assembly.
   - Refer to removal procedure for Oil Pan and Crankcase in this manual.
4. Remove crankshaft pulley.
   - Refer to removal procedure for Crankshaft Pulley in this manual.
5. Remove timing belt.
   - Refer to removal procedure for Timing Belt in this manual.
6. Remove timing pulley from crankshaft.
7. Remove four fixing bolts from oil filter assembly.
8. Remove oil strainer fixing bolts, remove oil strainer assembly with O-ring.
9. Remove three bolts from oil pipe and O-ring.
10. Remove eight oil pump fixing bolts, then oil pump assembly.
11. Remove sealant from mounting surface of oil pump assembly, cylinder block and take care not to damage mounting surfaces of oil pump and cylinder block.

Installation

1. Install oil pump assembly
   - Apply sealant (TB-1207B or equivalent) to the oil pump mounting surfaces as shown in the illustration.
   - The oil pump assembly must be installed within 5 minutes after sealant application before the sealant hardens.

NOTE: Do not apply sealant to the oil ports.

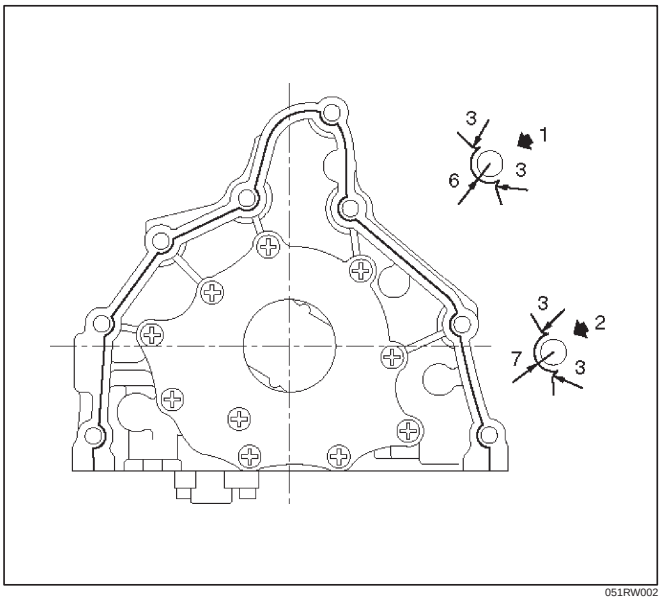

051RW002

- Use 5–8840–2287–0 installer when installing new oil seal.
- Apply engine oil to oil seal lip.
- Install oil pump assembly to the cylinder block.

NOTE: Do not damage oil seal during installation of oil pump assembly.

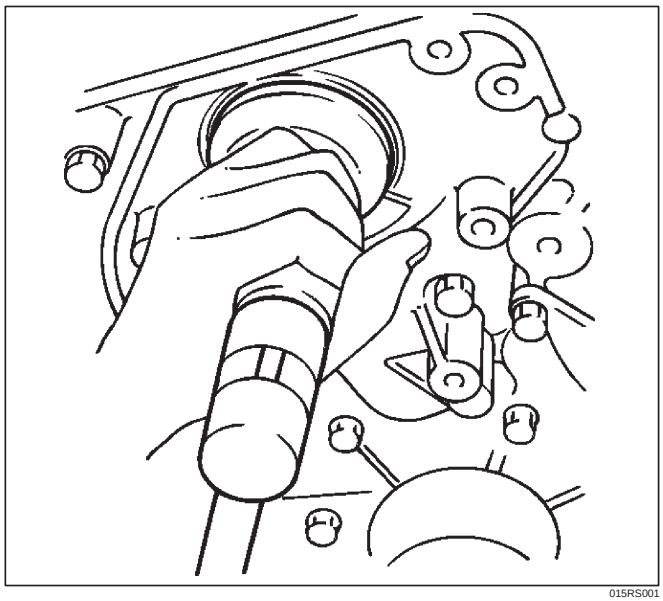

015RS001

- Tighten fixing bolts to the specified torque.

Torque : 25 N·m (2.5 kg·m/18 lb ft)

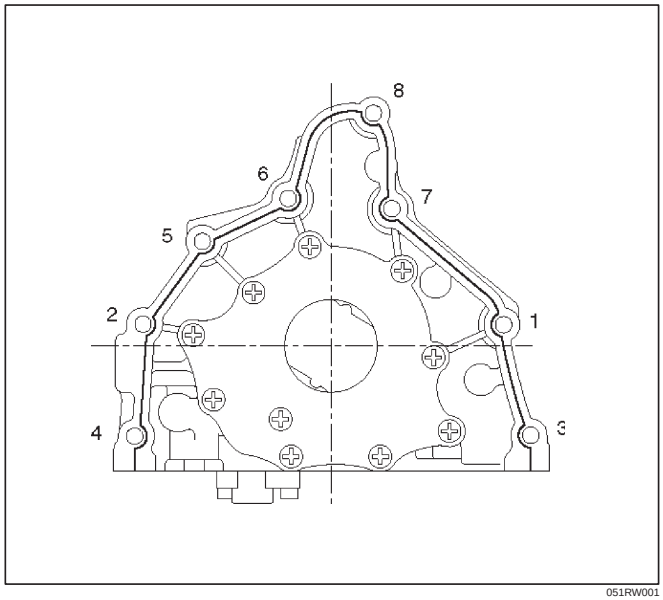

051RW001

2. Install oil pipe with O-ring, tighten fixing bolt to the specified torque.

   Torque : 10 N·m (1.0 kg·m/89 lb in)

3. Install oil strainer with O-ring, tighten fixing bolt to the specified torque.

   Torque : 25 N·m (2.5 kg·m/18 lb ft)

4. Install oil filter assembly and tighten bolts to the specified torque.

Torque : 25 N·m (2.5 kg·m/18 lb ft)

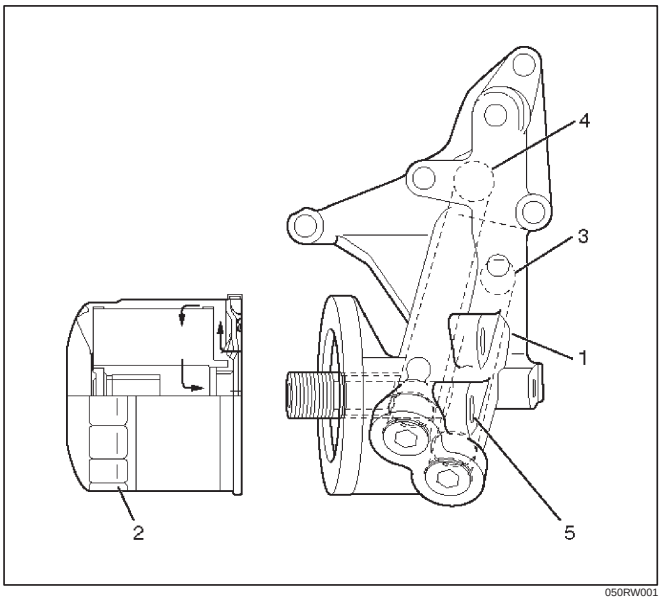

050RW001

Legend

(1) Oil Pump
(2) Oil Filter
(3) Oil Gallery
(4) From Oil Filter
(5) To Oil Filter

5. Install timing pulley on crankshaft.
   Install timing belt.
   - Refer to installation procedure for Timing Belt in this manual.
6. Install crankshaft pulley.
   - Refer to install procedure for Crankshaft Pulley in this manual.
7. Install crankcase assembly.
   - Refer to installation procedure for Oil Pan and Crankcase in this manual.
8. Refill engine oil until full level on engine oil dipstick.

Oil Pump Oil Seal

Removal

1. Disconnect battery ground cable.
2. Drain engine oil.
3. Remove crankshaft pulley.
   - Refer to removal procedure for Crankshaft Pulley in this manual.
4. Remove timing belt.
   - Refer to removal procedure for Timing Belt in this manual.
5. Remove timing pulley from crankshaft.
6. Remove oil pump oil seal using a sealer puller.

NOTE: Take care not to damage sealing surfaces of oil pump and crankshaft when removing oil seal.

Installation

1. Install oil pump oil seal, apply engine oil to oil seal lip, then install oil seal using 5–8840–2287–0 installer.

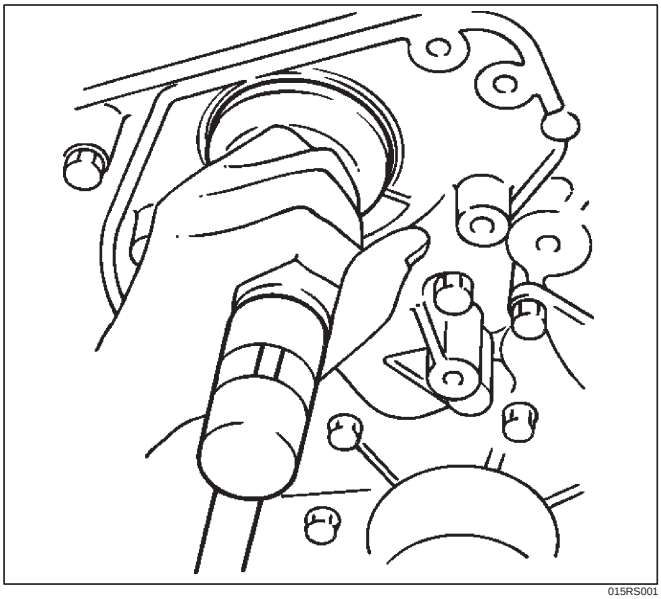

015RS001

2. Install timing pulley to crankshaft.
3. Install timing belt.
   - Refer to installation procedure for Timing Belt in this manual.
4. Install crankshaft pulley.
   - Refer to installation procedure for Crankshaft Pulley in this manual.
5. Refill engine oil until full level.

Main Data and Specification

General Specification

Item	Specifications
	6VD1
Oil capacity	5.3 liters

Torque Specifications

Crankcase, Oil pan, Timing belt tensioner, Timing pulley, timing belt cover, Oil pump, Oil gallery, Oil strainer

N·m (kg·m/ lb·ft)

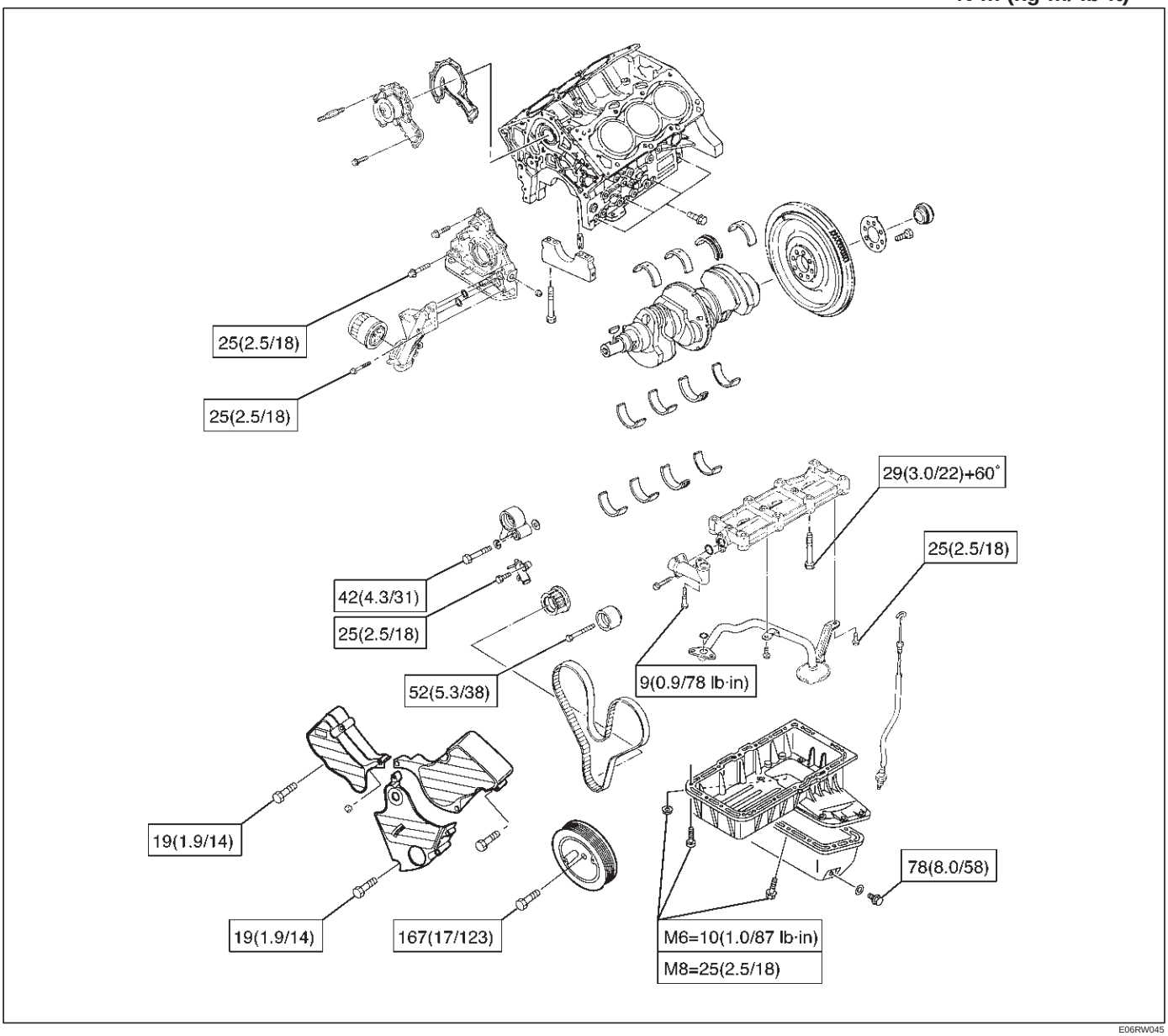

E06RW045

ENGINE

ENGINE SPEED CONTROL SYSTEM (6VD1 3.2L)

CONTENTS

Service Precaution 6H–1
Accelerator Pedal Control Cable 6H–2
Removal 6H–2
Inspection 6H–2
Installation 6H–2
Accelerator Pedal 6H–3
Accelerator Pedal and Associated Parts . . 6H–3
Removal 6H–3
Installation 6H–3

Service Precaution

WARNING: THIS VEHICLE HAS A SUPPLEMENTAL RESTRAINT SYSTEM (SRS). REFER TO THE SRS COMPONENT AND WIRING LOCATION VIEW IN ORDER TO DETERMINE WHETHER YOU ARE PERFORMING SERVICE ON OR NEAR THE SRS COMPONENTS OR THE SRS WIRING. WHEN YOU ARE PERFORMING SERVICE ON OR NEAR THE SRS COMPONENTS OR THE SRS WIRING, REFER TO THE SRS SERVICE INFORMATION. FAILURE TO FOLLOW WARNINGS COULD RESULT IN POSSIBLE AIR BAG DEPLOYMENT, PERSONAL INJURY, OR OTHERWISE UNNEEDED SRS SYSTEM REPAIRS.

CAUTION: Always use the correct fastener in the proper location. When you replace a fastener, use ONLY the exact part number for that application. ISUZU will call out those fasteners that require a replacement after removal. ISUZU will also call out the fasteners that require thread lockers or thread sealant. UNLESS OTHERWISE SPECIFIED, do not use supplemental coatings (Paints, greases, or other corrosion inhibitors) on threaded fasteners or fastener joint interfaces. Generally, such coatings adversely affect the fastener torque and the joint clamping force, and may damage the fastener. When you install fasteners, use the correct tightening sequence and specifications. Following these instructions can help you avoid damage to parts and systems.

Accelerator Pedal Control Cable

Removal

1. Loosen the nut(5) on the cable bracket mounted on the common chamber.
2. Remove cable clip(3).
3. Disconnect accelerator pedal (AP) control cable(6). (on throttle valve side)
4. Disconnect AP control cable(1). (on AP pedal(7) side)
5. Remove molding cap(2).
6. Remove AP control cable(4).

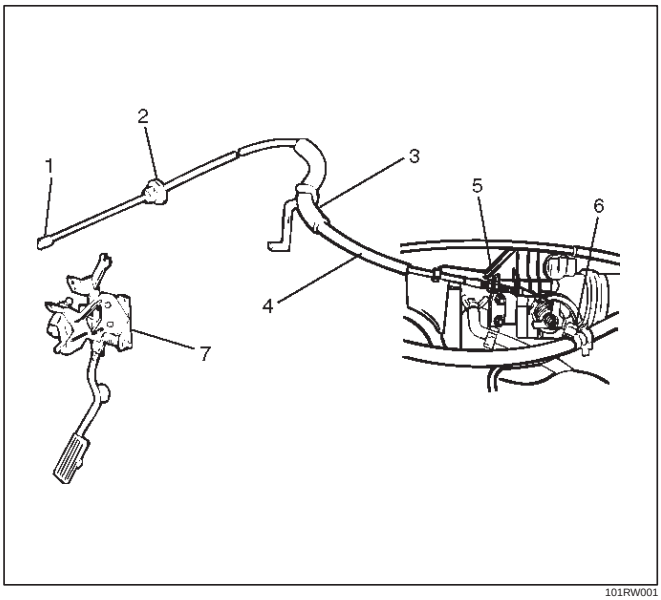

101RW001

Inspection

Check the following items, and replace the control cable if any abnormality is found:

- The control cable should move smoothly.
- The control cable should not be bent or kinked.
- The control cable should be free of damage and corrosion.

Installation

1. Install AP control cable(4).
2. Install molding cap(2).
3. Connect AP control cable(1). (on AP side)
4. Connect AP control cable(6). (on throttle valve side)
5. Install cable clip(3).
6. Install nuts(5).

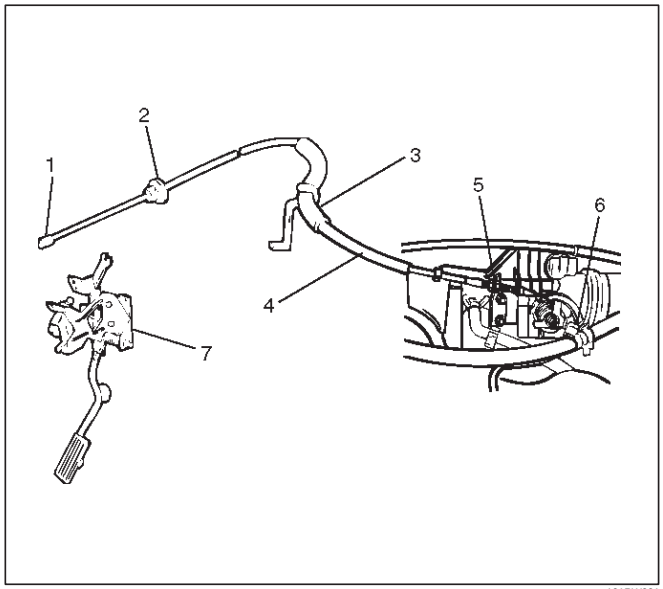

101RW001

NOTE:

- Don’t need accelerator pedal cable adjustment.

Accelerator Pedal

Accelerator Pedal and Associated Parts

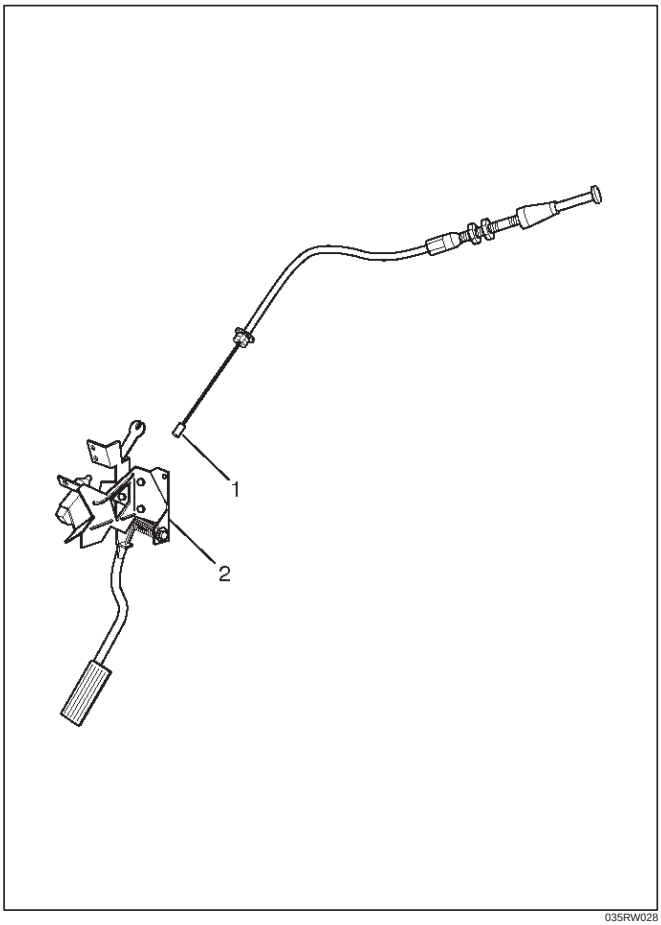

035RW028

Legend

(1) Accelerator Pedal Control Cable
(2) Accelerator Pedal Assembly

Removal

1. Accelerator Pedal control cable(1).
2. Accelerator Pedal assembly(2).

Installation

1. Accelerator pedal assembly(2).
2. Accelerator Pedal control cable(1).

ENGINE

INDUCTION (6VD1 3.2L)

CONTENTS

Service Precaution 6J–1
Air Cleaner Element 6J–2
Removal 6J–2
Inspection 6J–2
Installation 6J–2

Service Precaution

WARNING: THIS VEHICLE HAS A SUPPLEMENTAL RESTRAINT SYSTEM (SRS). REFER TO THE SRS COMPONENT AND WIRING LOCATION VIEW IN ORDER TO DETERMINE WHETHER YOU ARE PERFORMING SERVICE ON OR NEAR THE SRS COMPONENTS OR THE SRS WIRING. WHEN YOU ARE PERFORMING SERVICE ON OR NEAR THE SRS COMPONENTS OR THE SRS WIRING, REFER TO THE SRS SERVICE INFORMATION. FAILURE TO FOLLOW WARNINGS COULD RESULT IN POSSIBLE AIR BAG DEPLOYMENT, PERSONAL INJURY, OR OTHERWISE UNNEEDED SRS SYSTEM REPAIRS.

CAUTION: Always use the correct fastener in the proper location. When you replace a fastener, use ONLY the exact part number for that application. ISUZU will call out those fasteners that require a replacement after removal. ISUZU will also call out the fasteners that require thread lockers or thread sealant. UNLESS OTHERWISE SPECIFIED, do not use supplemental coatings (Paints, greases, or other corrosion inhibitors) on threaded fasteners or fastener joint interfaces. Generally, such coatings adversely affect the fastener torque and the joint clamping force, and may damage the fastener. When you install fasteners, use the correct tightening sequence and specifications. Following these instructions can help you avoid damage to parts and systems.

Air Cleaner Element

Removal

1. Remove positive ventilation hose connector(1).
2. Remove intake air temperature sensor(2).
3. Remove air cleaner duct assembly(3).
4. Remove air cleaner element(4).

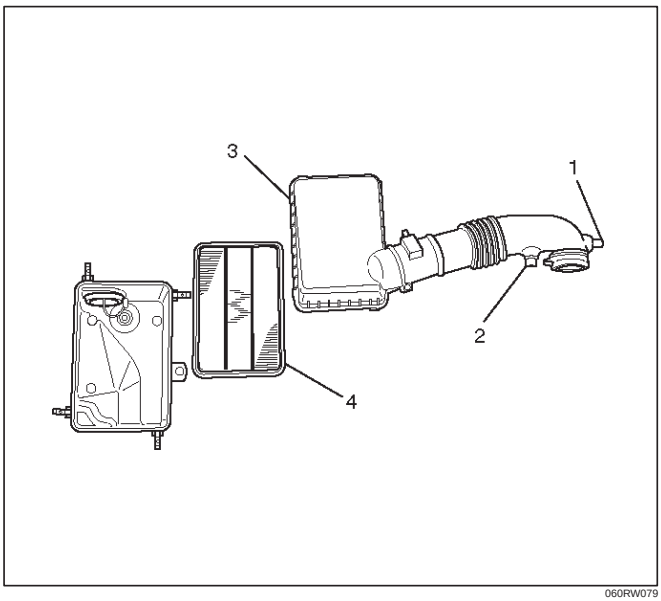

060RW079

Inspection

Check the air cleaner filter for damage or dust clogging. Replace if it is damaged, or clean if it is clogged.

Cleaning Method

Tap the air cleaner filter gently so as not to damage the paper filter, or clean the element by blowing with compressed air of about 490 kPa (71 psi) from the clean side if it is extremely dirty.

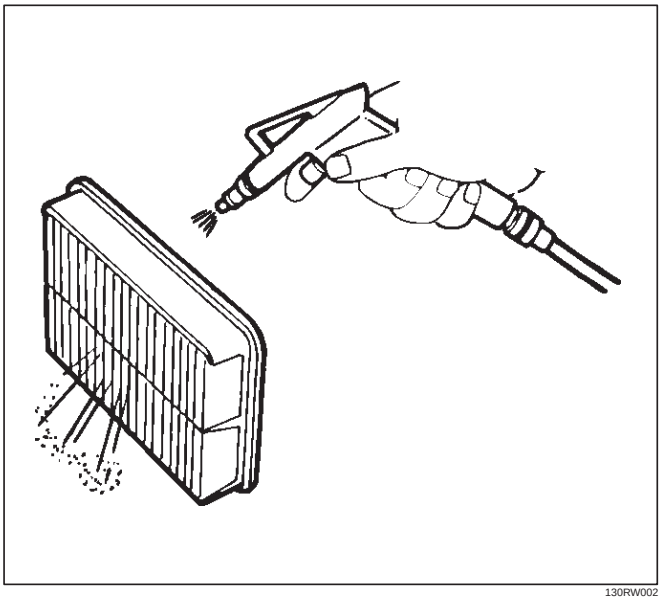

130RW002

Installation

1. Install air cleaner element(4).
2. Attach the mass air cleaner duct cover to the body completely, then clamp it with the clip(3).
3. Install air temprature sensor(2).
4. Install positive crankcase ventilation hose connector(1).

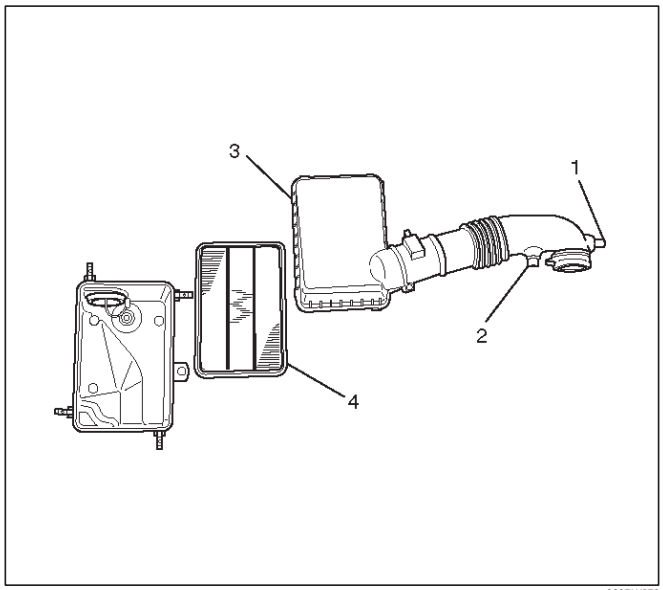

060RW079